RC-96 Repeater Controller

Owner's Manual

Advanced Computer Controls, Inc.

Notice and Warnings

This equipment generates, uses, and can radiate radio frequency energy and if not installed and used in accordance with the instruction manual, may cause interference to radio communications. It has been tested and found to comply with the limits for a Class A computing device pursuant to Subpart J of Part 15 of FCC Rules, which are designed to provide reasonable protection against such interference when operated in a commercial environment. Operation of this equipment in a residential area is likely to cause interference in which case the user at his own expense will be required to correct the interference.

Specifications subject to change without notice.

Version 5!
For the '96 and '85

Introduction
The new Version 5 firmware for your RC-96 or RC-85 Repeater Controller adds the following exciting features:

- **Time of day clock and calendar**
- **Scheduler**
- **Expanded vocabulary – FEMALE and sound effects**
- **Support for an HF remote base**
- **Miscellaneous additions and improvements**

These features are easily added to your existing Version 3 or Version 4 controller by simply plugging them in!

Description
The **time of day clock and calendar** is set with Touch-Tone programming commands, and is battery backed up to keep it running even if your controller loses power. You can choose 12 hour a.m./p.m. or 24 hour military format. Several time and date "run time variables" are like synthesized speech vocabulary, but instead of being fixed words, these variables say the time, date, a.m. or p.m., the day of the week, and morning/afternoon/evening when programmed into messages. These run time variables can be included in any messages (IDs, tail messages, bulletin boards, etc.) using the message editor.

The **scheduler** works in conjunction with the time of day clock and your existing macro sets. It relieves you of the chore of repetitively manually selecting different macro sets at different times of the day and days of the week. It's like an automatic control operator. With programming commands, you select the time and days (every day, weekends only, etc.) for automatic changeover of macro sets to automatically control everything from Control Op settings to remote bases and user function outputs.

We've added a new voice to your controller to announce the time – and *she'll* really perk up your repeater. She often goes by the name Juliet, and she joins Romeo in her new duties. Technically, Juliet is the **female synthesized speech** vocabulary, and along with some sound effects we've added, she brings the total vocabulary size of your controller to 535.

Many people have asked for the ability to hook up an **HF remote base** transceiver to their repeater so they could work HF from their handhelds. Now you can! The '85 and '96 controllers each have one link or remote base port, and now an HF radio can be connected to that port. (If you're already using

your link port for a fixed frequency, BCD, or FC-900 remote, the HF function is not available). With the '96 controller you'll need to add a low cost serial port board available from ACC. The '85 controller will connect to the HF radio as-is.

We selected the Kenwood TS-440S HF transceiver because of its clean interface and its popularity. You'll have a basic subset of control functions – frequency, mode, memory recall, and scan (not loading memories, operating the antenna tuner, controlling a rotor, etc.). The TS-440S is the **only** radio that we plan to support – if you like ICOM or Yaesu, try Kenwood! (We like all three! – we just don't support the other HF radios.) And if you have another in Kenwood's series, you may want to try it, but we've done all our testing with the TS-440S.

Finally, as our controller firmware continues to evolve, we've made a number of **miscellaneous additions and improvements** based on feedback from owners and users. The details are outlined at the end of this note.

WARNING: The field installation of the upgrade involves **some risk** – if you don't follow the instructions precisely, or if there is a mechanical problem such as a bent pin, it may be necessary to return the controller to ACC for repair. We've done everything possible to make the upgrade easy to install. ACC offers to perform the installation at no charge (except return shipping). If you would like us to perform the upgrade, return your controller and the upgrade kit to ACC *before attempting installation.* If you choose to perform the installation in the field, please recognize the small but finite risk.

WARNING: Version 5 firmware **requires 8Kx8 of E²PROM**. All RC-96 controllers are equipped with the necessary 8Kx8. *Very old RC-85 controllers* (shipped approximately before February, 1987, S/N 696) may have only 2Kx8 of E²PROM. If your old '85 contains a 2815, 2816, or 2817A at socket U27, then you need to upgrade the E²PROM to a 28C64. Contact the factory for availability before attempting the installation.

WARNING: If you connect your controller to a Kenwood TS-440S transceiver, we strongly recommend lightning protection for your repeater and site to avoid damage to the expensive HF radio.

WARNING: If you connect your controller to a Kenwood TS-440S transceiver and plan to operate ten meters, be aware that RF emissions from the RC-85 controller may require additional shielding and filtering for effective operation. See Chapter 10 of the RC-85 Manual for suggestions.

WARNING: Do not tamper with the label on either supplied module. ***Tampering with the labels will void all warranties.***

Installation

The Version 5 upgrade consists of two modules which plug into existing sockets on your controller. They include the new EPROM program memory which contains the Version 5 firmware, and a time of day clock and calendar with its built-in lithium backup battery.

RC-96 Repeater Controller

1. If your RC-96 controller has a Tone Panel option, disable Touch-Tone Access Mode (COP 53) and select Carrier Access (COP 07). Unlock the controller and store these selections in Macro Set 1 before installing the new firmware. This will enable you to reprogram the Tone Panel information as required after installing the new firmware.

2. Remove power from the controller. Be sure that any backup battery is also removed from the controller before performing the following steps. Remove the top cover by removing the six side screws.

3. CAREFULLY, with the supplied IC extractor, remove the integrated circuit at location U29. Replace it with the U29 chip supplied with the upgrade (oriented so that the pin 1 notch on the chip matches the notch on the pc board).

4. CAREFULLY remove the integrated circuit at location U34. This chip will no longer be needed, and the socket at U34 will be left empty.

5. CAREFULLY remove the integrated circuit at location U31 – save it for later use in this step. Replace it with the clock module supplied with the upgrade. Now plug in the chip you just removed into the socket on the top of the clock module.

6. You should now have left over the original U29 and U34 chips from your controller. Go back over the last steps FOR THE '96 CONTROLLER, and be sure that the chips are plugged into their sockets in the proper orientation and with no bent pins.

7. Power up the controller – it should sign on with the V5.x message. Proceed to program the new functions of the controller as described in the next sections.

RC-85 Repeater Controller

CAUTION: You must either have an 8Kx8 E^2PROM at location U27 or have obtained an 8Kx8 E^2PROM from ACC before performing the installation. If the chip at U27 is a 9864 or 28C64A or other part number ending with 64, then you may proceed. If the chip is a 2815, 2816, or 2817A (not ending in 64) then you must purchase an E^2PROM upgrade from ACC before attempting the installation. Call the factory to order the part.

1. Remove power from the controller. Be sure that any backup battery is also removed from the controller before performing the following steps. Remove the top cover of the '85 enclosure or otherwise gain access to the top of the printed circuit board.

2. CAREFULLY, with the supplied IC extractor, remove the integrated circuit at location U28. Replace it with the U28 chip supplied with the upgrade.

3. CAREFULLY remove the IC at location U27 – save it for possible later use in this step. Replace it with the clock module supplied with the upgrade.

Now, if the chip that you just removed is a 9864 or 2864 or something else 64, then plug it back into the socket on the top of the clock module. If the chip that you removed is a 2815, 2816, or 2817A, then plug in your new 28C64A obtained separately into the socket of the clock module.

4. You should now have left over the original U28 chip from your controller, and possibly the 2815/16/17 chip. Go back over the last steps FOR THE '85 CONTROLLER, and be sure that the chips are plugged into their sockets in the proper orientation and with no bent pins.

5. Power up the controller – it should sign on with the V5.x message. Proceed to program the new functions of the controller as described in the next sections.

Initial Selections, Programming, and DIP Switches

After powering up the controller with Version 5 firmware, be sure to do the following programming and selection steps to avoid unexpected difficulties. See the appendices for command summaries.

Control Op (Control Op root codes shown)

Disable the scheduler until you program the setpoints that you want – 102.

If you have an FC-900 Interface connected to your controller, enable Link 2 if you have more than one band unit – 105. Otherwise, disable Link 2 – 106.

Disable the HF Remote Base until and unless you connect a TS-440S – 108.

Re-select your Reverse Patch Mode 0-4 – 54, 55, 56, 67, or 109 (new).

If your RC-96 controller has a Tone Panel option, enable tone encode (if programmed as encode and desired on) – 81.

Programming (Programming commands shown)

Program your Control Op setup in macro sets so that what you've selected above isn't undone when you select a new macro set – *5911-*5915.

Program Link COS to be high true (previous fixed condition) – *5411.

If you have an FC-900 Interface connected to your controller, indicate which band units are present and which are absent – *530B P.

If you have not connected a TS-440S HF transceiver to your controller, program an empty HF Command Prefix – *5020.

Program the five Permitted Area Codes as empty messages except for the ones you intend to use (i.e. 1-800, 1-408, etc.) – *1126-*1130.

When programming setpoints for the first time, zero out all unused setpoints by loading all zeros – *420S 0 0 0 00 00 1.

If your '96 has a Tone Panel option, reprogram all tone panel selections.

DIP Switch Summary

RC-85 Controller	UF 1-3 directly at logic connector – 4,5,6=OFF, 7=ON Single channel link – 4,7=ON, 5,6=OFF Synth. link/remote and expanded UF – 4,5,7=ON, 6=OFF Glitch-free synth. ... – 4,5,6,7=ON FC-900 – 4,5,6=ON, 7=OFF HF Remote Base – 4=ON, 5,6,7=don't care
RC-96 Controller	UF 1-3 directly at R/C connector – 4,5,6,7=OFF Synth. link/remote and expanded UF – 4=ON,5,6,7=OFF FC-900 – 4,7=ON, 5,6=OFF

Operation

This section describes the operation of the various new features in Version 5. The new command codes (programming, control operator, and user) are also summarized later.

Clock / Calendar

The clock and calendar serves several purposes – the time can be played on request by entering a Demo user command; the time, date, and day of week can be included in any programmable message using the message editor; the time and day of week drive the scheduler which automatically selects macro sets.

Decide if you want your clock to operate in 12 hour format (a.m. and p.m.) or 24 hour format (military time). Set the time using *one* of the following two **programming commands** (entered with the controller *unlocked*). The command you chose will determine the format. It will also be necessary to load the scheduler setpoints below using the *same* format.

Set Time (12 hr mode) *4100 AP H10 H1 M10 M1
Set Time (24 hr mode) *4100 H10 H1 M10 M1
AP: 1 = p.m., 0 = a.m. (12 hour mode only)
H10: tens hours, H1: ones hours, M10: tens minutes, M1: ones minutes

Example: It's 2:53:05 p.m. To set the clock using 12 hour mode, wait until nearly 2:54 and enter the command (with the controller unlocked) *4100 1 0254 and unkey. Time your command entry so that you unkey at 2:54:00 if you want to set the clock precisely.

Set Date *4101 M10 M1 D10 D1 Y10 Y1
M10: tens month, M1: ones month, D10: tens day, D1: ones day, Y10: tens year, Y1: ones year

Example: The date is April 1, 1991. To set the calendar, enter the command (with the controller unlocked) *4101 04 01 91.

Set Day of Week *4102 DOW
DOW (day of week):

0 = Sunday	4 = Thursday
1 = Monday	5 = Friday
2 = Tuesday	6 = Saturday
3 = Wednesday	

Example: It's Friday (thank goodness). To set the day of week to Friday, enter the command (with the controller unlocked) *4102 5.

The current time of day can be played by users with the demo **user command** below.

Say Time of Day [Demo Prefix] 9

Scheduler

The scheduler works with your existing five macro sets, the new clock / calendar, and "setpoints" which you can program to tell the controller when to change over to a new macro set. The automatic selection of macro sets by the scheduler is identical to your manual selection using the Macro Set Select Control Operator command.

You've programmed the clock above, and this section gives programming information for setpoints.

There is room for ten setpoints which you can fill in as needed to arrange your "schedule". Each setpoint specifies certain information relating to the changeover. The day of the week can be a specific day (Monday, etc.), weekends (Saturday, Sunday), all weekdays (Monday through Friday), or every day of the week. You can also optionally specify an nth day of the month – i.e. third Monday of each month. The time for the changeover is defined by hours and minutes. Finally, the macro set to be loaded at the changeover is specified in the programming command shown below. Use the **programming command** below based on the 12 or 24 hour mode you selected when setting the clock.

Define setpoint (12 hr mode) *420 S Nth DOW AP H10 H1 M10 M1 M#
Define setpoint (24 hr mode) *420 S Nth DOW H10 H1 M10 M1 M#

S: Setpoint 0-9. Ten setpoints can be programmed. To erase a setpoint, enter all zeros for the setpoint and any macro set (like macro set 1, i.e. *420 S 0 0 0 0000 1).
Nth: The 1st, 2nd, 3rd, 4th, or ANY day of week of the month.
0 = ANY 1 = first 2 = second 3 = third 4 = fourth
DOW (day of week):

0 = Sunday	5 = Friday
1 = Monday	6 = Saturday
2 = Tuesday	7 = everyday
3 = Wednesday	8 = weekdays
4 = Thursday	9 = weekends

AP: 1 = p.m., 0 = a.m. (12 hour mode only)
H10: tens hours, H1: ones hours, M10: tens minutes, M1: ones minutes
M#: Macro set # 1-5

Example: Select macro set #3 every weeknight at 11:00 p.m. Use setpoint #5. The clock is in 12 hour mode. Enter the command (with the controller unlocked) *420 5 0 8 1 11 00 3.
Be sure you have selected the format you want to use (12 or 24 hour) using the Time command. *You must define setpoints using the same format as selected for the time.*

The following new **Control Operator** commands relate to the scheduler. The currently selected macro set number can be read back. The scheduler can be turned on and off, and the on/off status of the scheduler can be read back.

100	1-5	**Interrogate Current Macro Set**
101	S on	**Scheduler On†**
102	S off	**Scheduler Off†**
103	on/off	**Interrogate Scheduler On/Off**

Female and Sound Effects Synthesized Speech

Thirty-two female words, 10 male words, and 8 sound effects are added to the vocabulary list. In addition, five "run-time variables" can be programmed into messages to play time and date related information as part of the messages. The vocabulary additions along with their message editor codes are shown below and in the programming summary.

Female

oh	*800	twelve	*812	good	*834
one	*801	thirteen	*813	morning	*841
two	*802	fourteen	*814	afternoon	*842
three	*803	fifteen	*854	evening	*843
four	*804	sixteen	*864	the	*821
five	*805	seventeen	*874	time	*822
six	*806	eighteen	*884	is	*823
seven	*807	nineteen	*894	o'clock	*824
eight	*808	twenty	*820		
nine	*809	thirty	*830		
ten	*810	forty	*840		
eleven	*811	fifty	*850		

Male

crane	*950	gauge	*961	pico	*932
device	*953	micro	*931	valve	*941
electrician	*943	mill	*971		
farad	*930	passed	*974		

Sound Effects

crowd	*892	tic	*860
explosion	*891	toc	*870
laser	*873	train	*883
phaser	*882	whistle	*881

Run-Time Variables

morning/afternoon/evening	*844 (female)
current time	*872 (female)
current a.m./p.m.	*832 (female)
current date	*833 (female)
current day of week	*871 (male)

HF Remote Base

A Kenwood TS-440S HF transceiver can be connected to the controller and can be operated remotely through the repeater. Installation instructions for the transceiver are shown later in this note. This section describes the commands which relate to operation of the HF remote.

The HF remote base gets its own user command code prefix. The **programming command** for selecting the user level HF Prefix is:

*5020 (prefix)

Example: Select HF remote base prefix as 1. Enter the command (while unlocked) *50201.

The **Control Op** can enable and disable the HF remote base:

107	HF Remote Base Enabled†	HE
108	HF Remote Base Disabled†	HD

The HF remote can be put into Receive Only, Receive/Transmit, and can be turned Off by users. In addition, frequency, mode, and memories can be selected. The **user commands** for these functions are:

Receive Only	[HF Prefix] 1
Receive/Transmit	[HF Prefix] 2
Off	[HF Prefix] 3
Frequency Interrogate	[HF Prefix] 8
Frequency Enter	[HF Prefix] (10M)M*HT(O(h(t))))

Examples (assuming HF Prefix = factory default value of 1):

14.23 MHz = 1 14*23	3.89551 MHz = 1 3*89551
7.255 MHz = 1 7*255	21.3 MHz = 1 21*30

Bump Up 100 Hz	[HF Prefix] 6
Bump Down 100 Hz	[HF Prefix] 4
Bump Up 500 Hz	[HF Prefix] 9
Bump Down 500 Hz	[HF Prefix] 7
Bump Up 20 Hz	[HF Prefix] A
Bump Down 20 Hz	[HF Prefix] B

Example (assuming HF Prefix = factory default value of 1): Bump HF frequency up 100 Hz: 1 6

Scan Down Slow	[HF Prefix] 7 1
Scan Up Slow	[HF Prefix] 7 3
Scan Down Medium	[HF Prefix] 7 4
Scan Up Medium	[HF Prefix] 7 6
Scan Down Fast	[HF Prefix] 7 7
Scan Up Fast	[HF Prefix] 7 9
Scan Stop	Carrier (key down VHF/UHF radio)

Example (assuming HF Prefix = factory default value of 1):
Scan up medium: 1 7 6. Stop scanning: key your radio.

Mode [HF Prefix] 1 (mode 1-4)

Mode: 1=USB, 2=LSB, 3=AM, 4=FM

Examples (assuming HF Prefix = factory default value of 1): USB = 1 1 1 LSB = 1 1 2

Memory [HF Prefix] 5 (00-99)

Note: Memories must be *preprogrammed* into the HF transceiver.

VFO A [HF Prefix] 5

Example (assuming HF Prefix = factory default value of 1): Select memory 54 which has been preprogrammed into the radio. Enter 1 5 54. To return the HF radio to VFO A, enter 1 5.

Tone Panel CTCSS Regeneration ('96 Only)

The existing Tone Panel programming commands are expanded to provide for several modes of regeneration of the incoming tone. Previously, only a fixed tone could be encoded. As a reminder,tone #1 must be programmed as encode (unlocked, *5100 1) in order to regenerate.

*5101 39	Regenerate incoming tone only while mobile present
*5101 40	Regenerate incoming tone until repeater carrier drops
*5101 41	Regenerate incoming tone only while mobile present (lockout others until repeater carrier drops)
*5101 42	Regenerate incoming tone until repeater carrier drops (lockout others until repeater carrier drops)

Tone position 2 is encoded continuously during phone patches (reverse patches and patches made by the mobile) in all four regenerate modes.

Example: We have four decode tones installed in positions 2-5. Encoder at position 1 should regenerate the incoming tone only while the mobile is present, and the controller should not respond to other incoming tones until the repeater carrier is allowed to drop. Enter the command (with the controller unlocked) *5101 41.

Autopatch Toll Restrict Enhancement

In order to better accommodate densely populated locations where area codes are being split, five "Permitted Area Codes" have been added. These are entered as *messages* (either Morse or speech), i.e. "1415", "301", "1800".

In addition, "local calls" can be defined as maximum seven *or* eight digit (permitting "1"+7 digit calls while preserving 10 and 11 digit toll call protection). The 7 or 8 is programmed as a one character *message.* See the message list in Appendix C, *Programming Commands.*

Don't Answer Telephone For Two Minutes

A new Control Op command – "Don't answer for 2 minutes" – makes it more convenient to share the '85/'96 phone line with an '850 and modem. See Appendix B, *Control Operator Commands.*

Interrogating Autodial Numbers

Telephone numbers stored in Autodial locations can be read out without dialing the number, including from the phone. See Appendix A, *User Commands.*

Installation of the HF Remote Base

In addition to your RC-85 or RC-96 Repeater Controller, you need:

From Kenwood:
Kenwood TS-440S
IC-10 IC kit (Intel or equivalent 8251A, RCA or equivalent CD4040B)
You do not need the IF-232C level translator.

From ACC:
For the RC-96 only, Serial Port Board (available from ACC)

Connections
The interconnections between the controller and the TS-440S include transmit audio, receive audio, push-to-talk (RC-96 only), and serial port for control. A COS or squelch signal may be used but is not readily accessible from the radio.

Be sure to install the '96 Serial Port Board as indicated in the instructions supplied with it to generate the Serial Out signal.

'85	'96	TS-440S
Tx Audio (J4-8)	Tx Audio (LINK-6, green)	AFSK IN
Link Rx Audio (J4-6)	Link Rx Audio (LINK-7, blue)	AFSK OUT or speaker jack
–	PTTL (LINK-4, orange)	PTT (ACC2 jack pin 13 or REMOTE "From standby switch"
CX3 (J3-11)	Serial Out (CNTL RX-6, green)	Serial Input (ACC1 jack pin 3, bottom pin)

For the RC-85 controller, DIP Switch 4 must be ON.

With the controller unlocked, program an HF command prefix (*5020 prefix). Assuming you are not using a COS, program the Link COS Logic Sense to "low true" (*5410). Enable the HF remote base with the Control Op command (prefix) 107.

With the HF remote turned on (see User Command summary), set link receive level on the controller ('96 = LRX, '85 = R2), and the mic gain on the TS-440 for HF transmit level.

Miscellaneous Improvements

The following changes have been made in V5 firmware.

• Reverse patch mode 4 is added which places the caller directly on the air. The caller can enter Touch-Tone # during the first five seconds to revert to mode 0 and be taken off the air for the remainder of the call. (# must be the first Touch-Tone digit entered.) Otherwise, after five seconds, the Touch-Tone decoder switches to the receiver to give the mobile Touch-Tone control over the radio-telephone interconnection.

• Control Operator command 110 causes a modulo 256 "keyup counter" to be spoken, which can provide rough information about repeater usage. The counter is cleared by the Control Operator Reset command.

• VHF/UHF remote base frequency readback can be inhibited when * is left out as a decimal point.

• Loading autodial locations from the phone automatically extends the telephone timer so the controller won't hang up.

• Band units not present in your IC-900 "stack" can be locked out from selection to avoid potential confusion. See Appendix C, *Programming Commands*.

• When using the FC-900, Link 2 can be disabled if you have only one band unit to avoid confusion. See Appendix B, *Control Operator Commands*.

• Bands can be swapped without Link 2 unit needing to be on.

• A band unit cannot be selected for both Link 1 and Link 2.

• If Control Receiver COS becomes active while someone is controlling on the phone, control is returned properly to the phone after COS becomes inactive.

• The cover tone is automatically disabled if a user manually selects full duplex.

• Spare audio is properly muted by a signal on the repeater receiver.

• The unlock timer has been changed from one minute to two minutes.

• The speech letter "S" can be included in the Patch Dialing Prefix to generate Touch-Tone "*".

• RC-96 controller Tone Panel only ... Control Operator commands 81 and 91 turn encode on and off (previously enabled and disabled decode only). The state is stored in macro sets along with other setup information.

Contents

1 **Introduction and Specifications** 1

2 **Hookup to Your Repeater** 7
- Introduction 7
- Interface Signals Required 8
- Power 8
- Trying it Out 8
- Carrier-Operated-Switch 9
- Push-to-Talk 10
- Receiver Audio 10
- Transmitter Audio 11
- Telephone Line 12
  - FCC Notice to User 12
- Setting DIP Switch Options 13
- Setting Audio Levels 13

3 **Command Code Structure** 15
- Introduction 15
- User Commands 16
- Control Operator Commands 16
- Programming Commands 17
- Command Evaluation 17
- Special Keys 18
- Command Decoder Timers 19

4 **How to Command the User's Features** 21
- Introduction 21
- Touch-Tone Pad Test 21
- Autopatch and Autodial 22
  - Activating the Autopatch 22
  - Hanging Up the Patch 23

Patch Redial 24
Defining Your Own Custom Hangup Code 24
Selecting the Cover Tone for Semi-Private Patch 25
Selecting Full Duplex 25
Extending the Patch Timer 26
Loading and Erasing the User Loadable Autodialer 27
Activating the User Loadable Autodialer 29
Activating the Emergency Autodialer 30
Reverse Patch 31
Bringing Up the Reverse Patch from the Phone 31
Answering the Reverse Patch Over the Air 32
Extending the Telephone Timer 32
Reading Information 33
Reading Back Your Signal Strength 33
Commanding the Demo Messages and Bulletin Board 33
Linking and Paging 34
Bringing Up the Link / Remote Base (Crystal and BCD-Controlled Radios) 34
Bringing Up the Link / Remote Base (FC-900 Interface) 35
Unmuting Touch-Tone 37
Activating Pocket Pagers and Selective Call Decoders 37
Two-Tone Paging 38
Other Activities 39
Taking the Touch-Tone Access Mode Up and Down 39
Activating the Spare Audio Function 39
Commanding the Remote Control Output Functions 40

5 How to Be A Control Operator 41
Introduction 41
Control Operator Commands 41
Macro Set Selection 41
Repeater Enable / Disable 42
Repeater Timer 42
Access / Control and Tone Panel 43

User Command Enable / Disable 44
Link Enable / Disable 45
Autopatch / Autodial 45
Reverse Patch 47
ID 48
Tail Message 48
Alarm Enable / Disable 48
Speech Synthesizer 49
Kerchunker Filter Enable/Disable 49
Touch-Tone Mute/Unmute 49
Zero Hang Time Mode Enable/Disable 50
Low Courtesy Tone Select 50
Initialize 50

6 Programming the Controller 51
Introduction 51
Unlocking and Locking 51
Programming the Unlock Code 52
Messages 52
Tone Parameters 56
Courtesy Tone Selection 57
Timers 57
Command Code Prefixes 58
Emergency Autodial Numbers 59
Miscellaneous Selections 59
Store Macro Sets 60
Pager Memories 60
Tone Panel Frequencies 62

7 General Operation 63
Introduction 63
Command Channels 63
Control Over the Telephone Line 64
Access 65
ID Timing and Selection 66
Courtesy Tone 67
Tail Messages 68
Timeout Timer 68
Touch-Tone Muting 69
Noise and Kerchunker Filtering 69

8 Hookup to Other Equipment 71
- Introduction 71
- CTCSS Decoder 71
- Talking S-Meter 72
- Control Receiver 73
- Site Alarm 74
- Remote Control Outputs 75
- Expanded Remote Control Outputs 75
- Link / Remote Base 77
  - BCD Frequency Interface 77
  - FC-900 Interface 78
- Spare Audio 81
- External Tape Player 81
- Digital Voice Recorder 82
- Sharing the Phone Line 83

9 How It Works 85

10 In Case of Difficulty 89
- Maintenance 89
- Servicing 89
- General Checklist 90
- Trouble-shooting Chart 90
- Most Often Asked Questions (and Answers) 91

A User Command Code Summary 95

B Control Operator Command Summary 99

C Programming Command Summary 103

D Programming Sheets 117
- Factory Presets 117
- Custom Configuration 120

E Messages 127
- Tones 127
- Morse Code 128
- Sythesized-voice Messages 128

F Hardware Connections and Adjustments 133
Figure F-1 RC-96 Front Panel 133
Figure F-2 RC-96 PC Board Locations 133
Figure F-3 RC-96 Rear Panel 133
Figure F-4 Eight-pin DIN Connector Pinout 134
Table F-1 List of Connections and Adjustments 134
Table F-2 DIP Switch Descriptions 135
Table F-3 DIN Connector Pinouts 136
Table F-4 Interface/Connector Cross-reference 136
Table F-5 Connector Pin Functional Descriptions 137

G Schematic 139

H AD-2 Audio Delay Board Kit Option 143
Description 143
Installation 144
Adjustments 144
Schematic 146

I CTCSS Tone Panel Option 147
Introduction 147
Installation 147
Programming 148
Control Operator Selection 148
Schematic 149

Glossary 151

Index 157

Chapter 1

Introduction and Specifications

The RC-96 Repeater Controller is a complete control system for conventional private two-way radio repeater stations. It provides everything needed between the repeater's transmitter and receiver. The controller serves the traditional repeater control requirements and provides a host of additional capabilities which make your repeater more useful. It introduces the concept of remote programming, which permits changing the repeater's characteristics from anywhere using Touch-Tone commands.

For example, programming an IDer previously involved constructing a diode-matrix read-only memory to form the dits and dahs of Morse code. The RC-96 controller, on the other hand, allows you to edit ID messages with your Touch-Tone pad and store them in the controller's non-volatile memory. But that's just part of the story – your repeater can talk to you! The IDs can be in natural-sounding synthesized speech so your users don't have to be CW buffs to understand what the repeater is saying. Add to that the RC-96 controller's custom repeater-oriented speech vocabulary of nearly 500 words, and you can easily construct informative ID messages for your repeater's users.

If there's a meeting today at 4 o'clock, one of the IDs can say, "Meeting today at 4, WA6AXX, Repeater." Or on Fridays say, "TGIF, from WA6AXX, Repeater." Or change the ID messages for special events using any of the words in its large vocabulary, in seconds, from anywhere, using your Touch-Tone pad.

The autopatch built into the RC-96 controller is second in capability only to ACC's RC-850 controller. Gone are the days of wrong numbers because of a fluttery signal or marginal decoding. No more fumbling to enter an access code, then the phone num-

ber, while you're trying to drive down the freeway. The RC-96 controller's built-in autodialer lets you dial stored numbers with simple two digit commands. Just tell it what autodial location you want, then the controller goes offhook, waits for dial tone, and dials the number for you in Touch-Tone or dial pulse. If the number you want isn't in one of the autodialer's 200 slots, enter the number as part of the patch command and it will be read back to you (in voice) to make sure you've entered it correctly before it dials!

The controller's support of synthesized remote base operation allows linking your repeater to other repeaters accessible from your site, extending the range of your system and making your radio equipment more valuable. CTCSS access and control and a Touch-Tone access mode provide security and protection from interference. Two-tone, five-tone, and DTMF paging offer selective calling through your repeater to standard pocket pagers, which means users don't have to be listening to be available.

Remote programming is the key to the flexibility and power of the RC-96 controller. Its Touch-Tone command set allows remote reprogramming of messages, autodial numbers, command codes, and more. The remotely programmed information is stored in a reliable E^2PROM, which combines the data integrity of a PROM with the flexibility of in-system reprogramming. No information is lost when power fails. And it isn't necessary to reprogram your controller when you upgrade the software.

The RC-96 controller is fully compatible with ACC's Digital Voice Recorder. The DVR lets you remotely record the various programmable messages in your '96. It also provides voice mailbox capability for your users, from over the air and over the phone. The '96 and DVR make an unbeatable pair!

This is just a sampling of the capability of the RC-96 Repeater Controller – read on to find out the whole story.

Specifications

Microprocessor	8085AH
Memory	Total 96K byte EPROM – 80K byte E^2PROM – 8K byte RAM – 8K byte
Logic Inputs	Low 0 to 0.8 volts High 2.4 to 15 volts COS, Link COS, Control Receiver COS, CTCSS, Courtesy Tone select, Site Alarm, Phone Line Busy
Logic Outputs	Open collector, 60V, 500mA PTT, Link PTT, Control Outputs (3, expandable to 8), Phone Line Busy
Audio Inputs	Receiver, Link Receiver, Control Receiver, Spare (adjustable levels)
Audio Outputs	Transmitter Audio (adjustable level)
Operating Temperature	-15 to +55° C
Power	11.5 to 15V, 250 mA
Cabinet Size	19" rack mount, 1.75" high, 7" deep

Standard Features

Complete stand-alone repeater controller

Two-year warranty includes coverage for damage caused by lightning

Remotely programmable with Touch-Tone commands

- Messages – 25 ID's, tails, Bulletin Boards, phone answer, etc.
- Morse code parameters – Speed – 12-30 WPM; Pitch – dc-3000 Hz
- Control Op and user command codes (20 prefix groups, up to 7 digits each)
- Courtesy tone selection (from 10 predefined sets)
- Timers – 16 sets, 0-30 minute with 1 second resolution
- Autodialer numbers (200)
- Pager memories (1000)
- Non-volatile E^2PROM storage (no batteries)

Natural sounding speech synthesizer for effective user/repeater interface

- Custom two-way/ham/repeater/public service vocabulary of 485 words
- Letters, numbers, phonetic alphabet
- Days of the week, months of the year, weather, emergency, and public service words
- Amateur radio terms – club, net, meeting, hamfest, etc.
- Easy to use interactive message editor

Autopatch / Autodial

- FCC registered telephone interface
- Store/forward, DTMF or rotary
- Full or half-duplex

- Optional phone number readback for confirmation before dialing
- User Loadable Autodial (190 numbers)
- Emergency Autodial (10 numbers) with message readback
- Toll restrict – leading 1/0 and digit count
- Cover tone for semi-private patches
- Programmable overall timers and activity timer with warning warble
- Paging, ringout, control from the telephone line
- Three-terminal gas discharge tube for effective lightning protection

Reverse patch
Talking S-Meter for user signal strength readings from the repeater
Paging – two-tone sequential, five-tone sequential, DTMF; 1000 pager memories
Remote base transceiver control – commandable frequency and offset
CTCSS access and control modes (with Tone Panel option or external CTCSS decoder)
Touch-Tone access mode with programmable timeout
Control of repeater from telephone
Remote control logic outputs – 3 expandable to 8
Low distortion computer synthesized tone generation
Courtesy Tones – 10 selectable sets
Noise and kerchunker filtering
Touch-Tone muting
Control receiver provisions
Site alarm logic input
Intelligent ID algorithm – automatically selects from up to 7 programmable ID's
Tail messages – 3, programmable repetition rate
Command acknowledgement with unique messages
Low power, single supply operation with built-in battery backup circuitry
Attractive 19" rack mount enclosure
Front panel keypad and display, rear speaker jack for easy local programming (front panel display units only)
Proven reliability designed in, with watchdog timer, voltage monitoring circuitry, extensive lightning protection, conservative design
Compatible with ACC's Digital Voice Recorder
Owner's manual, "Getting Started" audio casette tape and free telephone technical support

Options

CTCSS Tone Panel (Encoder/Decoder) – up to 8 remotely selected tones from EIA standard 37 plus 97.4 Hz

AD-2 Audio Delay "Piggyback Board Kit" – to *fully* mute Touch-Tone and squelch tails through the repeater

FC-1 Frequency Control Board – for frequency control of BCD remote base transceivers and remote control output expansion

FC-900 Interface – for frequency control of the ICOM IC-9xx FM Mobile band units as remote bases or links and remote control output expansion

Chapter 2

Hookup to Your Repeater

Introduction

The RC-96 controller (Figure 2-1) is the new "brain" of your repeater, but to have its orders carried out it needs a few connections. It needs to know when there's a signal at the receiver's input, and it needs to be able to tell the transmitter when to turn on and off. The controller must be able to listen to audio from the receiver, both to hear Touch-Tone command codes you're sending it, and also to pass receiver audio on to the transmitter. And finally, since the controller has final say on what audio goes to the transmitter, it needs to connect directly to the transmitter's audio input.

Figure 2-1. RC-96 Front Panel

Since all the control functions are handled internally by the RC-96 controller, the only connections absolutely necessary to the rest of the system are these four basic signals plus power (Figure 2-2). Connecting a phone line to the controller lets you use the patch, reverse patch, telephone access paging and control from the phone. Other inputs and outputs allow you to build a "Super System" with a control receiver, remote base or crossband link, CTCSS operation, site alarm, Digital Voice Recorder, and remote control outputs. We'll go into these in Chapter 8, but for now let's just cover the basics.

Interface Signals Required

• **Power**	POWER jack or +12V and GND
• **Carrier-Operated-Switch**	REPEATER connector pin 1
• **Push-to-Talk (PTT)**	REPEATER connector pin 4
• **Receiver Audio**	REPEATER connector pin 7
• **Transmitter Audio**	REPEATER connector pin 6
• **Phone Line**	Modular jack and cord (supplied)

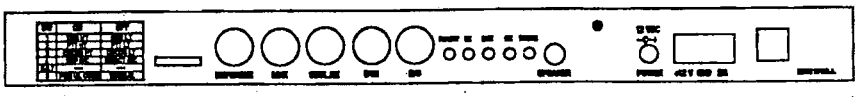

Figure 2-2. RC-96 Back Panel

Power

The RC-96 controller operates from a supply voltage of 11.5 to 15 volts DC at a current of 250mA. Low power, single supply operation means it's easy to provide the controller, along with the rest of your repeater, with battery backup to keep it available in case the primary supply goes away. It also means that primary power can be borrowed from the existing system 12 volt supply. Good system design suggests avoiding unnecessary duplication of power supplies in the repeater system, so it isn't necessary to dedicate a supply to the controller.

Inputs for your primary supply and an optional backup battery are provided at the "POWER" connector and at the terminal block "+12V" and "GND" terminals. The primary supply and optional battery can connect to either power input. The power inputs are diode isolated so that the battery is normally isolated from the load through a back biased diode until the primary supply goes away, at which time the battery instantly begins supplying the power. The battery is only necessary to continue *operation* of the controller – remotely programmed information is stored in non-volatile memory and *does not require battery backup*. The controller does not provide trickle charging to the battery.

Trying It Out

Before you hook up the RC-96 controller to your repeater, you may want to program the ID's, tail messages, Bulletin Boards, and other features, although these can easily be done later, remotely. The RC-96 Programming Sheet, showing the default messages, command code prefixes, tone parameters, and timers, can be found in Appendix D. Complete the blank Programming Sheets beginning on page 120 as you change or add messages, prefixes, parameters, etc.

Plug in an 8 ohm speaker into the external speaker jack on the rear panel and supply 12 volts to the unit (see "Power" above). The '96 will "wake up" and all the front panel LEDs will light up momentarily (on units with a front panel display). The "Power" indicator will stay lit and the '96 will say, "RC-96 Repeater Controller, Vx.x." While the '96 is talking, adjust the volume to a comfortable listening level using the volume control knob. The volume is fixed on units without the front panel display. Before you begin programming, do a Touch-Tone pad test by pressing

Touch-Tone Pad Test

5 (any sequence of keys) #

The 5 is the Touch-Tone pad test prefix and the # key acts as an enter key. The "DTMF" indicator will light up to verify that the tones are being decoded as each key is pressed. The controller will respond by saying the sequence of keys you entered. If the '96 does not respond, double check the power and speaker connections. Once you have verified that the Touch-Tone pad works, you can begin programming. See Chapter 6 – "Programming the Controller", for further details. Or you can wait until the controller is installed in your repeater and program the controller remotely.

Carrier-Operated-Switch

The output from the receiver which indicates that a signal is present is called COS, or carrier-operated-switch. It's a logic signal which is at a particular logic state when an RF signal is at the receiver's input, or the squelch is open, and at the opposite state when there is no RF signal and the squelch is closed. Most receivers designed for repeater service have such a logic output, called "COS", "COR", "squelch gate", or something similar. With other receivers, such as transceivers put into repeater service, it's necessary to find a usable logic signal for COS. Look after the FM detector, following the noise amplifier and rectifier in the squelch circuit, for a usable signal. Contact the receiver's manufacturer if you need help with your particular receiver.

Since COS signals from different receivers can vary in characteristics, the RC-96 controller is designed to accept a variety of logic levels and to accept "high true" and "low true" signals. The only requirements are that a logic low be less than 0.8 volts and a logic high be greater than 2.4 volts (up to about 15 volts). The COS input high impedance is approximately 10K ohms, so it isn't likely that it will load down the circuitry providing the COS signal. A DIP switch accessible from the rear allows selection of high or low true, based on what your receiver provides. For a high true COS, set DIP switch 1 ON; for low true COS, set it OFF.

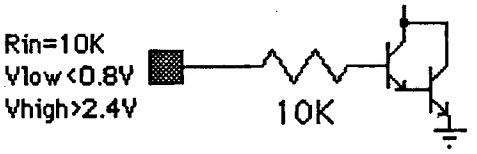

Figure 2-3. COS Input (REPEATER Connector, Pin 1, black)

Push-to-Talk

Transmitter keying is controlled by the controller. Any existing internal keying path in the repeater should be disconnected. The PTT (push-to-talk) signal is just as easy to interface to the transmitter as COS. The controller provides a solid-state switch closure to ground capable of sinking up to 500 mA from a positive source. Almost any transmitter has a keying line (PTT), so if a contact closure to ground normally keys the transmitter, you're in business. If a logic high keys your transmitter, the controller also allows PTT high true operation, so that a pullup resistor on the output can define a logic one level to the keying logic. High or low true operation is selected by a DIP switch option. For a high true PTT, set DIP switch 2 ON; for low true PTT, set it OFF.

If your transmitter has *negative* voltage on the keying line, it's necessary to buffer PTT with a relay or transistor circuitry. The PTT transistor switch is capable of keying positive voltages only and can be damaged if connected to a negative voltage.

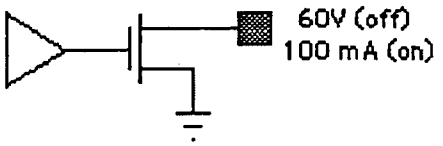

Figure 2-4. PTT Output (REPEATER Connector, Pin 4, orange)

Receiver Audio

Audio from the receiver needs to be supplied to the controller. The receiver audio is mixed with other audio sources before being sent along to the transmitter.

The receiver audio input circuitry to the RC-96 controller allows for a variety of signal levels and impedances. The audio input is capacitively coupled, which means that a DC level may be present on the signal supplied. The receive level is adjustable at R102 (rear panel "RX"; see Setting Audio Levels, below) so that

a fairly wide range of input levels is acceptable, but for best results the input audio should be greater than approximately 0.5 volts peak-to-peak but less than 5 volts. If the level available is less than approximately 0.5 volts peak-to-peak but greater than 80 mV, add jumper JP1 (found below R107) to increase the input sensitivity (to 100mV).

The input impedance for receiver audio is 100K ohms so that audio can be picked off from anywhere inside the receiver without loading problems. No impedance matching is necessary. Find a point past the FM detector where the audio is de-emphasized and squelch gated to route to the controller.

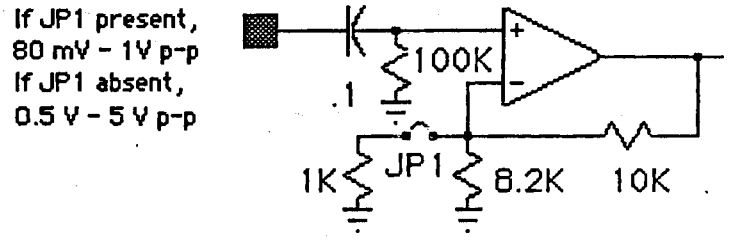

Figure 2-5. Receiver Audio Input
(REPEATER Connector, Pin 7, blue)

Transmitter Audio

Audio is supplied by the controller to the transmitter. Any existing internal audio paths in the repeater should be disabled.

Transmitter audio consists of receiver, speech synthesizer, tone, link, and phone patch audio, switched and mixed under the control of the computer in the RC-96 controller. The audio out of the controller is level-adjustable and has low source impedance so it's easy to find a good place to inject it into the transmitter. If the transmitter audio input is very sensitive, it may be best to reduce the gain of its audio input stage by changing a resistor value in the transmitter.

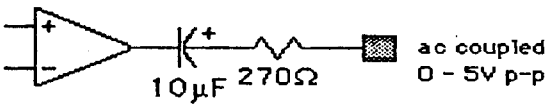

Figure 2-6. Transmitter Audio Output
(REPEATER Connector, Pin 6, green)

Telephone Line

The RC-96 controller can connect directly to the telephone line through the supplied modular cord which plugs into the modular jack. Since all the autopatch, autodial, reverse patch, and phone-line control functions are handled by the controller, connection to the phone line enables all these capabilities. The "EG" (earth ground) terminal of the block should be run through a separate wire directly to the grounding system. This terminal is connected to the third pin of a gas discharge tube across the phone jack, and connection to a good ground will help protect the controller from lightning.

FCC Notice To User

1. UPON REQUEST ONLY, you must provide the following data to your telephone utility company (telco):
(a) Notice of intention to install or permanently remove an FCC Part 68-registered device or system, and the FCC Registration Number*.
(b) The Ringer Equivalence Number(R.E.N.)*. Note that if several devices are connected to the same line, the R.E.N.'s must not add up to more than 5.0. This R.E.N. figure is important to your telco.
(c) The USOC jack type to be provided by the telco – RJ11C.
* See equipment FCC Compliance label.

2. This device may not be used on telco-operated coin phone lines. Party lines and privately owned coin-phones are subject to local State regulatory policies, and possible additional State special requirements.

3. The telco has the right to make changes to their network which can affect the operation of your equipment, provided you are given adequate advance written notice to permit correct operation.

4. In case of operational problems, disconnect your unit by removing the modular plug from the telco's jack. If your regular phone still works properly, your RC-96 controller has a problem and must remain disconnected and (officially) serviced or returned for repairs. If upon the above disconnection your regular phone still has problems, notify your telco that they may have a problem. Request prompt service at no cost to you the user. If a problem is found in premises wiring not telco-installed, you are subject to a service charge. If a fault is in telco-installed wiring, you may be subject to a service call charge.

5. Unless otherwise noted in the Owner's Manual {eg: fuses, etc.}, user may not under any circumstances (in or out of warranty) attempt any service, adjustments or repairs on this unit. It

must be returned to the factory for all such work. The location of the factory is listed in this Owner's Manual.

6. Special FCC rules apply to equipment connected behind a PBX or KTS.

Setting DIP Switch Options

Switch settings on the RC-96 controller select high or low true logic sense for the COS and PTT signals (Figure 2-7). It's now necessary to set the switches correctly to control the repeater properly. Switch 1 selects COS sense and switch 2 selects PTT sense (as explained in previous sections). Assuming you don't have a control receiver connected yet, switch 3 must be set ON so that the RC-96 doesn't think that a control receiver is active, therefore grabbing the Touch-Tone decoder. The other switches can be left off for now. See Chapter 8 and Appendix F for additional details.

	DESCRIPTION	ON	OFF
SW1	REPEATER RCVR COS	HIGH TRUE	LOW TRUE
SW2	REPEATER TX PTT	HIGH TRUE	LOW TRUE
SW3		ON	
SW4-8		OFF	

Figure 2-7. Initial DIP Switch Settings

Setting Audio Levels

Several of the audio levels to the transmitter and phone can be adjusted with a small screwdriver using pots accessible from the rear panel. Although they are preset at the factory, the levels of the speech synthesizer and tone generator can be adjusted with p.c. board mounted pots, accessible with the cover removed. But the speech synthesizer is suggested as the reference level for adjusting the other audio levels to the transmitter.

Remember that the RC-96 controller is an audio source to the transmitter, and its various audio levels should be balanced relative to each other.

First, balance the audio levels from the various sources to the controller, including your receivers, at the controller's output, using the preset speech synthesizer as a reference. An oscilloscope viewing the transmit audio is ideal for monitoring the various levels. You may command the controller to transmit with synthesized speech by entering 3*# on the front panel

keypad. Then, with the controller connected to the transmitter, use the TX pot as a transmit audio level adjustment. Adjust the controller's TX pot and the transmitter's deviation control using a deviation meter. Certain high frequency audio peaks can be allowed to clip in the transmitter's peak limiter.

The audio level from the phone ("PHONE") should be adjusted during a phone patch. The audio drive level into the telephone can be adjusted with the pot labeled "PH DRV" on the rear panel and would typically be set to maximum.

If the patch will be operated full-duplex, the hybrid balance pot (R108 on the board) can be adjusted during a patch for the best null.

This completes the basic installation of the RC-96 Repeater Controller into your system. You're now ready to put it on the air!

Chapter 3

Command Code Structure

Introduction

You speak to your new controller in a simple Touch-Tone command language. Your controller speaks back to you in voice. Commands can be entered from the front panel keypad, over the repeater, phone, or control receiver. The responses are in synthesized speech.

There are several levels of Touch-Tone commands which control the RC-96 controller. Your repeater group probably consists of three types of individuals – the repeater owner or technical group, the Control Operators, and the general users. Therefore, there are three levels of commands in the controller.

User commands are those that would typically be made available to the general users for activating the autopatch, remote base, bulletin board, and other user type functions. The user command level is the lowest level of command classification.

Control Operator commands are those which allow enabling and disabling the various functions of the repeater and selection of various operating modes. For example, the Control Op can select between carrier and CTCSS access, or enable and disable the autopatch or autodialers.

Programming commands change parameters of the repeater such as content of the ID and tail messages, timer values, emergency autodial telephone numbers, and command codes. Programming commands are the most secure type and require that the repeater be placed in a special mode to execute them (unlocked). Typically, details on Programming commands would be reserved for the repeater owner or the repeater's technical group.

Note that all User and Control Op command codes can be changed remotely by the repeater owner with Touch-Tone Programming commands.

User Commands

There are 19 classes of User commands, each with its own independent command code. User command codes consist of a prefix immediately followed by a command root. The prefix can be one to seven digits long and is remotely programmed by the repeater owner using Programming commands, while the command roots contain information related to the action desired. For example, if the User Loadable Autodial prefix is *, dialing autodial location 45 is done by entering the command *45. The * is the prefix, and is remotely changeable, while 45 is the root, which specifies the autodial location being called.

Each User command classification can have an independent command code prefix, and codes can be changed at any time remotely by the repeater owner.

The operation of each of the user commandable functions is described in the next chapter of the manual.

Control Operator Commands

Control Operator commands, which enable and disable various repeater functions, and select operational modes, consist of a command prefix which can be programmed by the repeater owner remotely with Programming commands, followed by a one or two digit root code. The command prefix can consist of between 1 and 7 digits so that Control Op commands can be made as secure as is necessary in your system. Resulting Control Op commands can be between 2 and 9 digits long – easy or secure, it's up to you.

Control Operator selections can be grouped into five "Macro Sets". That is, most of the enable/disable and mode selections can be grouped together and stored in the controller's non-volatile memory using a Programming command. The Control Op Macro Sets make it easy to select a special mode, like night operation, or net mode. One easy to remember Control Op macrocommand can, in effect, perform many command functions.

Macro Set 1 defines how the controller powers up. The repeater owner can specify what features are enabled and disabled and what modes are selected in a stored Macro Set.

The functions of the various Control Op commands are described in Chapter 5.

Programming Commands

Programming commands are the super-secure commands which allow you to remotely change User and Control Op codes, ID and other messages, Morse code characteristics, courtesy tone selection, timer values, and Emergency Autodial numbers. Since Programming commands need to be very secure to prevent tampering, they are accessible only when the controller is "unlocked." Unlocking the controller accesses the Programming commands. When the controller is locked in normal operation, any Programming commands entered are ignored. The controller is unlocked by entering a long Touch-Tone "unlock" command. The actual unlock command is field programmable by the repeater owner among ten billion possible codes and is unique to each controller.

Caution

Do not leave the unlock code in its default (factory preset) form! Refer to Chapter 6 (page 52) on how to change it.

After you've finished a session of programming, you "lock" up the controller so that it's secure from tampering. If you forget to lock it, the controller will lock itself after one minute of no commands.

The classes of Programming commands are found in Chapter 6.

Command Evaluation

The controller evaluates Touch-Tone commands to determine the function requested. Commands can be entered (1) from the front panel keypad, (2) over the repeater receiver, (3) over the phone line, or (4) via the control receiver. When entered over either receiver, the controller examines the sequence of Touch-Tone digits sent during the transmission **after the carrier drops** (after the user unkeys his PTT). When entered from the front panel or phone, the controller examines the sequence **after receiving the enter key (#)**. The controller examines the length of the command, as well as the digits present, and checks for a perfect match to valid commands before acting on the command received.

Front Panel Keypad	**(highest)**
Control Receiver	
Telephone	
Repeater Receiver	**(lowest)**

Fig. 3-1 Command Channel Priorities

Special Keys

There are several special keys that affect operation of the command decoder.

Telephone and Front Panel Enter Key

Since the controller doesn't know when you've finished entering your command (since there's no carrier to drop), the controller looks for a special **enter key – the # key**. For example, to enter the command "123" over the phone or from the front panel, it should actually be entered as "123#", where the # indicates the completion of the command sequence. This applies to User, Control Op, and Programming commands entered from the front panel or over the phone.

Over-the-Air Enter Key

On rare occasions, it is desirable to force a command evaluation when a command is entered over the air. For example, if a weak carrier is present at the receiver input, the controller won't detect a carrier drop which would normally cause a command evaluation. **Over the air, the D key serves as an optional enter key.** If a weak carrier is present at the receiver input, and the Control Op wants to disable the repeater timer, and the Repeater Timer Disable command is 12303, he can enter "12303D" and the command will be accepted by the controller even though the carrier has not dropped.

Over-the-Air Cancel Key

When sending a command to the controller over the air, if you make a mistake part way through the sequence, a **# key will cancel the digits sent to that point** during the transmission, and the correct command can immediately follow the #. For example, if the desired command is 12303, and you mistakenly enter 122, you can enter a # followed by 12303; i.e., 122#12303 entered over the air is interpreted by the controller as 12303.

Over-the-Air Unmute Touch-Tone Key

The # key sent as the first key of a sequence **unmutes Touch-Tone** for the remainder of the transmission and causes the controller to ignore the sequence. Touch-Tone unmute is useful for entering telephone credit card numbers and passing tones through the remote base to other repeaters.

Summary

Command terminator for commands from the phone or front panel

D Optional enter key for commands entered over the air

In middle of a sequence over the air cancels preceding keys

As first key of a sequence over the air unmutes Touch-Tone for remainder of sequence, controller ignores sequence

Command Decoder Timers

Two timers relating to command entry eliminate the effects of rare but unavoidable Touch-Tone decoder falsing on voice. A four second **interdigit timer** cancels a sequence where any digit occurs more than four seconds after the last digit. An eight second **"to end of transmission timer"** cancels any sequence where the last digit was received greater than eight seconds before the end of the transmission.

These timers help the controller discriminate between valid command sequences and the rare occasional false decode on voice.

These timers impose two simple but important requirements on command entry:

1) **Command sequences can not be entered v-e-r-y s-l-o-w-l-y,** because if more than four seconds elapses between digits, the controller will disqualify the command.

2) **Command sequences can not be entered at the beginning of a long transmission,** because if more than eight seconds elapses from the last digit to the end of the transmission, the sequence will be disqualified. A Touch-Tone command followed by the Gettysburg Address will not be accepted.

Chapter 4

How to Command the User's Features

Introduction

This chapter guides you step by step through the procedures for operating the user features of the RC-96 controller. Detailed examples are provided which you can try on your repeater as you read them.

Remember – you can't break your controller with Touch-Tone commands so feel free to play!

All user commands are summarized in Appendix A and on the User Reference Card.

The commands have been broken up into these overall groups:

Touch-Tone Pad Test
Autopatch and Autodial
Reverse Patch
Reading Information
Linking and Paging
Other Activities

Testing Your Touch-Tone Pad

Since your Touch-Tone pad is used for entry of all commands to the controller, it may be a good idea to "check it out." The controller allows you to easily and thoroughly test your pad by letting you enter a sequence of keys, and it reads the sequence back to you in voice.

The first key of the sequence, which tells the controller that you're testing your pad, is "5", and then you can enter any sequence of up to 32 digits for readback. So to test your pad, for example, you can enter, all in one transmission:

5 123456789*0ABCD#

The controller responds by reading back everything after the "5" (* as Sierra, # as P from over-the-air). If a key doesn't decode, it won't be read back. To check a key for intermittent operation, you can press it several times:

5 3333

The controller should read back "3" four times if it decoded each time.

Command (Touch-Tone Pad Test Prefix) (sequence of up to 32 keys)

Example Touch-Tone Pad Test Prefix = 5. User sends "5 123456". Controller says, "One two three four five six".

Related Commands

Programming Touch-Tone Pad Test Prefix

Control Op Pad Test Enable/Disable, User Command Enable/Disable

Autopatch and Autodial

Activating the Autopatch

Now that you know that your tones decode properly, you can make a patch. The Autopatch command consists of the Autopatch prefix followed immediately by the phone number, all as one command. Try:

(prefix) 7273330

The controller will say, "Autopatch", pause, then read back the phone number for verification and pause again. During either pause, if you want the controller to dial the number, click your rig's PTT briefly. By clicking your mike at the *first* pause, you prevent phone number readback. Waiting until the second pause lets you verify that the proper number was entered.

You can hear the controller dial the tones, although, for security, the actual tones heard over the air are not the phone number Touch-Tones. Optional phone number readback and Touch-Tone or dial pulse regeneration mean NO WRONG NUMBERS! If your phone line won't accept Touch-Tone, we'll show how to make it pulse dial in Chapter 6 (Miscellaneous Selections). Again, if you don't want the phone number read back, "click" your mike briefly after it says, "Autopatch", or select the Control Op "Phone Number Readback Disable" mode, and it will dial the number immediately.

Command (Autopatch Prefix) (telephone number)

Example Autopatch Prefix = *
User sends "* 7273330".

Controller says, "Autopatch (pause) seven two seven three three three zero (pause)". User clicks his mike at either pause and controller dials the number.

Hints

If you don't want your users to have to "click" their mikes to start dialing, select the Control Operator "Dial without click" mode.

If you don't want the telephone numbers to be read back to users, select the Control Operator "No phone number readback" mode.

To cancel the patch before it dials, enter any Touch-Tone during either pause.

If long distance is disabled by the Control Op, phone numbers beginning with 0 or 1 or longer than 7 digits will be ignored.

Phone numbers less than 4 digits are not accepted by the Auto patch – they must be dialed through either autodialer.

With long distance enabled, phone numbers up to 18 digits are accepted.

When the Autopatch, User Autodial, or Emergency Autodial Timer times out, the "30 seconds left" message is generated. The user can then enter the Patch Timer Extend command.

If the Activity Timer times out, a warning warble is generated – reset the activity timer by sending a brief transmission.

The Activity Timer will time out if a user makes too long a transmission.

Related Commands

Programming

Phone Hangup Message, Patch Dialing Prefix, Autopatch Timer, Patch Activity Timer, Patch Timer Extend Timer, Autopatch Prefix, Patch Utilities Prefix, Patch Hangup Command, Touch-Tone/Dial-pulse signalling

Control Op

Autopatch E/D, Long Distance E/D, Patch Timer E/D, Cover Tone E/D/Always, Dial Needing/Without Click/No Phone Number Readback

User

Patch Cover Tone, Full-Duplex Patch Timer Extend, Patch Hangup, Patch Custom Hangup, Redial

Hanging Up the Patch

The patch is normally hung up with a Touch-Tone sequence, which may be as simple as # or a multidigit sequence. While the patch is up, simply enter the Patch Hangup command to take down the patch. The controller acknowledges with the "Phone Hangup" message. If the patch is not up, the Hangup command is ignored.

Command

(Hangup Command Code)

Example

Hangup Command Code = #. User sends "#".
Controller disconnects the patch and announces the "Phone Hangup" Message.

Related Commands
Programming
Phone Hangup Message, Patch Hangup Command
Control Op
Control Op Onhook
User
Custom Hangup Code

Patch Redial

The phone number dialed is stored in a redial memory and is available for easy redial without the need to enter the entire phone number again. The redial memory is erased fifteen minutes after the attempted patch so that it doesn't remain indefinitely. Redial is useful in the case of a busy signal or other need to call back the same number.

Command

(Patch Utility Prefix) *

Example

Patch Utility Prefix = *
User made a patch within the last 15 minutes, and the line was busy. He can redial by sending "* *".
The controller says, "Repeat dial" and dials the number.

Defining Your Own Hangup Code

In case of malicious patch hangup during a call, you can define your own three digit hangup code prior to making your call again. The Custom Hangup Code permits you to define the hangup code which inhibits the Patch Hangup command from hanging up the patch.

To define a custom hangup code, enter the command within 15 seconds of initiating the patch. The hangup code is returned to the normal code after completing the current patch.

Command

(Patch Utility Prefix) (any 3 keys except # or D, and may not begin with 1)

Example

Patch Utility Prefix = *
User sends "* 3A7" within 15 sec. of starting the patch. Controller responds with, "Patch cancel" and redefines the patch hangup code to 3A7.

Hints

If you forget the custom code you define, the Control Op can hang up the patch with the Phone Onhook Control Op command.
If you start to enter a patch command and unkey and hear the controller say, "Patch cancel", wait 15 seconds to let the accidental Custom Hangup Code clear before retrying.

Avoiding "1" as a leading digit of the Custom Hangup Code lets us allow the repeater owner to define User Loadable Autodialer Command Prefix with *, Extended User Loadable Autodialer Command Prefix with *1, and Patch Utility Prefix with *, without conflict. (Otherwise *121 could be Custom Hangup *or* Extended Autodial.)

Related Commands
Programming Patch Utility Command Prefix
Control Op Control Op Onhook

Selecting the Cover Tone for Semi-private Patch

The controller offers a "cover tone" available during patches which results in muting of the mobile audio through the repeater replaced by the cover tone. The cover tone offers a degree of privacy by allowing only one side of the conversation to be heard on the air (the telephone side). The cover tone can be selected by the Control Operator to be always on, to be user selectable, or to be disabled.

To activate the cover tone if in the user selectable mode, enter the Cover Tone Command before or during a patch. The cover tone selection is cancelled at the end of the patch and can be selected again for the next patch.

Command (Patch Utility Prefix) *2

Example
Patch Utility Prefix = *, and User Selectable.
User enters "* *2" before or during a patch.
Controller responds with "C", and the cover tone is activated for the next/current patch.

Related Commands
Programming Cover Tone Pitch, Morse Code Speed, Patch Utility Command Prefix
Control Op Cover Tone E/D/Always On
User Patch Hangup (cancels cover when "Cover Tone Enable" mode)

Selecting Full Duplex

Telephone audio during a patch is normally muted at the repeater transmitter while the user is transmitting (half-duplex). This allows the user to immediately block inappropriate remarks made by the party on the phone by simply keying his microphone.

In the full-duplex mode, phone audio is not muted while the user transmits. This allows users with a full-duplex transceiver or a pair of ordinary transceivers to make patches that allow them to talk and listen at the same time.

In the full-duplex mode, inappropriate remarks made by the party on the phone can be blocked only by terminating the patch.

The Control Operator can select full-duplex mode as "user selectable" or "always on."

In the *user selectable mode*, the patch operates half-duplex unless the user specifies full-duplex by entering the duplex command before or during a patch. The full-duplex selection is cancelled at the end of the patch and can be selected again for the next patch.

If full-duplex is Control Op selected as *always on*, then all patches proceed in full-duplex. The user can specify half-duplex for a particular call by entering the duplex command. He can also enter the cover tone command to activate the cover tone and operate the patch half-duplex.

The activity timer is disabled during full-duplex patches.

Command

(Patch Utility Prefix)*1

Examples

Patch Utility prefix = *, Full-Duplex User Selectable.
User enters "**1" before or during a patch.
Controller says, "D" and prepares for full-duplex patch.

Patch Utility prefix = *, Full-Duplex Always On.
User wants this patch only to be half-duplex.
User enters "**1" before or during the patch.
Controller says, "D" and prepares for half-duplex patch.

Related Commands

Control Op

Full-duplex User Selectable/Always On

Extending the Patch Timer

When the user is notified by the controller that he has "30 seconds left", he can extend the patch timer with the Timer Extend command. Entering the Timer Extend command reloads the patch timer with the value defined by the repeater owner, allowing indefinite extension of the patch.

Command

(Patch Utility Prefix) *3

Example

Patch Utility Prefix = *
User sends "* *3" during patch after the controller informed him that "30 seconds left", i.e., that the timer has almost expired.
Controller says, "Timer X" and reloads patch timer with the Patch Timer Extend value.

Hints

The controller waits until the mobile is listening before saying, "30 seconds left" to be sure he has an opportunity to hear the message.

Since the controller waits until the mobile is listening before the warning, the actual patch duration may end up being somewhat longer than the programmed patch timer *plus* 30 seconds.

The timer can be extended over and over, but no warning is given before it times out again.

Related Commands

Programming Control Op

Patch Timer Extend Timer, Patch Utility Command Prefix
Patch Timer E/D

Loading and Erasing the User Loadable Autodialer

The Autopatch is convenient and reliable, but punching in all the numbers can be tricky while you're zooming down the freeway. The autodialers allow quick, easy access to frequently called numbers with just a few keys, instead of the eight or more needed with the Autopatch. And the autodial numbers can be loaded and changed remotely, so it's easy to keep up with new users and users that move or want to add or delete numbers.

There are two banks of User Loadable Autodialer numbers – the first bank (Bank 0) holds locations 10-99, and the second bank (Bank 1) contains 100-199, although addresses in the second bank are specified by their last two digits only. (Each bank has its own load/erase command code prefix.)

The phone number can be secured from readback when activating the autodialer for security. The security option is selected when loading the number into memory.

Before autodial locations can be loaded or changed, the autodialer must be unlocked with a Control Operator command. As a precaution against accidentally writing over existing numbers, the location must be empty before a number is written. First ERASE a location, then LOAD a number into it. To erase a number, enter the load/erase prefix followed by the location. To erase location 10, which is in the first bank of numbers, the command is:

(prefix) 10

The controller responds with, "Autodial Cancel", and the location is erased.

To load location 10 (in Bank 0) with the phone number 727-3414, the command is:

(prefix) 10 7273414

The controller responds to the command with, "Autodial write." From now on, you can call location 10 with the User Loadable Autodial activate command.

Erase Command

(User Loadable Autodial Load/Erase Prefix) (Location)

Example

Autodial Bank 0 Load/Erase Prefix = 456
User sends "456 40".
Controller says, "Autodial Cancel" and erases location 40.

Load Command

(User Autodial L/E Prefix) (Location) (Phone Number)
or (User Autodial L/E Prefix) * (Location) (Phone Number)
[phone number secured from readback]

Example

Autodial Bank 0 Load/Erase Prefix = 456
User sends "456 40 7273414".
Controller says, "Autodial Write" and loads location 40 with the phone number 727-3414. Activating User Loadable Autodialer allows phone number readback.

Example

Autodial Bank 1 Load/Erase Prefix = 457
User sends "457 * 20 7273330".
Controller says, "Autodial Write" and loads location 120 with the phone number 727-3330. Activating User Loadable Autodialer does not allow phone number readback.

Hints

If you don't want users to be able to erase and change autodial numbers, either keep the autodialer locked with the Control Op command, or keep the L/E command code prefix secret.

If an autodial location is secured from readback, the Control Op can bypass security option with User Autodialer Unhide mode.

Write down what numbers are stored where, so you won't lose track of what's in the controller.

Autodial Load/Erase commands use the two low-order digits of the location only.

Don't assign the same prefix for Autodial Banks 0 and 1 because this will make Bank 1 inaccessible.

Related Commands

Programming

User Loadable Autodial L/E Command Code Prefix, Extended
User Loadable Autodial L/E Command Code Prefix

Control Op

User Autodial Unlock/Lock, User Autodial Hide/Unhide

User

User Loadable Autodialer Activate

Activating the User Loadable Autodialer

Phone numbers stored in the User Loadable Autodialer can be dialed by entering the User Loadable Autodial command prefix followed by the autodial location (2 digits). To call location 10 (which is in Bank 0), enter:

(User Loadable Autodial Prefix) 10

The controller responds with, "Autodial one-zero", pause, the phone number "7273414", and pause. As with the Autopatch, briefly keying the mike at either pause commands the controller to dial the number into the phone. If the Control Op "Dial Without Click" mode is selected, the number will be dialed after the second pause without needing to key the mike. If the Control Op "No Readback" mode is selected, the controller will say, "Autodial" and dial the number without a "click." In this mode, the autodial location and phone number are not read back.

You can inhibit the phone number readback by clicking the mike at the first pause. Waiting until the second pause allows you to verify the contents of the autodial memory. You can also prevent phone number readback of an autodial slot by having selected the "security" option when loading the number into the User Loadable Autodialer. The Control Operator can bypass the security mode to allow verification of the numbers stored, if necessary, with the Unhide command.

If you've made a mistake entering the autodial command, you can cancel the request by entering any Touch-Tone during either pause, or by not clicking the mike if required.

Activate Command

(User Loadable Autodial Prefix) (Location) [Bank 0]
(Extended User Loadable Autodial Prefix)(Location) [Bank 1]

Example

User Loadable Autodial Prefix = *. User sends "* 40". Controller says, "Autodial 40 (pause) seven two seven three four one four", user clicks his mike at either pause and controller dials the number.

Hints

If you don't want your users to have to "click" their mikes to start dialing, select the Control Operator Dial Without Click mode or the Phone Number Readback Disable mode.
The Long Distance E/D Control Operator selection does not apply to the User Loadable Autodialer.
One and three digit numbers can only be dialed from the User Loadable or Emergency Autodialers.
The User Loadable Autodialer and Extended User Loadable Autodialer prefixes are totally independent. For example, they could be * and 9, or * and *1, or 94 and 95, etc.

Related Commands Programming: User Loadable Autodialer Timer, Patch Activity Timer, Patch Timer Extend Timer, User Loadable Autodialer Command Prefix, Extended User Loadable Autodialer Command Prefix, Touch-Tone/Dial-pulse signalling

Control Op: User Loadable Autodial E/D, Patch Timer E/D, Cover Tone E/D/ Always, Dial Needing/Without Click/No Phone Number Read-back, User Loadable Autodial Hide/Unhide

User: Patch Cover Tone, Full-Duplex, Patch Timer Extend, Patch Hangup, Patch Custom Hangup, Patch Redial

Activating the Emergency Autodialer

One hundred and ninety of the autodial numbers (locations 10-199) are accessed with their prefix (Bank 0 or Bank 1) plus their **two digit** location number. But locations 0-9 are accessed with the Emergency Autodial Prefix followed by the **one-digit** location number. These autodial locations function somewhat differently in that the responses by the controller are not the locations and phone numbers, but are programmable messages, like "Operator", "Fire", "Police", etc. These ten numbers are intended for emergency public service agencies, and the response indicates selection of the correct agency. The Emergency Autodialer does not require that the user click his mike to initiate telephone dialing. The patch is terminated just like the Autopatch and User Loadable Autodialer.

Command: (Emergency Autodial Prefix) (Location)

Example:
Emergency Autodial Prefix = *.
Emergency Autodial Location 1 Message= "Fire".
User sends "* 1".
Controller says "Fire", then dials the phone number stored in Emergency Autodial location 1. The user does not need to click his mike to emergency autodial.

Hints:
It isn't necessary to click your mike to initiate dialing.
One and three digit numbers can only be dialed from the User Loadable or Emergency Autodialers. They cannot be dialed directly over the air.

Related Commands Programming: Autodial Service Messages, Emergency Autodial Timer, Patch Activity Timer, Patch Timer Extend Timer, Emergency Autodial Command Prefix, Emergency Autodial Numbers, Touch-Tone / Dial-pulse signalling

Control Op: Emergency Autodialer E/D, Patch Timer E/D, Cover Tone E/D/ Always

User: Patch Cover Tone, Full-Duplex, Patch Timer Extend, Patch Hangup, Patch Custom Hangup, Patch Redial

Reverse Patch

Bringing Up the Reverse Patch from the Phone

The reverse patch can be activated by calling the controller on the phone. Four Control Op selectable modes are available.

Mode 0 operates as follows. The caller dials the repeater's phone number and the controller auto-answers (when the "Phone Answer Delay Timer" times out) with a programmable message such as "WA6AXX Repeater, control." So far, the transmitter has not been affected, and users over the air are not aware of the call, except that they no longer have access to the Touch-Tone decoder (it's listening on the phone instead). The caller can then enter the reverse patch command followed by #, and the transmitter will activate with a "ring" signal to alert users that a call is waiting. The Touch-Tone decoder switches back to the receiver to await a user answering the reverse patch.

Mode 1 answers as in Mode 0, but automatically starts to ring out after 5 seconds if the user "Telephone Timer Extend", Control Op command, or the unlock code have not been received. This mode allows callers **without Touch-Tone** phones to use the reverse patch while still allowing commands to be entered over the telephone.

Mode 2 causes the controller to ring out when the "Phone Answer Delay Timer" time outs, but the line is not answered until a repeater user enters the Reverse Patch Answer command over the air.

Mode 3 is similar to Mode 0 except that it is optimized for talkback paging applications. Upon answering the phone, the controller expects a three digit paging code. The paging sequence is activated over the repeater transmitter, and the caller is placed on the air for the duration of the Talkout Timer. The call can be answered from the repeater and will then proceed as a reverse patch. If the caller enters # as the first key, the controller is returned to Mode 0 for the remainder of the call.

The following command is relevent only in Modes 0 and 3.

Command

(Reverse Patch Command)

Example

Reverse Patch Command = 1
Caller on the phone enters 1# (# required as "enter key" on the phone). Controller activates transmitter and "rings" for the duration of the Reverse Patch Ringout Timer or until answered with Reverse Patch Answer command.

Hints

After the Reverse Patch Command is entered, the Touch-Tone decoder switches to the repeater receiver, so that the

caller cannot enter additional Touch-Tone commands.
If you don't want to answer the reverse patch, the Patch Hangup command from over the air will terminate the ringout early.

Related Commands
Programming: Phone Answer Message, Phone Answer Delay Timer, Autopatch Timer, Patch Activity Timer, Patch Timer Extend Timer, Reverse Patch Command Code (Patch Utilities Command Prefix), Patch Hangup Command, Ringout Timer
Control Op: Reverse Patch Enable/Disable, Patch Timer Enable/Disable, Cover Tone Disable/Enable/Always On, Reverse Patch Mode
User: Hangup, Custom Hangup, Cover Tone, Full-Duplex, Patch Timer Extend

Answering the Reverse Patch Over the Air

Repeater users over the air can answer a reverse patch call by entering the Reverse Patch Answer Command (which is simply the Patch Utility Command Prefix). After entering the command, the user must unkey in order to let the controller evaluate the command and connect the caller to the repeater.

Command: (Patch Utility Prefix)

Example:
Patch Utility Prefix = *
User sends "*" while reverse patch is ringing.
Controller connects caller to the radio.

Hints:
After entering the command, unkey and listen for Morse code "I" (beep-beep) to be sure the patch is connected.
When answering the reverse patch, identify yourself to the caller so that he will not be confused.

Related Commands
Programming: Patch Utility Command Prefix, Autopatch Timer, Patch Activity Timer, Patch Timer Extend Timer
Control Op: Reverse Patch E/D, Patch Timer E/D
User: Hangup, Custom Hangup, Cover Tone, Full-Duplex, Patch Timer Extend

Extending the Telephone Timer

When calling the repeater on the phone, the user can extend the telephone timer (from its preset 15 second limit) to two minutes. The command is effective only from the telephone (nothing happens if entered over the air). This capability is useful when calling to record or play back mail from the Digital Voice Recorder or loading or changing autodial numbers.

Command: (Telephone Timer Extend Command)

Example

Telephone Timer Extend Command = 0
User calls the repeater on the phone to load voice mail into the Digital Voice Recorder. Controller answers the phone. User enters "0#" to extend the controller's timer. Controller says, "Two minutes." User can then activate the DVR mailbox. This command can be entered more than once if needed.

Reading Information

Reading Back Your Signal Strength

Assuming that an S-meter signal voltage is connected to the RC-96 controller, users can interrogate their signal strength into the repeater. The controller always measures the S-meter one-half second into each new transmission and stores the reading. If the user happens to request his signal strength, the stored reading is spoken in synthesized speech. The meter is calibrated in S-units and dB from S0 to S9 plus 60.

Command

(S-Meter Command)

Example

S-Meter Command = 8
User's signal strength into the repeater is S9+20
User keys down at least one half second and sends "8".
Controller says, "S9 plus twenty".

Hint

Be sure to key down at least 1/2 second when entering the command.

Related Command Programming

S-Meter Command Code, User Command Enable/Disable

Commanding the Demo Messages and Bulletin Board

Users can call up several messages which can be programmed by the repeater owner to include information of interest to the users. They can also activate the various ID messages contained in the controller.

The response to the Bulletin Board 1 command would be the message stored in Bulletin Board 1, such as "Club meeting tomorrow at 8. See you at the meeting."

Command

(Demo Prefix) (0-8, *)

0 = Initial ID Message
1 = Forced CW ID Message
2 = Anxious ID Message
3 = Pending ID Message 1
4 = Pending ID Message 2
5 = Pending ID Message 3
6 = Special ID Message
7 = Bulletin Board Message 1
8 = Bulletin Board Message 2
* = Firmware Revision Announcement

Example

Demo Prefix = 3
User sends "3 *".
Controller says, "This is the Advanced Computer Controls RC-96 Repeater Controller, VX.X."

Related Commands
Programming
Control Op

Demo Command Code Prefix
User Command E/D

Linking and Paging

Bringing Up the Link / Remote Base (Crystal and BCD Controlled Radios)

You can activate a link or remote base transceiver connected to the controller, allowing you to tie your repeater to other frequencies. The link can be activated in the listen only mode (repeater users monitor the link receiver but don't activate its transmitter), receive/transmit mode (users monitor its receiver and activate its transmitter when they talk into the repeater), and can be turned off.

In addition, users can change the frequency of the remote base transceiver with Touch-Tone commands so that they can link the repeater to any frequency.

The Link On Receive Only command brings up the link or remote in listen only mode. Signals received over the link transceiver bring up the repeater transmitter and are retransmitted over the repeater. Users can talk on the repeater, however, without interfering with the stations on the link frequency. Repeater users' audio overrides link audio to allow a conversation to take place in this mode.

The user can activate the link transmitter. Now repeater users are retransmitted over the link frequency and appear to listeners on the link frequency as any other user on that frequency. The link can be to other repeaters or to simplex frequencies.

Users can change the frequency of the transceiver by entering the desired frequency in a format similar to that of keyboard entry HT's, including provisions for selecting the transmit offset.

The Link Off command turns off receive and transmit capabilities of the link or remote base.

Commands

(Link Prefix) 1 — Link On Receive Only
(Link Prefix) 2 — Link On Receive/Transmit
(Link Prefix) 3 — Link Off
(Link Prefix) (mhtof) — Link Frequency (Mhz, hundreds kHz, tens kHz, ones kHz, xmit offset 1/minus, 2/simplex, 3/plus)

or

(Link Prefix)(m*htof)

Examples

Link Prefix = 7
User sends "7 1". Controller responds with current frequency and goes to receive only mode.
User sends "7 69401". Controller responds with, "Six point nine four, minus" and programs remote base transceiver to 6.940 with minus transmit offset.
User sends "7 2". Controller responds with, "Transmit" and goes to transmit mode.
User sends "7 3". Controller responds with, "Off" and turns remote base off.

Related Commands
Programming
Control Op

Link / Remote Base Command Code Prefix
Link E/D, User Command E/D

Bringing Up the Link / Remote Base (FC-900 Interface)

Users can select the desired band segment for Link 1 and Link 2. The band segment definition includes optional transmit offsets and legal frequency ranges. Selecting a band also turns the link on in receive-only mode. If a frequency out of the legal range is selected, the controller responds with "Frequency out of range" as a warning, but the dialed frequency *is* selected.

Commands

(Link Prefix) 1 x — Link 1 Band Select
(Link Prefix) 4 x — Link 2 Band Select

X	"Band"	Rx F Range	Tx Offsets	Tx F Range*	UX
0	1240	1240.000 - 1249.995 MHz	S, 12 MHz	1240.000 - 1261.995 MHz	129A
1	10 m	29.000 - 29.695 MHz	S, 100 kHz	29.000 - 29.695 MHz	19A
2	2 m	144.000 - 147.995 MHz	S, 600 kHz	144.000 - 147.995 MHz	29A/H
3	220	220.000 - 224.995 MHz	S, 1.6 MHz	220.000 - 224.995 MHz	39A
4	440	440.000 - 449.995 MHz	S, 5 MHz	438.000 - 449.995 MHz	49A
5	430**	430.000 -439.995 MHz	S, 5 MHz	425.000 - 444.995 MHz	49A
6	6 m	50.000 - 53.995 MHz	S, 1 MHz	50.000 - 53.995 MHz	59A
7	420**	420.000 - 429.995 MHz	S, 5 MHz	420.000 - 434.995 MHz	49A
8	1280	1280.000 - 1289.995 MHz	S, 12 MHz	1268.000 - 1299.995 MHz	129A
9	1290	1290.000 - 1299.995 MHz	S, 20 MHz	1270.000 - 1299.995 MHz	129A
A	1270	1270.000 - 1279.995 MHz	S, 20 MHz	1250.000 - 1299.995 MHz	129A
B	1270	1270.000 - 1279.995 MHz	S, 12 MHz	1258.000 - 1291.995 MHz	129A
C	1250	1250.000 - 1259.995 MHz	S, 12 MHz	1240.000 - 1271.995 MHz	129A

* Transmit frequency range contains gaps - range indicated is intended to show limits. Add and subtract transmit offset to receive frequency ranges to determine transmit segments. Limited by amateur band edges.

Warning

** Neither ACC nor ICOM guarantees operation of band unit in these frequency ranges. Band units may require retuning. Success and performance may vary from band unit to band unit.

Link 1 and 2 can be controlled independently. Transmit is permitted only from Link 1. Receive audio from Link 2 will be lower in level than Link 1 and will mix.

Commands

(Link Prefix) 1 – Link 1 On Receive Only
(Link Prefix) 2 – Link 1 Receive/Transmit
(Link Prefix) 3 – Link 1 Off
(Link Prefix) 4 – Link 2 On Receive Only
(Link Prefix) 6 – Link 2 Off

The frequency of Link 1 and Link 2 are selected with the following commands. "MHTOF" represents MHz, hundreds kHz, tens kHz, ones kHz, and offset (1/minus, 2/simplex, 3/plus) digits. The * (decimal point) and link specifier (1) are optional for Link 1.

Commands

(Link Prefix) (mhtof)	Link 1 Frequency
(Link Prefix) (m*htof)	Link 1 Frequency
(Link Prefix) 1 (m*htof)	Link 1 Frequency
(Link Prefix) 4 (m*htof)	Link 2 Frequency

The band segments assigned to Link 1 and 2 can be swapped. This permits quick access to transmit, which is permitted only from Link 1.

Command

(Link Prefix) *	Swap Link 1 / Link 2 Bands

The band units include provisions for high/low power selection.

Band Unit	Power Level
10M, 6M, 1200 MHz	10 or 1 Watt
2M, 220, 440 MHz	25 or 5 Watts
2M (UX-29H)	45 or 5 Watts

Commands are available for selecting high or low power remotely for Link 1.

Caution

Remember that the band units are intended for intermittent duty cycle. External cooling may be desirable. Keep this in mind when selecting high power.

Commands

(Link Prefix) 1 *	Link 1 Power Interrogate
(Link Prefix) 1 * 1	Link 1 High Power
(Link Prefix) 1 * 0	Link 1 Low Power

A remotely selectable 37 tone CTCSS encoder is available as an option for the FC-900 interface. The encoder allows accessing repeaters which are set up for CTCSS access or control. The encoder option plugs into the IC socket at U7 of the FC-900.

Command (Link Prefix) 7 xx CTCSS Select (00=off, 01-38=on)

See page 62 for the CTCSS frequency table.

Note The CTCSS encode *level* is adjusted using pot CTCSS LEVEL R101 on the FC-900 board. See page 62 for the CTCSS frequency table.

Unmuting Touch-Tone

At times it is desirable to pass Touch-Tone sequences through the repeater unmuted, without them being decoded by the RC-96 controller. For example, bringing up an autopatch on a repeater accessed through the remote base would require passing tones through the controller to the linked repeater.

Command # (sequence)

Example Pass MCI code and long distance phone number through to the phone line after an autopatch to the local MCI number.
User sends "# 54321 408 555 1234" all during one transmission.
Controller unmutes after the # and allows the MCI code and phone number to pass unmuted, while ignoring the sequence.

Hints Be sure to send the # at the beginning of *each transmission* that you want unmuted.
If you would like *all* Touch-Tones to be unmuted and would like the controller to decode the commands, use the Control Op selectable "Touch-Tone Unmute" mode.

Activating Pocket Pagers and Selective Call Decoders

The controller can generate various paging tones in response to Touch-Tone commands entered from over the air or phone. These tones can activate pocket pagers and selective call decoders installed in mobile and handheld transceivers.

A pager can be activated by entering the paging prefix followed by the three-digit pager ID code. Up to 1000 pagers can be defined in the controller's programmable memory (see Chapter 6, "Pager Memories"). In Reverse Patch Mode 3, the caller can simply enter the three-digit pager ID code over the phone without the paging prefix or terminator.

Command (Memory Paging Prefix)(3 digit pager code)

Example Memory Paging prefix = 2
User sends 2165 over the air.
Controller sends paging sequence to the pager type and address stored in pager memory 165.

Command (3 digit pager code)

Example

Reverse Patch Mode 3
User calls on the phone and enters 165.
Controller sends paging sequence to the pager type and address stored in memory 165. The controller acknowledges with, "Wait for ready..." and waits for a break in a conversation over the air before sending the tones stored in pager memory 165. After sending the tones, the controller prompts the caller with "Ready." The caller can talk out over the air for a programmable period, and a user over the air can enter the Reverse Patch Answer command to make the conversation two way.

Related Commands
Programming Memory Paging Command Code Prefix, Pager Memories
Control Op User Command E/D

Two-Tone Paging

For backward compatibility to the RC-85 controller, and for additional flexibility in two-tone paging, an additional paging command is available which allows the user to directly specify the tones to be generated. One second / three second two-tone and eight second group call tones can be generated.

The paging command consists of the paging prefix followed by the group number and tone number of each of the two sequential tones.

See page 61 for frequency tables.

Commands

(Two-Tone Paging Prefix)(A Group #)(A Tone #)(B Group #) (B Tone #)

(Two-Tone Paging Prefix)(Group #)(Tone #) [group call]

Examples

Two-Tone Paging Prefix = 2
User sends "22315".
Controller sends two tone sequential tones, A tone Group #2 Tone #3 (669.9 Hz), B tone Group #1 Tone #5 (433.7 Hz).
User sends "236".
Controller sends eight second group call Group #3 Tone #6 (979.9 Hz).

Hints

When sent from the phone, the controller acknowledges with, "PAGE" and waits for a break in a conversation over the air before sending the tones.

Related Commands
Programming
Control Op

Two-Tone Paging Command Code Prefix
User Command E/D

Other Activities

Taking the Touch-Tone Access Mode Up and Down

When the Touch-Tone Access Mode is enabled by the Control Op, users can bring the repeater up and down with the Touch-Tone Access command. Touch-Tone Access is intended as an alternative to the need for CTCSS.

Command

(Touch-Tone Access Mode Prefix) 0 [down]
(Touch-Tone Access Mode Prefix) 1 [up]

Examples

Touch-Tone Access Mode Prefix = 741
User sends "7410".
Repeater sends the Forced CW ID and "goes to sleep" - i.e., TT Access down. Repeater is effectively off.
User sends "7411".
Repeater "wakes up" and says "Up."

Hints

The controller sends the Forced CW ID Message when going down, if necessary, to properly ID at the end of an exchange of transmissions.
When taken up, the Touch-Tone Access Mode Timer will take the repeater back down after a period of inactivity.
If in the Control Op selected PL Access Mode, Touch-Tone Access Up allows carrier access to the repeater. Touch-Tone Access Down restores the need for CTCSS to access the repeater.
When controller is in CTCSS with Touch-Tone Access Enabled, Touch-Tone Access Up allows carrier access to the repeater and user-level commands.

Related Commands
Programming

Touch-Tone Access Mode Timer, Touch-Tone Access Mode Command Code prefix

Control Op

Touch-Tone Access Mode E/D, CTCSS Access

Activating the Spare Audio Function

Users can bring up an auxiliary audio source, such as a scanner, weather radio, etc. Entering the Spare Audio command causes the Link RX Audio input to connect to the transmitter audio mixer and holds up the repeater transmitter PTT. The Spare Audio source can be shut off with #. A programmable timer is available to automatically shut down the Spare Audio function if a user forgets to turn it off.

The Link COS input needs to be taken high to enable the audio path.

Command (Spare Audio Command)

Example
Spare Audio Command = 666
User sends "666".
Controller holds up transmitter and connects Spare/Link audio input to transmitter (turns off with #).

Hint
Avoid a single digit access command, because occasional Touch-Tone falsing could bring up the Spare Audio function.

Related Commands
Programming Spare Audio Command Code, Spare Audio Timer
Control Op User Command E/D
User # Knockdown

Commanding the Remote Control Output Functions

Users can activate or interrogate up to eight remote control logic outputs (User Functions) from the controller. These outputs can be wired to various equipment in the repeater system for controlling high/low power, antenna selection, remote base band select, etc. In response to the command entry, the controller provides a high or low beep tone to indicate the current state of the output.

Certain of the UF outputs take on dedicated functions when various options are selected. For example, UF 3 becomes a Phone Line Busy output when in the Phone Line Shared mode. UF commands to dedicated outputs are ignored by the controller.

Commands
(UF Prefix) (Output #1-8) (1 = on (low), 0 = off (high))
(UF Prefix) (Output #1-8) [interrogate]

Examples
UF Prefix = 9
User sends "9 3 0".
Controller sends low tone and output #3 turns off.
User sends "9 2 1".
Controller sends high tone and output #2 turns on.
User sends "9 3".
Controller sends low tone confirming off state.

Hint
See Chapter 8 for details of remote control logic output function.
Commands to UF 3 are ignored when the Phone Line Shared mode is selected.
The UF output logic sense can be inverted with the UF Logic Sense Programming command – i.e., high beep / "1" = output on (low) or off (high).

Related Commands
Programming User Function Logic Output Command Prefix, UF Logic Sense
Control Op User Command E/D

Chapter 5

How to Be a Control Operator

Introduction

This chapter describes the Touch-Tone commands available to the repeater's Control Operators. These commands are defined here, and summarized in Appendix B and on the Control Operator Reference Card.

Control Operator Commands

The Control Op commands permit enabling and disabling the various functions and selection of operating modes. Control Op commands consist of a prefix (programmed by the repeater owner) followed by a one or two digit root code (defined below). The prefix can be one to seven digits long, so Control Op commands can total two to nine digits. The entire command is entered as one sequence, i.e., prefix-root as one transmission over the air, or prefix-root-# from a phone or the front panel.

The controller responds to each Control Op command with a unique response message so that the Control Op knows for sure that he entered the correct command. The format used for command description is as follows:

root code response message **command name**(†) command description

The † that follows many of the command names indicates that the command selection is part of the information stored in the Control Op Macro Sets.

Macro Set Selection Commands

Five commands allow "macro" selection of Control Op Command Macro Set 1, 2, 3, 4 or 5. Each macro set stores the entire array of Control Op selections designated below with the †.

They also store three groups of User Command selections: the current up or down state of the Touch-Tone Access Mode; the user selected state of the link/remote base; and the states of the eight User Function remote control logic outputs.

The macro sets are stored by the repeater owner using the Store Macro Set programming commands.

1	M1	**Macro Set 1 Select**	Selects Control Op Macro Set #1.
2	M2	**Macro Set 2 Select**	Selects Control Op Macro Set #2.
3	M3	**Macro Set 3 Select**	Selects Control Op Macro Set #3.
4	M4	**Macro Set 4 Select**	Selects Control Op Macro Set #4.
5	M5	**Macro Set 5 Select**	Selects Control Op Macro Set #5.

Example

Control Op Prefix = 123.
Enter "123 2" to select Macro Set 2.

Hints

The controller powers up and resets to Macro Set #1.
Macro sets simplify the work of the Control Op by requiring only a single command to carry out many routine Control Op chores.

Repeater Enable / Disable Commands

A pair of commands allow the Control Op to enable or disable the repeater's transmitter. (The Repeater Enable command also enables the Site Alarm.)

00	RE	**Repeater Enable†**	Enables repeater transmitter.
01	RD	**Repeater Disable†**	Disables repeater transmitter.

Example

Control Op Prefix = 123
Enter 123 01 to disable the repeater.

Hints

These commands are the repeater's "Big Switch".
While disabled, user commands are not recognized, but Control Op and Programming commands are.

Repeater Timer Commands

Five commands affect the repeater's timeout timer, or "alligator". The Control Op can enable or disable the timeout timer and select one of two different timeout periods previously defined by the repeater owner with Programming commands. Finally, the Control Op can clear the timer, either in anticipation of a station timing out the repeater, or after the repeater has been timed out. The timeout timer automatically clears after the signal timing it out goes away.

02	**TE**	**Repeater Timer Enable†**	Enables repeater timeout timer.
03	**TD**	**Repeater Timer Disable†**	Disables repeater timeout timer.
04	**TL**	**Repeater Timer Long†**	Selects long timeout timer.
05	**TS**	**Repeater Timer Short†**	Selects short timeout timer.
06	**TC**	**Clear Repeater Timer**	Cancels existing timeout condition, clears timeout timer.

Hint

If a carrier times out the repeater and remains present, the Control Op can clear the repeater timer if he can capture the other signal, but he must terminate the command with the "D" key to force a command evaluation over the air.

Access / Control and Tone Panel Commands

The Control Op can select from four different carrier/CTCSS operation modes and a Touch-Tone access mode. CTCSS operation relies on an active high logic signal from an external CTCSS decoder indicating to the controller that subaudible tone is present on a signal at the receiver *or* the optional internal Tone Panel board.

The "Carrier Access/Control" mode allows full access and control without the need for CTCSS.

The "CTCSS Control Op Command" mode allows carrier access to the repeater, and carrier access to User commands, but requires CTCSS for activation of Control Op (and Programming) commands.

The "CTCSS Control Op/User Command" mode requires CTCSS for activation of User, Control Op, or Programming commands, but allows carrier access to the repeater.

Finally, "CTCSS Access" requires CTCSS for any level of control and for access to the repeater.

Touch-Tone access is brought up or down by the Touch-Tone Access User commands, and the Touch-Tone Access timer can automatically take the repeater down after a period of inactivity. When the mode is disabled by the Control Op, the Touch-Tone Access User commands have no effect.

07	CA	**Carrier Access/Control†**	Enables carrier access and control.
08	PC	**CTCSS Control Op Command†**	Enables carrier access (CTCSS required for Control Op and Programming commands).
09	PU	**CTCSS Control Op/User Cmd†**	Enables carrier access, CTCSS required for Programming, Control Op and User commands.
10	PL	**CTCSS Access†**	CTCSS required for access and control.
52	ME	**TT Access Mode Enable†**	Enables Touch-Tone Access Mode.
53	MD	**TT Access Mode Disable†**	Disables Touch-Tone Access Mode.
81...88	1E...8E	**Tone Panel Tone Enable†**	Enables tones 1 through 8 on the optional Tone Panel.
91...98	1D...8D	**Tone Panel Tone Disable†**	Disables tones 1 through 8 on the optional Tone Panel.

Hints

CA, PC, PU and PL are mutually exclusive.
ME and MD are mutually exclusive, but Touch-Tone Access can be enabled (ME) along with CA/PC/PU/PL condition.
When in CTCSS Access, Touch-Tone Access overrides the need for CTCSS for access, and is an alternative to the need for CTCSS.

User Command Enable / Disable Commands

The Control Op can enable or disable the User Command level. The disable command disables all User Commands *except the Emergency Autodialer*, which can be left enabled while all other User Commands are disabled. The Pad Test Disable command allows just the Touch-Tone pad test to be turned off.

11	CE	**User Command Enable†**	Enables User Touch-Tone commands.
12	CD	**User Command Disable†**	Disables User Touch-Tone commands.

41	TE	**Pad Test Enable†**	Enables Touch-Tone Pad Test.
42	TD	**Pad Test Disable†**	Disables Touch-Tone Pad Test.

Hint

Disable the Emergency Autodialer as well as User Commands to shut off all User level commands.

Link Enable / Disable Commands

The Control Op can enable or disable the link or remote base with these commands. When disabled, the Link User commands have no effect.

13	LE	**Link Enable†**	Enables link / remote base.
14	LD	**Link Disable†**	Disables link / remote base.

Hint

The Link frequency and mode, which are User command functions, are also stored in the Macro Sets so that selecting a Macro Set can enable the link and bring it up on a certain frequency in receive only or receive/transmit.

Autopatch / Autodial Commands

The Control Op can enable or disable independently the Autopatch, User Loadable Autodialer, and Emergency Autodialer. When disabled, the related user command codes are ignored by the controller. Long distance can be enabled or disabled. When disabled, phone numbers with a leading zero or one, or longer than seven digits are not permitted by the Autopatch. The User Loadable Autodialer can be locked, which prevents erasing or loading phone numbers.

The patch timer, which includes the overall timer and the activity timer, can be enabled or disabled. (Separate overall timer values are permitted for the Autopatch and each Autodialer, and for the activity timer.) The patch Cover Tone can be selected for all calls, can be shut off, or can be left user selectable (with the Patch Cover Tone User Command) on a call by call basis.

Full-duplex can be selected for all calls, or can be left user selectable (with the Full-Duplex User Command) on a call by call basis.

The user can be required to click his mike to initiate Autopatch and User Loadable Autodial calls, or the controller can be set to "Dial Without Click". Further, all phone number readback can be disabled as well as not requiring the click to dial with the "No Phone Number Readback" command. User Loadable Autodial phone number readback can be enabled by the Control Op even for phone numbers loaded with the security option – i.e., the numbers can be "unhidden".

The Control Op Offhook command performs one of two functions.

(1) When entered over the air, it activates the patch without regenerating signalling into the phone. The Control Op can then send tones directly into the phone.

(2) Entered over the phone after calling into the repeater, this command places the Control Op on the air. The Control Op keeps the Touch-Tone decoder on the phone and is responsible for hanging up. The patch timers protect against forgetting to enter the Hangup command.

The Control Op Onhook command can be used to hang up after calling the controller on the phone for a command session, or following the Offhook command. The Patch Hangup User Command (followed by a # over the phone) will also place the phone back on hook. The Onhook command can be used over the air to hang up the patch in case a user has defined a custom hangup code and forgotten the code he defined.

19	PE	**Autopatch Enable†**	Enables Autopatch.
20	PD	**Autopatch Disable†**	Disables Autopatch.
27	LE	**Long Distance Enable†**	Enables Autopatch long distance.
28	LD	**Long Distance Disable†**	Disables Autopatch long distance.
21	UE	**User Autodial Enable†**	Enables User Loadable Autodialer.
22	UD	**User Autodial Disable†**	Disables User Loadable Autodialer.
47	AU	**User Autodial Unlock†**	Unlocks User Loadable Autodialer.
48	AL	**User Autodial Lock†**	Locks User Loadable Autodialer.
57	UU	**User Autodial Unhide†**	Allows numbers loaded with security option to be read back.
58	UH	**User Autodial Hide†**	Allows numbers loaded with security option to remain hidden.
23	EE	**Emergency Autodial Enable†**	Enables Emergency Autodialer.
24	ED	**Emergency Autodial Disable†**	Disables Emergency Autodialer.
60	NC	**Dial Needing Click†**	Requires user click to initiate dialing.

59	XC	**Dial Without Click†**	Enables dialing without user click.
68	NR	**No Phone Number Readback†**	Disables phone number readback, enables dialing without user click, and disables autodial location readback.
25	PT	**Patch Timer Enable†**	Enables patch overall and activity timers.
26	PX	**Patch Timer Disable†**	Disables patch timers.
49	TD	**Cover Tone Disable†**	Disables patch cover tone.
50	TE	**Cover Tone Enable†**	Enables patch cover tone - user selected.
51	TA	**Cover Tone Always On†**	Selects patch cover tone for all patches.
69	FD	**Full-Duplex User Selectable†**	Patches are half-duplex unless user selected to be full-duplex.
80	FA	**Full-Duplex Always†**	All patches are full-duplex.
43	—	**Control Op Offhook**	"Manually" takes phone offhook.
44	—	**Control Op Onhook**	Places phone onhook (hangup).

Hints

When controlling from the phone, hang up with Control Op Onhook.

If someone forgets his custom hangup code, hang up with Control Op Onhook.

Emergency Autodial never requires user to click his mike to initiate dialing.

NC, XC, and NR are mutually exclusive.

Disabling all patch timers can be *dangerous*.

Reverse Patch Commands

These commands allow the Control Op to enable or disable the Reverse Patch. He can also select one of four Reverse Patch modes.

45	XE	**Reverse Patch Enable†**	Enables Reverse Patch.
46	XD	**Reverse Patch Disable†**	Disables Reverse Patch.
54	R0	**Reverse Patch Mode 0†**	Selects phone line control /reverse patch.
55	R1	**Reverse Patch Mode 1†**	Selects auto-ringout after 5 seconds.
56	R2	**Reverse Patch Mode 2†**	Selects auto-ringout without answering.
67	R3	**Reverse Patch Mode 3†**	Selects telephone access paging/phone line control.

Warning One or more Reverse Patch modes may not be legal in the Amateur service.

ID Commands

The Control Op can select which ID messages are generated at Pending ID times. Any of the Pending ID messages or the Special ID message can be generated at each Pending ID time, or the controller can rotate between the three Pending ID messages, or between the three Pending ID and the Special ID messages.

29	P1	**Pending ID 1†**	Selects Pending ID 1.
30	P2	**Pending ID 2†**	Selects Pending ID 2.
31	P3	**Pending ID 3†**	Selects Pending ID 3.
32	SP	**Special ID†**	Selects Special ID.
33	RP	**Rotate Pending IDs†**	Rotates Pending ID 1-2-3
34	RS	**Rotate Pending-Special IDs†**	Rotates Pending ID 1-2-3 and Special ID

Hint These commands are mutually exclusive – only one is in effect at a time.

Tail Message Commands

The Control Op can select from three remotely programmable tail messages to be generated occasionally just before the repeater carrier is allowed to drop. He can also disable the tail message function. Tail messages are useful as reminders of events to users, or to indicate repeater status or emergency conditions.

35	T1	**Tail Message 1†**	Selects Tail Message 1.
36	T2	**Tail Message 2†**	Selects Tail Message 2.
37	T3	**Tail Message 3†**	Selects Tail Message 3.
38	TF	**Tail Message Off†**	Disables Tail Messages.

Hint These commands are mutually exclusive – only one is in effect at a time.

Alarm Enable / Disable Commands

The Alarm Enable command arms the site alarm. Disabling the alarm clears an alarm condition latched into the controller and prevents further alarm activation until reenabled.

00	RE	**Alarm Enable†**	Enables site alarm.
15	AD	**Alarm Disable†**	Disables site alarm.

Hint The Alarm Enable is the same as the Repeater Enable command.

Speech Synthesizer Commands

The Control Op can enable or disable the speech synthesizer. The Speech Enable command can reenable the synthesizer after a hardware fault or programming error which results in automatic disabling of the synthesizer. The Speech Disable command is available if the Control Op would like to temporarily shut off speech and revert to Morse code exclusively.

Normally, speech responses are interrupted by a signal at the receiver.

16	SE	**Speech Enable†**	Enables speech synthesizer.
17	SD	**Speech Disable†**	Disables (turns off) speech synthesizer.
39	SI	**Allow Speech Interrupt†**	Speech halted by user signal.
40	SO	**Force Speech Talkover†**	Speech overrides user signal.

Note

When speech is disabled, the Forced CW ID is generated in place of the other ID messages. Other command responses may not completely convert from speech to Morse, so operation in Speech Disable mode should be limited to special circumstances.

Kerchunker Filter Enable/Disable

The Kerchunker filter can be enabled or disabled.

61	KE	**Kerchunker Filter Enable†**	Enables kerchunker filter.
62	KD	**Kerchunker Filter Disable†**	Disables kerchunker filter.

Touch-Tone Mute/ Unmute

The Control Op can cause Touch-Tone to be normally unmuted, although the keys will be evaluated by the command decoder. Unmuting Touch-Tone can be useful to hear tones being sent, to pass tones through to other control systems listening on channel, etc.

63	TM	**Touch-Tone Mute†**	Touch-Tone normally muted
64	TU	**Touch-Tone Unmute†**	Touch-Tone unmuted

Zero Hang Time Mode Enable/Disable

A user transmission is normally followed by a Courtesy Tone and a programmable hang time. The hang time can be forced to zero so that the repeater transmitter directly follows the received signal. This mode can be useful for operating a ShackMaster station located at someone's home and for other purposes.

65 ZD **Zero Hang Time Disable†** Disables zero hang time.
66 ZE **Zero Hang Time Enable†** Enables zero hang time.

Low Courtesy Tone Select

The courtesy tone generated when the Courtesy Tone Select logic input is in the low state can be Control Op selected. (The logic input is internally pulled low so that if nothing is connected, it is in the low state.) This makes it possible for the Courtesy Tone to indicate which Macro Set is selected while allowing a hardware override to the CT input high tone.

70 CT **Courtesy Tone Low Select†** Selects no tone.
71 CT **Courtesy Tone Low Select†** Selects "Bumblebee".
72 CT **Courtesy Tone Low Select†** Selects "Yellow Jacket".
73 CT **Courtesy Tone Low Select†** Selects "Shooting Star".
74 CT **Courtesy Tone Low Select†** Selects "Comet".
75 CT **Courtesy Tone Low Select†** Selects "Stardust".
76 CT **Courtesy Tone Low Select†** Selects "Duncecap".
77 CT **Courtesy Tone Low Select†** Selects "Piano Chord".
78 CT **Courtesy Tone Low Select†** Selects "Boop".
79 CT **Courtesy Tone Low Select†** Selects "Beep".

Initialize Command

The Initialize command causes the computer to perform a "soft restart" and is equivalent to pressing the reset button. The command initializes the state of the board and loads Control Op Macro Set #1. The controller responds to a Reset with the message, "RC-96 Repeater Controller, Version x."

18 — **Reset** Initializes microprocessor.

Chapter 6

Programming the Controller

Introduction

This chapter describes how the RC-96 owner can program the controller, using remote Touch-Tone commands, to customize many of its characteristics, such as messages, timers, user command codes, etc. Programming commands cause information to be stored in the controller's nonvolatile memory so that the information isn't lost if power fails. The various types of Programming commands are described below, along with examples, and are summarized in Appendix C and on the Programming Reference Card and the Message Editor Reference Card.

Unlocking and Locking

The controller is normally "locked," with Programming commands protected and not accessible. Programming commands are accessed by temporarily "unlocking" the controller with a custom unlock command, unique to the controller, that provides security against tampering. When the controller is **unlocked**, **only** Programming commands are recognized.

The "unlock code" is programmed – or changed, if necessary – at the site by the repeater owner with the controller locked.

While the controller is unlocked, the "UL" prompt and, locally, the PGM light on the front panel, indicates that it is waiting for valid Programming commands. Each entry of a valid command reloads a one minute Unlock Timer. If the timer times out, the controller automatically locks back up so it is secure from unintended changes.

The controller is normally locked back up after a series of Programming commands with the # key (## over the phone or from the keypad).

Programming the Unlock Code

The repeater owner can program his favorite ten-digit sequence (excluding # and D) as the controller's unlock code. Simply flip DIP switch 8 ON (up) and enter the desired ten-digit Touch-Tone unlock code over any of the command channels (followed by # if from the front panel keypad). The controller writes the code into its nonvolatile memory and responds by saying, "UL PGM." Then flip DIP switch 8 OFF again. From then on the controller can be unlocked by entering the specified ten-digit code (followed by # over the phone or from the front panel keypad).

The ten digit code should not begin with 5 and should not contain # or D.

Note Be sure to turn off DIP switch 8 after entering the desired unlock code.

Messages

Most of the Morse code and synthesized speech messages are remotely programmable, including IDs, tail messages, Emergency Autodial responses, telephone answer and hangup messages, alarm message, and two Bulletin Board messages.

Messages can only be entered or changed while the controller is unlocked. The message to be edited is selected with the appropriate Touch-Tone Programming command. Then the message is entered based on Morse code character shown below, or speech vocabulary Touch-Tone representation.

Codes for both Morse code **and** speech letters and numbers are based on their position on a telephone keypad (Figure 6-1). The first digit of the code indicates which button the letter appears on, and the second digit indicates whether it's the first, second, or third letter on the button. The letters Q and Z are represented by 70 and 90. Numbers are represented by 00 through 09. This logical layout makes it easy to enter letters and numbers with the Message Editor without having to look up the codes.

The additional synthesized speech vocabulary and Morse code punctuation characters are assigned two and four digit codes.

Morse Code Character Codes

A	21	N	62	0	00	-	10
B	22	O	63	1	01	word space	11
C	23	P	71	2	02	/	12
D	31	Q	70	3	03	AR	13
E	32	R	72	4	04	:	14
F	33	S	73	5	05	?	20
G	41	T	81	6	06	;	24
H	42	U	82	7	07	,	30
I	43	V	83	8	08	.	40
J	51	W	91	9	09	(	50
K	52	X	92			SK	60
L	53	Y	93				
M	61	Z	90				

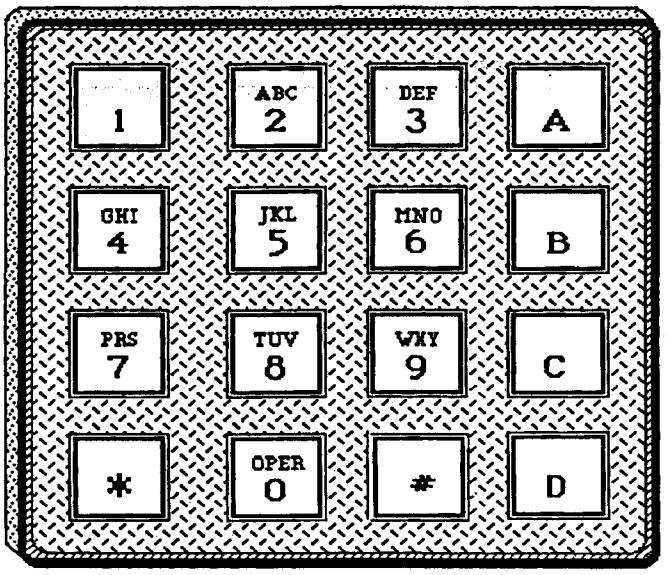

Fig. 6-1. Keypad Layout

Morse code character codes are repeated, and speech synthesizer vocabulary codes are shown, in Appendix C and on the Message Editing Reference Card.

Note

A *pause* in voice messages can be generated using the code 34.

Several Message Editor **commands** control its operation:

Store Message in Memory

***0** When you've completed editing the message and it's correct, it can be stored in the controller's nonvolatile memory by entering *0 (*0# over the phone or from the front panel). There will be a brief delay as it's programming the E²PROM, then the

controller will announce, "Write, UL", indicating a successful write operation and that it's ready for the next Programming command.

Delete Last Character

***1** If you make a mistake in entering a word or character, they can be deleted one at a time in reverse order, beginning with the last one entered, with *1 (*1# over the phone or from the front panel). Each deleted character is read back first for confirmation.

Read Back Message

***2** At any time while editing a message, you can read back what's been entered so far with *2 (*2# over the phone or from the front panel). With long messages, it's a good idea to enter a few characters at a time and occasionally read back the entire message for verification.

Abort Message Editor

***4** At any time while editing a message, you can abort the operation without storing the message with *4 (*4# over the phone or from the front panel) and return to the "UL" prompt, ready to accept additional Programming commands or to lock up the controller.

To illustrate, here are two editing examples – a Morse code ID for the Forced CW ID Message, and a speech Bulletin Board message. First, if the controller is not already unlocked, enter the unlock command. Then select the message to be edited with the command *1001 (*1001# over the phone). The controller responds by saying, "FI" to confirm selection of the Forced CW ID Message. Now you can enter the message you wish with Touch-Tone digits representing the characters you want. When you've entered the message, you can command it to be written into memory, and you're ready for the next Programming command.

Examples

Forced CW ID Message = "WA6AXX/R"

ENTER	RESPONSE	COMMENT
unlock code	UL	Unlock the controller
*1001	FI	Select Forced CWIDMessage
912106	WA6 (cw)	Enter a few characters at a time
219292	AXX (cw)	
1271	/P (cw)	Woe! Error
*1	P (cw)	Delete last character
72	R (cw)	Enter correct character
*2	WA6AXX/R (cw)	Read back message
*0	Write	Store message in memory
	UL	Ready for next Programming command

The next example is a synthesized speech message. You want to load the Bulletin Board Message #1 with "Call the Control Operator for information about tonight's 8:00 meeting. See you later."

ENTER	RESPONSE	COMMENT
unlock code	UL	Unlock the controller
*1123	B1	Bulletin Board 1, speech
*751*444*624	Call the Control	Enter a few at a time
*630*231*996	Operator for information	
*85545*915	about tonight's	
08306035	8:30 meeting.	
342382*956*210	(pause) See you later.	
*2	Call the Control Operator for information about tonight's eight-thirty meeting. See you later.	
*0	Write	Store message in memory
	UL	Ready for next command

Note how the *1 command caused a character in the Morse example to be deleted after readback. In the voice message, several tricks were used: code *915 (-s suffix) after "tonight"; codes 30 and 60 to build up "thir-ty"; code 34 for the pause between sentences; the use of codes 23 and 82 (C and U) to get "See you"; and finally, codes *956 and *210 to make "late-r."

Message Commands

Command		Message Name	Response	Max # of
Morse	Speech			Characters
*1000	*1100	**Initial ID**	II	20
*1001	—	**Forced CW ID**	FI	12
*1002	*1102	**Anxious ID**	AI	12
*1003	*1103	**Pending ID 1**	P1	24
*1004	*1104	**Pending ID 2**	P2	24
*1005	*1105	**Pending ID 3**	P3	24
*1006	*1106	**Special ID**	SI	48
*1007	*1107	**Tail Message 1**	T1	8
*1008	*1108	**Tail Message 2**	T2	8
*1009	*1109	**Tail Message 3**	T3	8
*1010	*1110	**Autodial 0 Service**	E0	6
*1011	*1111	**Autodial 1 Service**	E1	6
*1012	*1112	**Autodial 2 Service**	E2	6
*1013	*1113	**Autodial 3 Service**	E3	6
*1014	*1114	**Autodial 4 Service**	E4	6
*1015	*1115	**Autodial 5 Service**	E5	6
*1016	*1116	**Autodial 6 Service**	E6	6
*1017	*1117	**Autodial 7 Service**	E7	6
*1018	*1118	**Autodial 8 Service**	E8	6
*1019	*1119	**Autodial 9 Service**	E9	6

***1020**	***1120**	**Phone Answer**	PH	16
***1021**	***1121**	**Phone Hangup**	HG	8
***1022**	***1122**	**Alarm**	AL	8
***1023**	***1123**	**Bulletin Board #1**	B1	32
***1024**	***1124**	**Bulletin Board #2**	B2	32
—	***1125**	**Patch Dialing Prefix**	DX	6

(Each message can be either Morse *or* speech, but not both – there is only one storage location per message.)

Hints

Many vocabulary words occupy only one character slot. However, words beginning with *1, *2, *3, *4, or *9 occupy *two* character slots.

The Patch Dialing Prefix is not a message per se, but is the telephone dialing string that can precede all phone patches. For example, if the controller is connected to a PBX, it can be necessary to dial "9 pause" before all calls. Load speech "9 (pause)" into this message.

An *external tape player* can be addressed from any programmable message by selecting the message with the command "*13xx" and loading the message with the Morse letter "X." For example, to have Bulletin Board #2 address the external tape player, enter the command "*1324" and load the character "X" (92), then write the message into memory. See Chapter 8 for details of interfacing the external tape player.

Digital Voice Recorder tracks can be addressed from any programmable message. For example: To load DVR track #20 into Pending ID 1, enter *1303. The controller responds with, "P1." Using the vocabulary codes, enter P20 with 710200. Enter *0 to store the message in memory. See Chapter 8 and the DVR manual for details.

Tone Parameters

The Morse code speed and pitch and the Cover Tone pitch can be changed using these commands; speed is entered directly in words per minute and pitch is entered in Hertz. The Cover Tone can be made inaudible if desired by setting a very low pitch. .

***2000(speed)**	**Morse Code Speed**	speed = 12 - 30 wpm
***2010(pitch)**	**Morse Code Pitch**	pitch = 1 - 3000 Hz
***2020(pitch)**	**Cover Tone Pitch**	pitch = 1 - 3000 Hz

Example

Set the Cover Tone Pitch to 440 Hz.
Unlock the controller. Enter "*2020440" (or "*2020440#" over the phone or from the front panel).
Controller responds with Forced CW ID message at the selected pitch.

Courtesy Tone Selection

Ten different predefined courtesy tone sets are stored in the controller's firmware and can be selected for use. Two courtesy tones are available for normal repeater use, based on the state of the Courtesy Tone Select logic input. The logic input low state tone is selected with a Control Op level command so that it can be stored in a Macro Set (to indicate which macro is selected, among other reasons). The logic input high state tone is selected by the Programming command below and is intended to indicate a special hardware condition. A third selectable tone applies to signals received through the remote base, and it differentiates remote base signals from those on the repeater frequency.

The ten courtesy tone sets are described below – but you really have to hear them for yourself!

CT Set #	Description	CT Set #	Description
0	(no tone)	5	"Stardust"
1	"Bumble Bee"	6	"Duncecap"
2	"Yellow Jacket"	7	"Piano Chord"
3	"Shooting Star"	8	"Boop"
4	"Comet"	9	"Beep"

***3001(ct)**	**CT SEL Logic High Tone**	ct = 0-9	CT
***3002(ct)**	**Link Tone**	ct = 0-9	CT

Hint

If the "no tone" set is selected, users must still wait about 650 ms between transmissions to allow the timeout timer to reset.

Timers

Several of the repeater's timers can be modified, including the hang timer, timeout timers, patch related timers, and tail message timer. The timer value is entered directly in seconds (milliseconds for repeater hang time).

Certain timers can be disabled by setting their value to zero. Those that can safely be disabled are marked with ^. For example, it may be desirable to disable the Emergency Autodial Timer, relying on the activity timer for emergency calls. However, disabling the Tail Message Timer will cause tail messages to be generated at every tail. Disabling the Phone Answer Delay timer will cause the phone never to answer! Be careful!

***4000(period)**	**Repeater Timeout Long^**	(30-1799 sec)	TL
***4001(period)**	**Repeater Timeout Short^**	(15-1799 sec)	TS
***4002(period)**	**Phone Answer Delay**	(10- 60 sec)	PA
***4003(period)**	**Autopatch Timer^**	(0, 60-1799 sec)	AP
***4004(period)**	**User Autodial Timer^**	(0, 60-1799 sec)	AU
***4005(period)**	**Emergency Autodial Timer^**	(0, 60-1799 sec)	AE

*4006(period)	**Patch Activity Timer^**	(0, 30-1799 sec)	AA
*4007(period)	**Patch Timer Extend Timer^**	(0, 30-1799 sec)	TX
*4008(period)	**Tail Message Timer**	(60-1799 sec)	TM
*4009(period)	**Touch-Tone Access Timer^**	(0, 30-1799 sec)	TA
*4010(period)	**Hang Timer**	(750- 9999 ms)	HT
*4011(period)	**Spare Audio Timer**	(0, 15-1799 sec)	SP
*4012(period)	**ID Timer**	(360,660,1440 sec)	ID
*4013(period)	**Reverse Patch Ringout**	(5-60 sec)	RO
*4014(period)	**Talkout Timer**	(1-1799 sec)	TK
*4015(period)	**Alarm Timer**	(0, 1-1799 sec)	AL

Examples

Load the Patch Activity Timer with 45 seconds. While unlocked, enter "*4006 45" all as one transmission, or "*4006 45 #" over the phone.

Load the Hang Timer to 3-1/2 seconds (3500 ms). Enter "*4010 3500."

Hint

Because of the ID algorithm, the maximum period between ID's is the ID timer period plus four minutes. In the Amateur Radio service, set the ID timer to six minutes or less.

Command Code Prefixes

Command code prefixes for Control Operator commands and the various classes of User commands can be changed remotely. The desired prefix is entered directly as part of the Command Code Prefix Programming commands. Each prefix can be 1 to 7 digits long. An empty prefix can be loaded for functions that are not used.

*5000(prefix)	**Control Operator Command**	CMD
*5001(prefix)	**User Function Logic Output**	CMD
*5002(prefix)	**Emergency Autodial**	CMD
*5003(prefix)	**User Loadable Autodial**	CMD
*5004(prefix)	**Autopatch**	CMD
*5005(prefix)	**Link / Remote Base**	CMD
*5006(prefix)	**User Autodial Load / Erase**	CMD
*5007(prefix)	**Demo / Bulletin Board**	CMD
*5008(command)	**Reverse Patch (from phone only)**	CMD
*5009(command)	**Spare Audio (user cancels with #)**	CMD
*5010(prefix)	**Patch Utilities**	CMD
*5011(command)	**Patch Hangup** (load empty cmd to restore #)	CMD
*5012(prefix)	**Two-Tone Paging**	CMD
*5013(prefix)	**Touch-Tone Access Mode Up/Down**	CMD
*5014(command)	**S-Meter Readback**	CMD
*5015(prefix)	**Extended User Autodial (Bank 1)**	CMD
*5016(prefix)	**Extended User Autodial Load/Erase**	CMD
*5017(command)	**Telephone Timer Extend**	CMD

***5018(prefix)**	**Memory Paging**	CMD
***5019(prefix)**	**Touch-Tone Pad Test**	CMD

Hints

To define the Patch Hangup command to be #, load an empty command, i.e., "*5011."

All patch related prefixes can be identical, i.e., *.

Emergency Autodial Numbers

The ten Emergency Autodialer telephone numbers are loaded or changed with these commands.

***520x(telephone number)** (x = autodial location 0-9)

Hints

A location can be erased and left empty by entering nothing for the phone number. For example, to erase slot 3, enter "*5203."

The Emergency Autodial response messages are defined with the Message Editor.

Miscellaneous Selections

Various controller operating modes can be selected with the following Programming commands. Either Touch-Tone or dial-pulse (rotary) signalling into the phone can be selected for patch operation. Control Operator and Programming control can be permitted or not permitted through the repeater receiver (can be prohibited for overall security). The controller can be set up for shared or unshared use of the phone line (see Chapter 8 – Sharing the Phone Line). Finally, the logic sense of the User Function remote control logic outputs can be selected to be low true or high true.

***5400**	**Touch-Tone patch signalling**	TT
***5401**	**Dial Pulse patch signalling**	DP
***5402**	**Enable control over repeater receiver**	EC
***5403**	**Disable control over repeater receiver**	DC
***5404**	**Phone line not shared**	PLU
***5405**	**Phone line shared**	PLS
***5406**	**UF Low True**	FL
***5407**	**UF High True**	FH

Hints

The commands are mutually exclusive in pairs, i.e., you can select TT or DP, EC or DC, PLU or PLS, and FL or FH.

The EC and DC commands may not be entered through the repeater receiver.

Store Macro Sets

The currently active Control Operator enable/disable and mode selections can be stored in one of five "Macro Sets" which can later be selected by the Control Operator with simple commands. One macro select Control Op command in effect performs many Control Op command functions. The macro sets also store the user state of the link/remote base, the UF remote control logic output states, and the Touch-Tone Access Mode up/down state (if enabled).

To store a macro set, set up the repeater in the condition you want stored. A Store Macro Set command takes a "snapshot" of the current setup of the controller and stores it in the nonvolatile memory in set 1, 2, 3, 4 or 5.

***5911**	**Store Macro Set #1**	MACRO
***5912**	**Store Macro Set #2**	MACRO
***5913**	**Store Macro Set #3**	MACRO
***5914**	**Store Macro Set #4**	MACRO
***5915**	**Store Macro Set #5**	MACRO

Pager Memories

The format and address of one thousand pagers can be stored in the controller's memory. Several forms of two-tone sequential, 5/6 tone sequential, and DTMF are supported.

***29 xxx f aaaa(aa)** PAGE

xxx = three digit memory number (000 - 999)

f = pager format

0 = 1 second / 3 second two-tone
1 = 2.7 second / .8 second two-tone
2 = .4 second / .8 second two-tone
3 = 8 second group call
4 = DTMF (all except # and D)
5 = five tone sequential
6 = six tone sequential

aaaa(aa) = pager address

two-tone - A group, A tone, B group, B tone
two-tone group call - A group, A tone, A group, A tone
5/6 tone - wakeup tone, tones 1-5 (six digits)
(for no wakeup tone, insert * as first digit)

Hint

The DTMF pager address can be four or six digits long. If a shorter address is needed, use D as an ending placeholder. For example, an address of 12 would be programmed as 12DD.

2-TONE SEQUENTIAL MOTOROLA TONE FREQUENCIES

TONE #	GROUP 1 CODE	GROUP 1 FREQ	GROUP 2 CODE	GROUP 2 FREQ	GROUP 3 CODE	GROUP 3 FREQ	GROUP 4 CODE	GROUP 4 FREQ	GROUP 5 CODE	GROUP 5 FREQ	GROUP 6 CODE	GROUP 6 FREQ
1	111	349.0	121	600.9	138	288.5	141	339.6	151	584.8	191	1153.4
2	112	368.5	122	634.5	108	296.5	142	358.6	152	617.4	192	1185.2
3	113	389.0	123	669.9	139	304.7	143	378.6	153	651.9	193	1217.8
4	114	410.8	124	707.3	109	313.0	144	399.8	154	688.3	194	1251.4
5	115	433.7	125	746.8	160	953.7	145	422.1	155	726.8	195	1285.8
6	116	457.9	126	788.5	130	979.9	146	445.7	156	767.4	196	1321.2
7	117	483.5	127	832.5	161	1006.9	147	470.5	157	810.2	197	1357.6
8	118	510.5	128	879.0	131	1034.7	148	496.8	158	855.5	198	1395.0
9	119	539.0	129	928.1	162	1063.2	149	524.6	159	903.2	199	1433.4
0	110	330.5	120	569.1	189	1092.4	140	321.7	150	553.9	190	1122.5

GE TYPE 99 TONE FREQUENCIES

TONE #	GROUP 7 FREQ "A"	GROUP 8 FREQ "B"	GROUP 9 FREQ "C"
1	592.5	607.5	712.5
2	757.5	787.5	772.5
3	802.5	832.5	817.5
4	847.5	877.5	862.5
5	892.5	922.5	907.5
6	937.5	967.5	952.5
7	547.5	517.5	532.5
8	727.5	562.5	577.5
9	637.5	697.5	622.5
0	682.5	652.5	667.5

5/6 TONE SEQUENTIAL

TONE	FREQUENCY
0	600
1	741
2	882
3	1023
4	1164
5	1305
6	1446
7	1587
8	1728
9	1869
X	2010
R	459

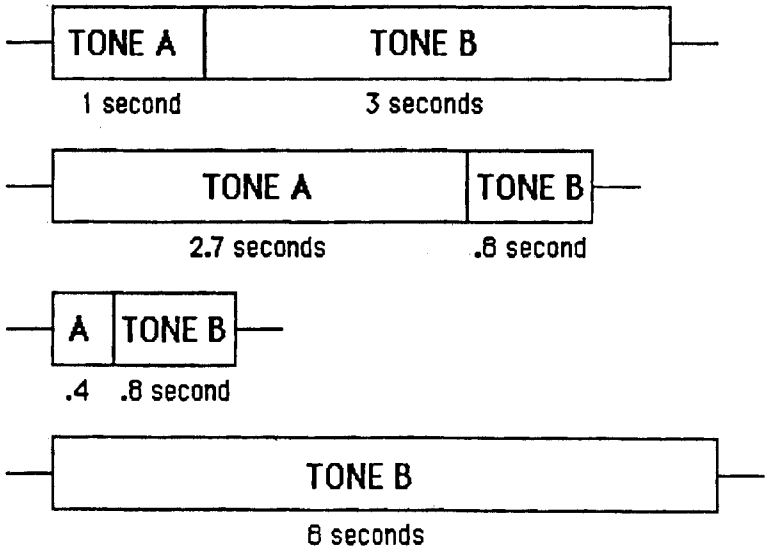

Fig. 6-2. Two-Tone Sequential Timing

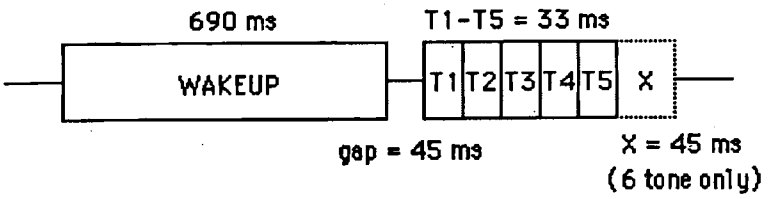

Fig. 6-3. 5/6 Tone Sequential Timing

Tone Panel Frequencies

The frequency of each tone can be set with Programming commands. Tone #1 can be selected for encode or decode. Tones #2-8 are decode only.

***5100x**	**Tone #1 ENCODE or DECODE** (x = 1 Encode; x = 0 Decode)	Tone
***510T FF**	**Tone #T Frequency** (x = 1-8; FF from table below)	Tone

Note

The controller must be "Reset" for Tone Panel commands to take effect. Enter (COP prefix)18 after locking the controller.

CTCSS FREQUENCIES							
01	67.0	**11**	-	**21**	136.5	**31**	192.8
02	71.9	**12**	100.0	**22**	141.3	**32**	203.5
03	74.4	**13**	103.5	**23**	146.2	**33**	210.7
04	77.0	**14**	107.2	**24**	151.4	**34**	218.1
05	79.7	**15**	110.9	**25**	156.7	**35**	225.7
06	82.5	**16**	114.8	**26**	162.2	**36**	233.6
07	85.4	**17**	118.8	**27**	167.9	**37**	241.8
08	88.5	**18**	123.0	**28**	173.8	**38**	250.3
09	91.5	**19**	127.3	**29**	179.9		
10	94.8	**20**	131.8	**30**	186.2		

Fig. 6-4. CTCSS Frequencies

Chapter 7

General Operation

Introduction

The RC-96 Repeater Controller brings your repeater to life by automatically controlling the operation of the system and by responding to Touch-Tone commands from its users. A system block diagram is shown below, illustrating how the controller fits into a typical repeater system.

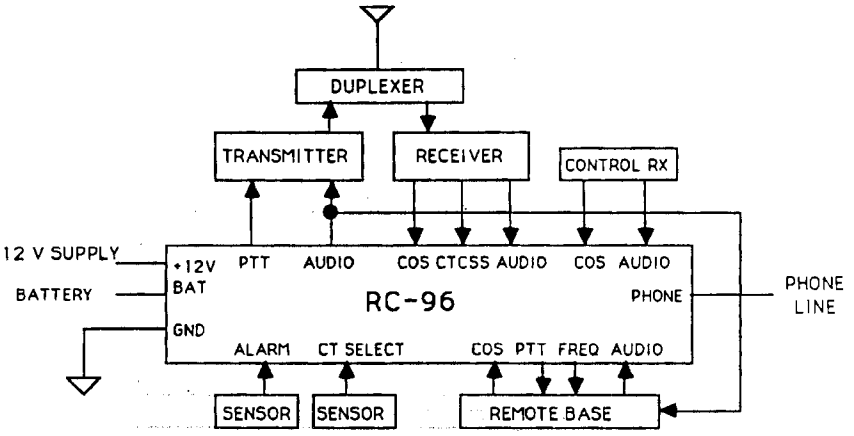

Fig. 7-1. Repeater Block Diagram

The controller's command decoder and command structure were described in detail in Chapter 3. We'll describe here the command channels, along with access modes, ID, courtesy tone, tail messages, and other aspects of the controller's operation.

Command Channels

Commands can be entered from the front panel keypad, over the repeater receiver, the telephone, or through the control receiver. The Touch-Tone decoder is always connnected to one channel based on a prioritization (Figure 7-2).

Front Panel Keypad	**(highest)**
Control Receiver	
Telephone	
Repeater Receiver	**(lowest)**

Fig. 7-2. Priority for Section by Decoder

Control Over the Telephone Line

The Reverse Patch Mode is selectable with Control Operator commands and can be enabled or disabled as well. **Commands entered from the phone or from the front panel must be terminated with the # key.**

Reverse Patch Mode 0
Normal Control Mode

Calls into the repeater's phone line are answered by the controller after a programmable delay. The controller answers with a programmable message, such as "AXX control." The caller then has 15 seconds to enter a valid Touch-Tone command or the controller will hang up.

Valid Control Op and Programming commands automatically reload the timer to two minutes, allowing continuous Control Op activity over the phone. A User-level Telephone Timer Extend command is available for reloading the timer for Digital Voice Recorder related activities and is useful when loading or changing autodial numbers. The controller can also be unlocked to allow Programming commands to be entered.

User commands can be entered over the phone, including the Reverse Patch command code to activate the Reverse Patch. This code causes the transmitter to come up (if not already up) and "ring" for a programmable period or until answered over the air.

Reverse Patch Mode 1
Auto-Ringout After Pause

Mode 1 operates as Mode 0 except it causes the repeater to automatically ringout as a reverse patch five seconds after answering the phone if no valid commands have been entered. This mode doesn't require the caller to have a Touch-Tone phone to use the reverse patch, yet still allows User, Control Op, and Programming control over the phone.

Reverse Patch Mode 2
Ringout Without Answering

Mode 2 causes a ringout over the air without answering the phone for a programmable period or until the reverse patch is answered over the repeater. If Mode 2 is selected, no control functions can be accomplished over the phone.

Reverse Patch Mode 3 Telephone Access Paging / Control

Mode 3 is similar to Mode 0 except that it is optimized for talk-back paging applications. Upon answering the phone, the controller expects a three-digit pager code. The paging sequence is activated over the repeater transmitter, after which the caller is placed on the air for a programmable talkout period. The call can be answered from the repeater and will then proceed as a reverse patch. Otherwise, the controller will hang up after the programmable talkout period.

Instead of entering the pager code, however, the caller can enter Touch-Tone #, which restores control to Mode 0 for the remainder of the call. Callers wishing to initiate a page simply enter three digits. A caller requiring further control enters #, then proceeds. For example, a caller wishing to go directly on the air can enter # followed by the Control Op "Offhook" command.

Access

A high degree of flexibility is provided in access to the repeater and its command structure over the repeater receiver.

Carrier/CTCSS

The optional built-in CTCSS tone panel encoder/decoder, or an external CTCSS logic signal, in conjunction with Control Op commands, allows

1) Carrier access and carrier control
2) Carrier access and User command control, but CTCSS required for Control Operator and Programming control
3) Carrier access, but CTCSS required for User Command, Control Operator, and Programming control
4) CTCSS access and CTCSS control

Touch-Tone

A Touch-Tone Access Mode allows users to bring the repeater up and down with Touch-Tone commands. The Touch-Tone Access Mode offers security, interference immunity, and allows co-sharing a channel with another repeater.

When enabled by the Control Op, this mode can be brought up and down by users with commands, and when brought up, can automatically go back down after a period of inactivity. The Touch-Tone Access Mode timer can be set for any period up to half an hour, or the timer can be disabled (by setting it to zero).

CTCSS /Touch-Tone

The Touch-Tone Access Mode can be used in conjunction with CTCSS access as well. When in CTCSS access, the Touch-Tone Access mode allows non-CTCSS users to access the repeater.

ID Timing and Selection

Repeaters in the U.S. are required to ID at certain intervals, and the timing depends on the service in which they are used. The RC-96 controller offers an intelligent ID algorithm which selects one of seven remotely programmable Morse code and synthesized speech ID messages based on the circumstances.

The ease of remotely programming the ID messages and the custom repeater oriented speech vocabulary allow the repeater owner to include informational messages as part of the ID. Messages such as, "Meeting tonight at 8. This is WA6AXX, Repeater", can be entered in a minute or two.

If the repeater has not been in use for the Pending ID period and a new user comes up, the controller will ID after he unkeys with the "Initial ID Message." This message could say "Hi", or "Welcome", etc., followed by the call sign. If the new user holds his carrier up for a period greater than ten seconds, preventing generation of the Initial ID, the controller will send the "Forced CW ID Message" on top of him so that the repeater is ID'd.

After the Initial ID or Forced CW ID, the Pending ID Timer (programmable) starts to run. When it times out, the controller looks for no repeater activity or for users to let the repeater carrier drop. If they do, the controller sends a "Pending ID Message" at the end of the repeater hang time. The Pending ID can rotate between three ID messages for variety. In addition, a "Special ID Message" can be added to the rotation for special events. The Pending and Special IDs can conveniently contain informational messages, as they occur, without interfering with conversations on the repeater.

If the repeater carrier is not allowed to drop during the Pending ID period (such as if a conversation is in progress), the controller looks for a break between user's transmissions for a period of three minutes to work in the "Anxious ID Message." The Anxious ID could typically be a straight call sign Morse code ID or brief synthesized speech ID to minimize distraction to users.

Finally, if the controller isn't given the opportunity to ID between user's transmissions, it forces a "Forced CW ID Message" over the conversation in progress following timeout of the sixty second Forced CW ID Timer. The cycle then repeats and continues as long as there is repeater activity following an ID.

The suggested value of the Pending ID timer is six minutes (360 seconds) for the Amateur service, eleven minutes (660 seconds) for commercial services, and twenty-six minutes (1560 seconds) for Public Safety services.

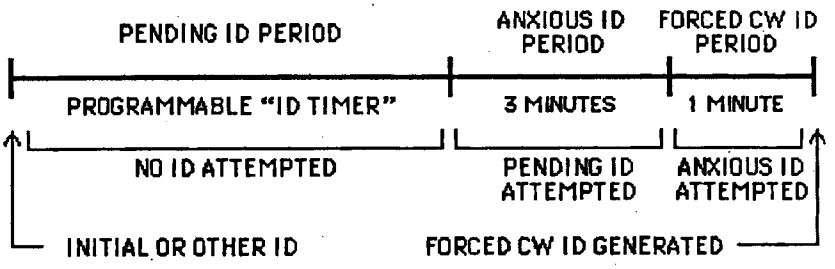

Figure 7-3. ID Timing

Courtesy Tone

Following each user's transmission, the repeater transmitter remains on for a programmable period (hang time) with a courtesy tone provided to indicate that the other user may transmit. The delay to the tone allows other stations to break into the conversation. The fact that the repeater carrier can stay up continuously during a conversation eliminates the "second squelch tail" in the user's receiver, replaced instead by a pleasant, selectable courtesy tone.

Ten different courtesy tone "sets" including "no tone" can be chosen for use on the repeater with Control Op commands. A Courtesy Tone Select logic input to the controller chooses between the Control Op selected set and a second set, selected by a programming command, allowing the courtesy tone to convey information (high/low power, emergency power, etc.). A third selectable tone set indicates a signal received on the link or remote base receiver, differentiating link signals from repeater signals.

Tail Messages

Up to three different tail messages can be programmed with Programming commands and selected for use by the Control Operator. These messages are sent at the end of the hang time, just prior to dropping the transmitter carrier and can remind users of status of the machine or an approaching net or meeting. Some examples of tail messages which could be useful are "Net tonight", or "Weather alert!", or "CTCSS." Tail messages can be composed of any words in the controller's vocabulary or any Morse code characters.

Tail messages are generated when users allow the repeater carrier to drop (at the end of the hang time) so that they don't interrupt a conversation in progress. They also will occur no more frequently than defined by the Tail Message Timer to keep them from becoming annoying. For example, if the Tail Message Timer is set to five minutes, tail messages will not occur more frequently than every five minutes.

Timeout Timer

There are two repeater timeout timers available to limit transmission duration in case of a continuous carrier at the repeater's receiver. Both are programmable and control operator selectable (only one can be selected at a time). The timer resets automatically when the signal at the receiver has gone away for 650 ms. Normally, a courtesy tone is generated at that time. However, if an Anxious ID is waiting, the ID message will be generated in place of the courtesy tone and will be followed by the tone. In either case, the timeout timer resets at the beginning of the courtesy tone or Anxious ID.

If users don't wait for the courtesy tone and the total transmission time between timer resets exceeds the programmable timeout timer value, the controller will announce, "Repeater Time Out", and the transmitter will be shut off. When the signal at the input goes away for at least 650 ms, the transmitter will be re-enabled and will announce "Repeater Time Out Cancel."

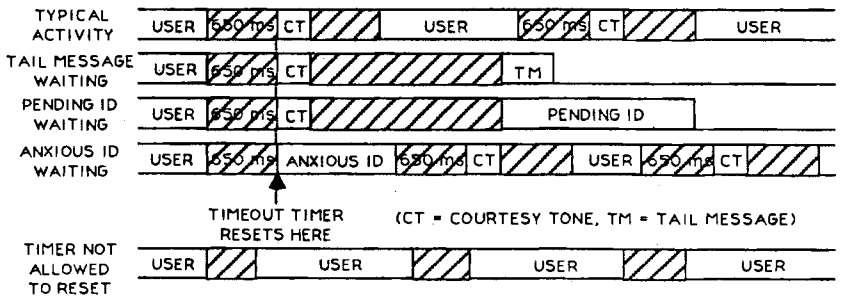

Figure 7-4. Tail Timing Examples

The Control Op can disable the timeout timer and can reset it if it has timed out or is about to time out and the signal is still present at the receiver.

Touch-Tone Muting

Touch-Tone commands through the repeater are normally muted by the controller, both for security and so that users don't have to listen to the tones. Since about 50 ms are required by the controller to detect that tones are present, a short "blip" will be heard on the first and second tones. Following the second tone, the muting overlaps to subsequent tones so that no further blips are heard. (The AD-2 Audio Delay board eliminates these Touch-Tone "blips." See Appendix H for further information.) The controller inserts a cover tone on the transmitter audio to indicate to users that someone is entering a Touch-Tone command. The pitch of the cover tone is programmable.

Users can defeat the controller's Touch-Tone muting to send tones directly through to a linked repeater or to the telephone line if necessary.

The Control Op can disable Touch-Tone muting so that *all* tones pass through the repeater.

Noise and Kerchunker Filtering

The RC-96 controller provides filtering against noise and kerchunking on the repeater receiver. An algorithm filters against spurious noise on the receiver COS logic input, preventing static crashes and random noise bursts from bringing up the repeater. Kerchunker filtering prevents short transmissions from holding up the repeater transmitter, frustrating the kerchunker into making a "real" transmission to see if the repeater is up. The kerchunker filter requires that a user key down for more than 750 ms or an instant hang time is generated. The Kerchunker filter can be enabled or disabled with Control Op level commands.

In the Control Op selectable "Zero Hang Time Mode" neither the noise nor kerchunker filtering apply.

Figure 7-5. Noise Rejection

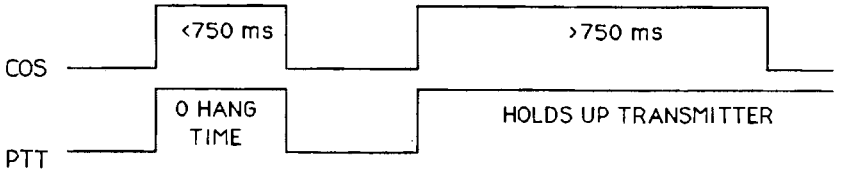

Figure 7-6. Kerchunker Filtering

Chapter 8

Interfacing to Other Equipment

Introduction

The basic hookup of the RC-96 controller to the repeater system was described in detail in Chapter 2. There are many additional features of the controller which may optionally be used in your repeater. This chapter describes interfacing of those additional features to your repeater system.

CTCSS Decoder

REPEATER connector, pin 5

An optional external CTCSS decoder may be connected to the RC-96 controller to permit CTCSS access and/or control. (An internal remotely programmable tone panel is also available as a built-in option. See Appendix I for its installation instructions.)

Any decoder with an active high logic output may connect to the CTCSS Logic Input on the Repeater connector pin 5. A logic low must be less than .8 volts, and a logic high greater than 2.4 volts. If the decoder's output is "open-collector", tie a pullup resistor, approximately 10K, from the output to the 12 volt supply.

A popular tone decoder is the Communications Specialists TS-32P. The diagram below shows how the TS-32 may interface with the repeater receiver and the RC-96 controller (it is shown for CTCSS *decode* only – the encode section may be used as you wish). The active high logic output (OUT-2) may drive the controller CTCSS logic input (Repeater connector pin 5) with a 10K pullup resistor to +12 volts. **It's necessary to ground the hang-up pin on the TS-32 to enable decoding.**

Audio into the TS-32 Tone Input should come from a point in the receiver where sub-audible tones have not been filtered out – the

proper point is receiver dependent and in some cases audio must be taken directly from the discriminator. Other receivers have wide frequency response, and sub-audible tone is present at later points throughout the receiver.

The TS-32 includes a high pass filter which may be wired in-line with the receiver audio to the controller. The high pass filter removes the sub-audible tone components from the received signal so that they are not retransmitted. Use of the high pass filter in your installation is optional. Some systems are designed to allow user CTCSS to pass unaffected, others filter out CTCSS, and still others regenerate CTCSS on the repeater transmitter.

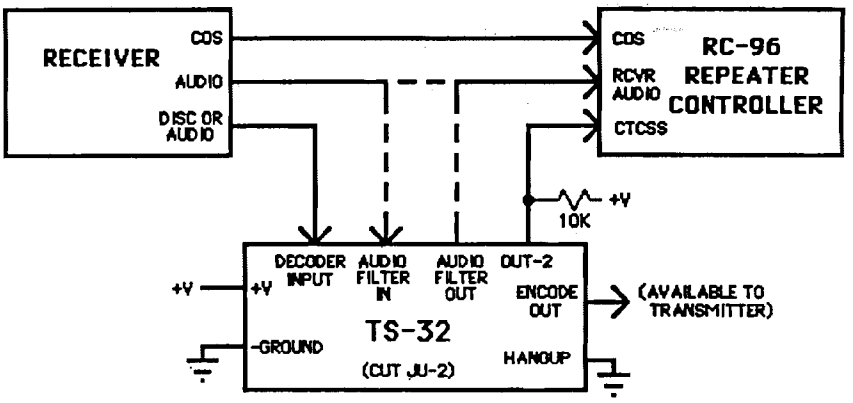

Fig. 8-1. Communications Specialists TS-32 Subaudible Tone Decoder Interface

Talking S-Meter

REPEATER connector, pin 3

The controller is capable of measuring a 0-5 volt S-meter signal and reading back the measurement to the user in synthesized speech on command. The signal should be conditioned if necessary to range from zero volts (S0) to approximately four volts (S9 plus 60) and should drive the Repeater connector pin 3. The signal may range between zero and twelve volts without damaging the controller.

As an example, the diagram below shows the connection of a Spectrum Communications SCR-200 S-meter signal output to the RC-96 controller. The meter should be disconnected and a 10K resistor placed from the signal output to ground. The signal may drive the controller directly. The resistor divides down the S-meter signal to an approximately zero to five volt range and also provides a discharge path for the emitter follower transistor in the receiver's S-meter circuit.

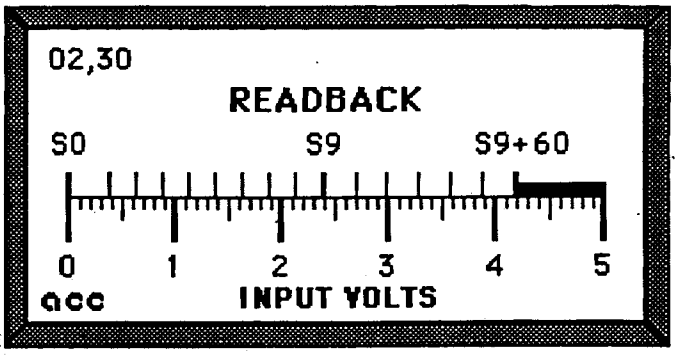

Fig. 8-2. S-Meter (S-units, DB over S9)

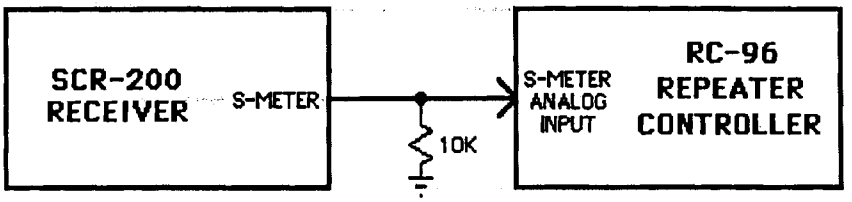

Fig. 8-3. S-Meter Interface to Spectrum SCR-200

Control Receiver

CNTL RX connector, pins 1 and 7

An independent receiver may function as a control receiver and have command priority over other command channels in the system (repeater receiver and phone). The control receiver audio may connect to the Control Receiver connector pin 7 and should be in the range of .5 to 2.5 volts peak-to-peak.

The COS signal should connect to the Control Receiver connector pin 1. The COS may be high true or low true. DIP switch 3 should be set based on its logic sense – ON for high true, OFF for low true. If a control receiver is not connected, DIP switch 3 *must* be ON.

For greater security, a CTCSS decode signal from the control receiver can replace the COS signal. CTCSS would need to be transmitted on the control channel to activate the control receiver function.

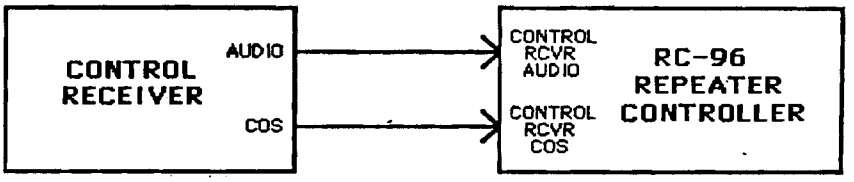

Fig. 8-4. Control Receiver Interface

Site Alarm

R/C connector, pin 1

The Site Alarm logic input to the controller provides an over-the-air alarm announcement when the alarm logic input is taken high. The alarm message is programmed with the Alarm Message Programming command. The site alarm may be used as an indication of intrusion, over-temperature, water on the floor, or even as a weather radio storm alert or aviation ELT warning.

The alarm is activated by applying a high logic signal (2.4 - 15 volts) to the Alarm Input at R/C connector pin 1. The alarm signal can be derived from other circuitry, such as a temperature sensor, or from a normally open switch which applies a voltage to the Alarm input when closed. Alternatively, for more security in intrusion detection applications, a pull-up resistor on the board can be grounded by a normally closed switch, and if the switch is opened or if wires are cut, the alarm will be activated.

Activation of the site alarm causes the alarm message to be announced over the repeater transmitter at 15 second intervals, until cleared by a Control Op or until the Alarm Timer times out. The alarm condition is latching – meaning that once the logic input is taken high, the alarm condition continues even if the logic input is returned low. This insures that detectors such as limit switches for intrusion detect cause a continuing alarm that does not cancel once the switch is closed. The alarm condition should be removed before the alarm is re-enabled.

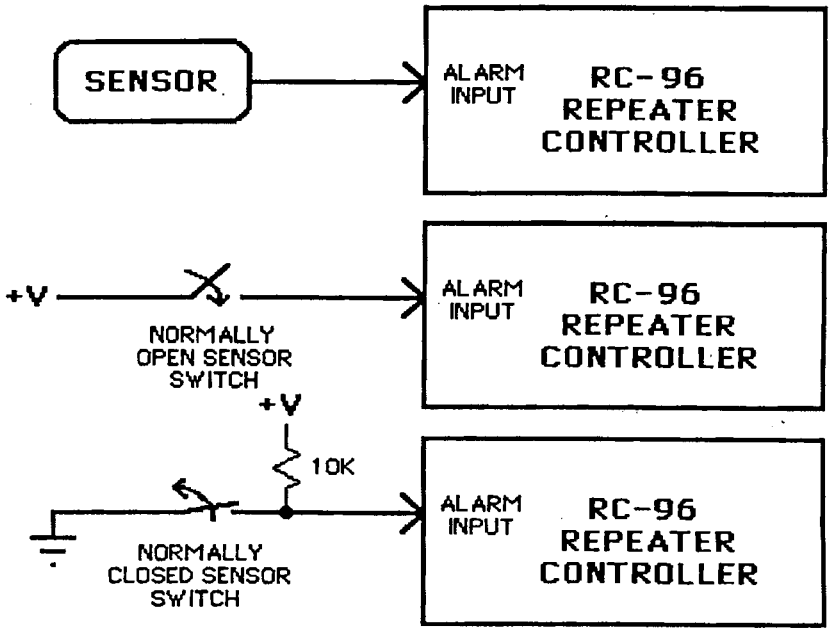

Fig. 8-5. Site Alarm Applications

Remote Control Outputs

R/C connector, pins 3, 4 and 5
Also at LINK connector, pins 3 and 5

The RC-96 controller provides three open collector high voltage, high current remote control logic output functions which can be controlled by Touch-Tone commands. The remote control logic outputs can be used for such functions as high/low power select, antenna select, or control of other equipment at the repeater site.

The three outputs are commanded with the User Function user commands and may be forced on or off, and may be interrogated. When any output is interrogated, a short (2ms) pulse is generated on that output – that is, the output toggles to the opposite state and back. The pulse is too short to disturb equipment being controlled, but long enough to trigger a one-shot or 555 timer to stretch to any duration required.

Two logic outputs may have dedicated functions when certain options are selected. If commanded to the "Phone Line Shared" mode with a Programming command, Control Output 3 (UF 3) becomes an active low Phone Line In-Use output, which may be or-tied with other controllers at the site to indicate that another controller is currently using the phone line. See "Sharing the Phone Line" later in this chapter.

An external cartridge tape player may be interfaced to the controller to play ID, tail, or Bulletin Board messages. The activation of these messages when loaded properly with the Message Editor can cause a one second pulse to be generated at Control Output 2 (UF 2) to start the external device. The controller then monitors the External Device Busy logic input for indication of completion of the recorded message. See "External Tape Player" later in this chapter for details.

Expanded Remote Control Outputs

R/C connector, pins 3, 4 and 5
Also at LINK connector, pins 3 and 5

An alternative mode (DIP switch selectable) uses the outputs to serially shift out eight remote control logic functions plus remote base frequency information (see next section) – a total of 24 bits. The eight remote control output functions permit more extensive remote control of equipment at the site at the expense of several external IC's required to capture the data. The FC-1 Frequency Control Board is available from ACC for this purpose as is the FC-900 Interface.

In the expanded mode, the User Function outputs appear at the shift register outputs, just as they appeared directly at the control outputs in the direct mode. The logic sense of the UF outputs

may be inverted with a Programming command, which may be useful when buffering the recovered outputs with open collector transistors, as in the FC-1 Frequency Control Board.

MODE / OUTPUT	DIRECT UF OUTPUT	BCD SYNTHESIZED LINK/REMOTE AND EXPANDED UF OUTPUTS
CX1	UF 1	SERIAL DATA
CX2	UF 2	SERIAL CLOCK
CX3	UF 3	SERIAL TRANSFER
DIP SW SETTINGS	SW4, 5, 6, 7 OFF	SW4 ON SW5, 6, 7 OFF

Fig. 8-6. Control Output Mode Selections

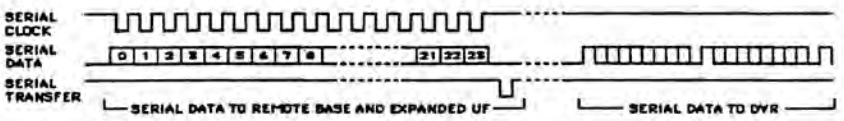

Fig. 8-7. Serial Timing and Data Bit Definitions

0	UF1	8	MHz D0	16	10's KHz D0
1	UF2	9	MHz D1	17	10's KHz D1
2	UF3	10	MHz D2	18	10's KHz D2
3	UF4	11	MHz D3	19	10's KHz D3
4	UF5	12	PLUS/$\overline{\text{MINUS}}$	20	100's KHz D0
5	UF6	13	SIMPLX/$\overline{\text{DUPLX}}$	21	100's KHz D1
6	UF7	14	5/$\overline{0}$ KHz	22	100's KHz D2
7	UF8	15	LINK ON/$\overline{\text{OFF}}$	23	100's KHz D3

USER FUNCTIONS

LINK / REMOTE BASE

Fig. 8-8. Serial Data Bit Definitions

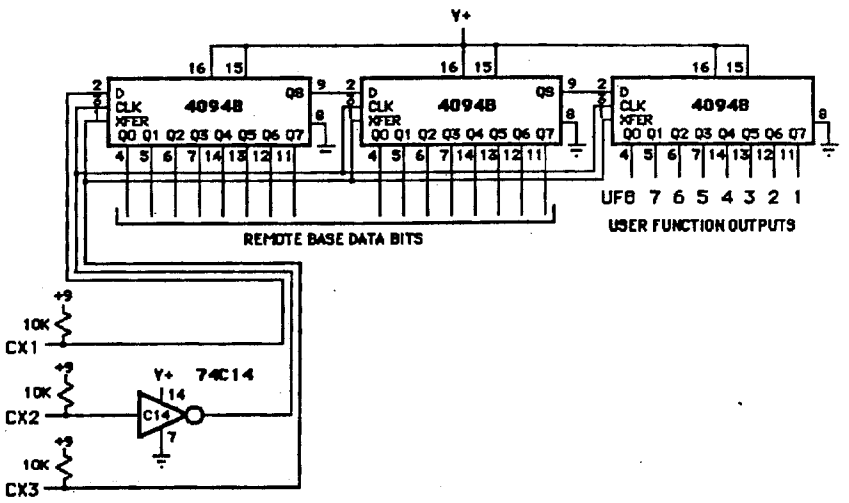

Fig. 8-9. Recovering UF Outputs and Remote Base Frequency Information

Link / Remote Base

LINK connector, pins 1, 4, 6 and 7

Touch-Tone user commands allow control of a transceiver which may tie the repeater to other frequencies. When the link is activated, a signal at the repeater receiver keys the link PTT, and a received signal on the link transceiver keys the repeater PTT.

In addition to activating the link function with Touch-Tone commands, the frequency of the link transceiver may be commanded. The hardware interfaces allow remote control of the remote base frequency. Synthesized speech readback of the frequency verifies command entry.

A fixed frequency link or remote base transceiver may be controlled by the RC-96 controller by connecting link PTT, link COS, link receiver audio, and by driving the link transmitter with repeater transmitter audio.

BCD Frequency Interface

External shift register ICs capture the data shifted out of the controller and at the same time may perform any level translation required in interfacing to a particular radio. The format of the BCD frequency data is compatible with the ACC RC-850 Repeater Controller (Link 1), the RC-85 Repeater Controller, and the ITC-32 Intelligent Touch-Tone Control Board.

Shown below is circuitry suitable for capturing the serial frequency information for interface to an ICOM IC-22U two meter transceiver as a synthesized remote base. Other BCD controlled radios may be used as well, such as the ICOM IC2/3/4A, and many others. The FC-1 Frequency Control Board supplies the

interface circuitry to the IC2/3/4A transceivers. Because offset circuitry design varies from rig to rig, use of other transceivers may require custom design.

As a reminder, controller DIP switches must be set properly to accommodate the BCD interface. Turn 4 on and 5, 6, and 7 off.

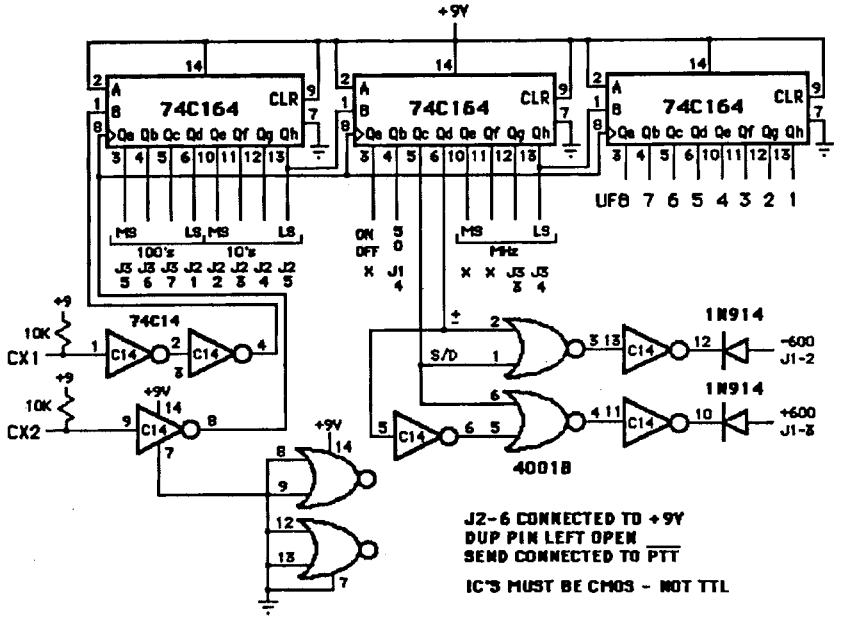

Fig. 8-10. IC-22U Synthesizer Interface

FC-900 Interface

LINK connector, all pins (cable connection)

The FC-900 Interface connects the RC-96 Repeater Controller to the ICOM IC-900A Super Multi-Bander System band units for an easy-to-hook-up remote base or link installation. The FC-900 provides the electronic interface to the ICOM internal bus; transmit audio processing including pre-emphasis, symmetrical limiter, and level and deviation controls; receive audio processing including squelch pots for each band unit, de-emphasis, and squelch gating; programmable CTCSS encode; and recovery of seven general purpose remote control (UF) outputs.

The controller software is responsible for controlling the internal circuitry of the band units, including the frequency synthesizer and other basic radio functions.

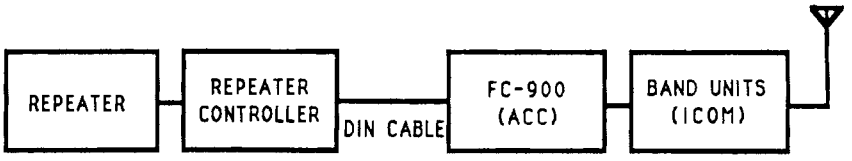

Fig. 8-11. ACC Remote Base System Diagram

Mechanical Hookup

The mechanical hookup of the FC-900 Interface is shown below. It mounts on the top of the stack of the available band units and bolts together using mounting brackets supplied with the band units. Use the ACC supplied screws for bolting in the FC-900. The mounting brackets should be configured as shown in the diagram.

The 15 pin cable supplied with each band unit connects it to the band unit mounted above it. The cable from the top band unit connects to the plug in the FC-900. The bottom connector of the bottom band unit does not connect to anything. The band units may be stacked in any order. *No additional mounting brackets or 15 pin jumper cables are needed.*

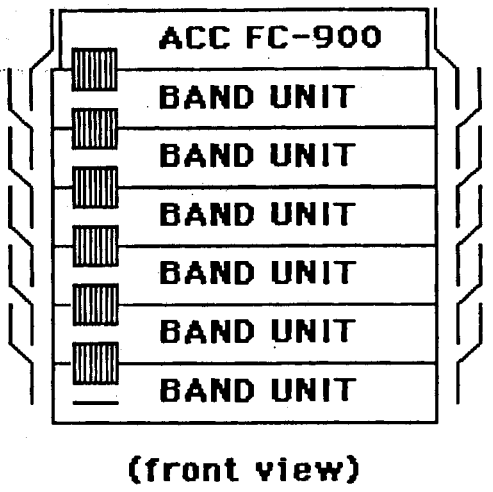

Fig. 8-12. FC-900 Interface Mechanical Hookup

Power

The ICOM band units operate from +12 volts which must be supplied from a power supply capable of supplying high current on a continuous basis. In addition, the FC-900 requires +12 volts at 25 mA.

The band units are intended to plug into ICOM's Interface Unit B (which you don't have) which has six mating Molex power connectors. Instead, cables which mate to the band unit connectors are available through ICOM dealers. Alternatively, a power bus may be wired using mating Molex connectors or pins. The mating connectors are also available through ICOM dealers.

At most one unit will be in transmit and one in receive. Transmit current ranges from 1.5A (10M low power) to 9.5A (2M 45 watt high power). Refer to the specifications for your band units for details.

The low and high power levels of each band unit are internally adjustable. It may be desirable, depending on the application, air circulation and power available, to back down on one or both power levels (see band unit documentation). If extended high power operation is anticipated, consideration should be given to adding a fan for forced air cooling of the heat sinks. ICOM's CF-11 Cooling Fan Unit is not supported by the FC-900 interface.

The FC-900 power connector is a barrel jack which is compatible with many wall mount power supplies (center pin positive!). Alternatively, the supplied barrel plug may be wired to your 12 volt power supply.

The FC-900 interface connects directly to the RC-96 controller through a supplied one-to-one DIN cable, from RC-96 LINK connector to the FC-900 J2 connector.

Adjustments

Several adjustments must be made after installation. Because the band units must be operating to make the adjustments, it will be necessary to read Chapter 4 to learn how to command the transceivers. The adjustments are straightforward to make after the units are turned on.

Squelch Pots – Pots R104-R109 are adjusted for the desired squelch setting when the respective band unit is selected. Bring up the band unit in receive-only and adjust the respective pot (each pot is labeled on the board by band).

Transmit Level – R103 adjusts the level of the transmit audio applied to the limiter in the FC-900. It should be adjusted so that transmit audio just enters clipping (at the cathode of CR5). If the transmit audio level out of the controller is very low, it may be necessary to clip jumper JP3 to increase the input gain to approach clipping.

Transmit Deviation – R102 determines the amplitude of limited audio applied to the modulators in the band units. It should be adjusted for 3-5 kHz peak deviation.

CTCSS – R101 determines the level of the CTCSS signal applied to the modulator. It should be adjusted for ~800 Hz deviation when a CTCSS tone is selected.

Link Receive Audio Level – Adjust RC-96 controller rear panel pot LRX. Remember that Link 2 audio will be about half the level of Link 1 (this allows mixing link audios without blasting).

As a reminder, *controller* DIP switches must be set properly to accommodate the FC-900 interface. Turn 4 and 7 ON and 5 and 6 OFF.

Jumpers JP1 and JP2 should be left installed. Jumper JP3 may need to be removed to increase input sensitivity (see Transmit Level section above).

Expanded User Function Remote Control Outputs

In addition to controlling the IC-900 band units, the FC-900 Interface can recover seven expanded User Function remote control outputs supplied by the controllers. (The limitation to seven rather than eight is due to the seven bit width of the IC-900 control word.) The outputs are available at connector J4, with pinout shown below. Outputs are open collector and are low true. Miscellaneous functions such as phone line busy output, external device strobe, etc. appear at these outputs.

Signal	Pin	Signal	Pin
UF1	1	UF5	5
UF2	2	UF6	6
UF3	3	UF7	7
UF4	4	GND	8 and shield

Spare Audio

LINK connector, pins 1 and 7

User commands may allow selection of a weather radio, scanner, or other audio source. The audio input shares the Link / Remote Base receiver input and is available if the link function is not used. The audio is gated to the transmitter under computer control in response to the user commands, and the transmitter PTT is held active. The audio may be continuously present at the controller's audio input and no control signals to or from the audio source are required, except that the Link COS input (pin 1) should be taken high (i.e., to +12 volts).

Note

Retransmission of another radio service through the Amateur service may not be legal.

External Tape Player

LINK or R/C connector, pin 5

DVR connector, pins 1 and 7

An external tape playback unit may be interfaced to the controller and addressed by any of the programmable messages. Examples of applications would include a tape recorded ID message or Bulletin Board accessible message.

When the controller generates a message which has been specified as an external device (*13xx message loaded with Morse

"X" – see Chapter 6 – Messages), a one second low going start pulse appears at User Function 2 (Control Output 2, or in the expanded mode at the recovered UF2). The controller then monitors the External Device Busy logic input until the signal goes low indicating end of message. Audio from the external device may drive the Transmitter Audio Mixer Input (DVR connector pin 1) and should be level adjusted externally. The external device timer (failsafe timeout) is fixed at 75 seconds.

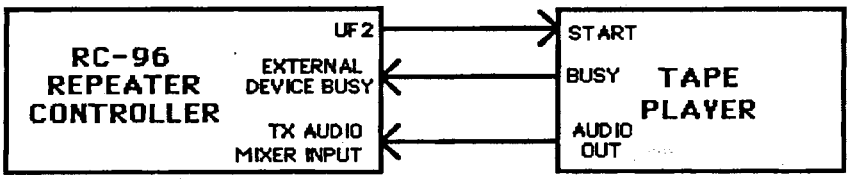

Fig. 8-13. External Tape Player Interface

Digital Voice Recorder

DVR connector, all pins (cable connection)

ACC's Digital Voice Recorder may interface to the RC-96 controller so that any of the remotely recordable "tracks" may be addressed through the Message Editor. Control signals are passed to the DVR through Control Output 1 (Serial Data, DVR connector pin 4) as part of the serial data stream supplied at that output in the expanded remote control output mode. Information from the DVR is supplied to the RC-96 controller through the External Device Busy logic input (pin 7, blue). Audio from the DVR drives the Transmitter Audio Mixer input (pin 1, black) and may be level adjusted in the DVR. Receive audio should be adjusted to 5 volts peak-to-peak and the Tone-Tone audio should be adjusted to 1 volt peak-to-peak.

A 2.2K ohm pull-up resistor must be installed on the serial data line at the DVR to 5 or 12 volts. See the Digital Voice Recorder manual, page 2-6, for details. Additional operational instructions for use of the Digital Voice Recorder with the RC-96 controller are supplied with the DVR.

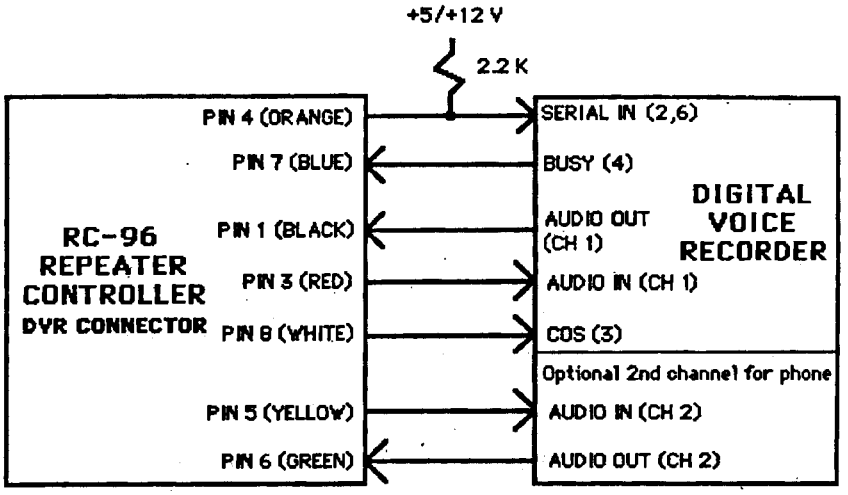

Fig. 8-14. Digital Voice Recorder Interface

Sharing the Phone Line

R/C connector, pins 4 and 6

Several controllers at a repeater site can share one phone line with handshaking among controllers to indicate when the phone line is in use. When the "Phone Line Shared" mode is selected with a Programming command, User Function 3 becomes a low true phone line busy output, which may be or-tied with other controller's busy outputs. The signals are also connected to all the controllers' Phone Line Busy inputs. When a user attempts to bring up the patch, and the phone line is in use by another controller, the RC-96 controller responds by saying, "Busy". If the phone line is not in use, the patch proceeds, and the RC-96 controller pulls the busy output low to indicate to other controllers that the phone line is now in use.

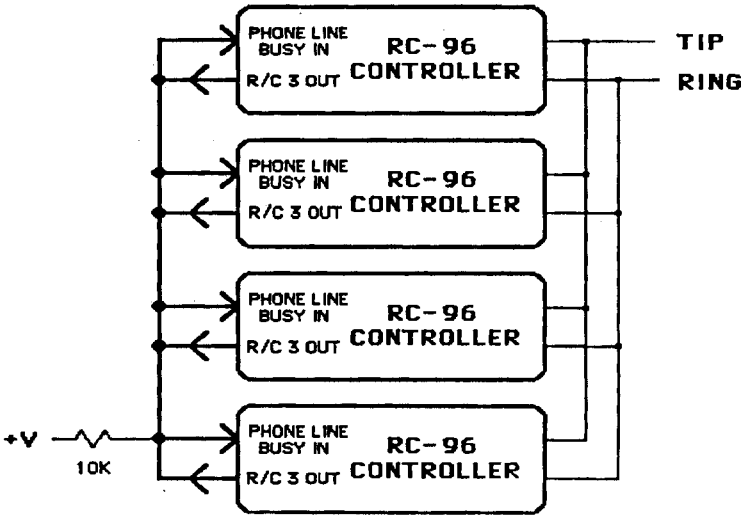

Fig. 8-15. Multiple Controllers Sharing a Phone Line

Chapter 9

How It Works

The RC-96 Repeater Controller is centered around a microcomputer with a software program contained in EPROM memory. Program stored in EPROM means that the controller is ready to go as soon as it's powered up. The microcomputer detects the logic inputs to the system and the Touch-Tone decoder information and controls the logic outputs, audio switching and mixing, speech synthesizer, and other circuits. More importantly, the computer directs operation of the various features of the controller, such as remote programming, autopatch, remote base linking, etc.

A block diagram of the RC-96 controller is shown on page 87. The major functional blocks include the microcomputer, audio switching and mixing circuits, buffered I/O, speech synthesizer, tone generator, Touch-Tone decoder, and telephone interface. In addition, various protective circuits ensure reliable long term operation with automatic error recovery.

The microcomputer consists of an 8085 microprocessor (U25) with 80K bytes or more of EPROM program memory (U29, U34), 8K of E^2PROM re-programmable non-volatile memory (U31), 8K of RAM (U30), and various I/O circuits. Remotely programmed information is stored in the E^2PROM.

The CPU is automatically reset on powerup and will be reset whenever the voltage to the CPU drops below its specification. The 8085 multiplexed address/data bus is demultiplexed by the 74HC373 octal latch (U32), and its address space is decoded by the PAL10L8 decoder (U33).

The audio switching and mixing circuits consist of two active mixers, one for audio driving the repeater transmitter, and one for audio to the phone line. Selection of active sources into each mixer is supervised by the computer program in response to normal repeater operation and user commands.

The logic outputs from the board for transmitter PTT and general remote control functions are output ports buffered by high voltage/high current (60 V, 500 mA) VMOS FET transistors. The logic inputs are buffered by an integrated transistor array which provides a universal logic level compatibility.

The speech synthesizer (U23) interfaces to the CPU through I/O ports and is controlled by the microcomputer program. The pot R109 adjustment sets the synthesizer clock frequency, setting the pitch of the voice.

The tone generator (U26) creates Morse code, courtesy tone, and Touch-Tone audio under control of the computer program.

The Touch-Tone receiver (U14) may connect to any of the audio input channels under control of the computer program. The receiver detects Touch-Tone audio and sends the information to the microcomputer to permit command evaluation.

The telephone interface provides the protective coupling between the op amp audio signals and logic control signals and the telephone line. It includes ring detect, off-hook control, impedance matching, and isolation.

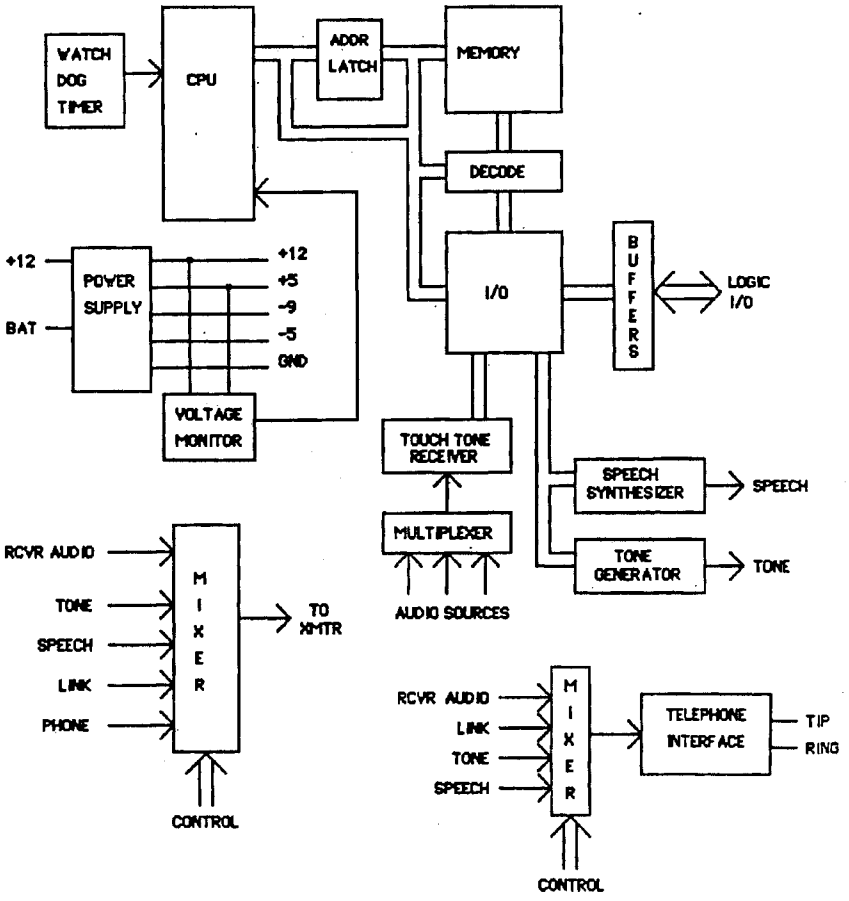

Fig. 9-1. System Diagram

Chapter 10

In Case of Difficulty

Maintenance

The RC-96 controller is designed conservatively with high quality, reliable components, and it is very unlikely that a component failure will take the controller out of service. No periodic maintenance is necessary to ensure long life. Internal transient suppressors on each I/O lead and a three terminal gas discharge tube across the phone line minimize impact of lightning on all equipment in the system. Follow common sense in installing the controller, such as avoiding locating it in extremely hot or dirty areas. You should expect your RC-96 controller to run virtually forever.

Servicing

However, since Zap the Lightning God has been known to visit repeater sites, it's possible that it may become necessary to repair the controller at some time in its service life. Even though the RC-96 controller includes transient protection to minimize the possibility of damage, this protection should be supplemented with sound site engineering to minimize impact of lightning on all equipment in the system.

Of course, the controller may be returned to the factory for repair, but it would be desirable to attempt to diagnose and repair failures at the site when possible to minimize repeater down time. While all potential failure modes can't be anticipated, the guidelines will help isolate the problem to a particular component or area.

In general, hardware failures can be classified into two broad categories – those where the computer executes its program correctly, and those where it executes garbage or nothing at all. If the computer is executing its program correctly, as evidenced

by partial operation of the controller, the failure is probably a peripheral or interface circuit. Otherwise, the problem is probably the CPU, memory, or decoding circuitry.

General Checklist

- ICs firmly seated in sockets?
- Cable connectors properly inserted?
- +12 volt and ground connected properly?
- DIP switches set correctly and firmly?
- Any components hot? (careful!)

TROUBLE	PROBABLE CAUSE	REMEDY
Computer Dead	+12 volt supply not present	
	Defective supply	Repair supply
	Defective power wiring	Repair wiring
	+5 volt supply not present	
	Defective 7805 regulator	Replace regulator
	Defective IC overloading regulator	Locate and replace defective IC
	Oscillator not running	Replace xtal Y2
No audio	-9 volt supply not present	Trace "V-"
Distorted Audio	Excessive input level	Reduce input level
	Excessive deviation	Reduce deviation control in transmitter
Logic Inputs Not Sensed	Defective input buffer	Replace U5
Logic Outputs Not Operating	Need pullup resistor to define high level	Add pullup resistor
	Defective output port	Replace 74HC595
	Defective output buffer	Replace IRFD113 transistor
Touch-Tone Decode Unreliable	Audio clipping throughout system	Reduce level
	Excessive twist	Flatten system frequency response

Most Often Asked Questions (and Answers)

The controller doesn't mute Touch-Tone and doesn't decode any commands.
Check DIP switch 3 – this selects the control receiver COS logic sense. If you don't have a control receiver, switch 3 should be ON. If not, the controller thinks that the control receiver is active, and the Touch-Tone decoder is monitoring the control receiver audio input – not the repeater receiver.

Touch-Tone doesn't always decode. Why not?
The dynamic range of the Touch-Tone decoder is very wide so that if the receiver audio to the controller is between a few hundred millivolts and 2.5 volts peak-to-peak, it should decode. But some mobile and portable rigs transmit tone levels very hot, which causes clipping of the tones in the user's transmitter. If the level is hot enough to distort, the only solution is to reduce the tone level in the user's rig so that it transmits clean Touch-Tone.

Another possibility is that the # key isn't pushed following the input of commands from a phone or from the front panel. The # key acts as the terminator key and must be entered for commands to be decoded.

Other possibilities are non-flat frequency response somewhere between the user's transmitter and the controller, which causes the two tones of the Touch-Tone to be greatly different in level.

There are several other things to check. If you have a control receiver, be sure that it's squelch isn't opening when you don't suspect it is. Perhaps someone is calling the repeater on the phone, grabbing the Touch-Tone decoder. Be careful about who you give out your repeater number to.

The patch won't dial the phone number – it just reads back the number and beeps.
Don't forget that you need to "click" your mike during the pause to initiate dialing, unless you select the Control Op mode "Dial without click" or "No phone number readback".

Why won't the controller accept commands from the phone?
Don't forget to terminate all Touch-Tone commands over the phone with a #. The # tells the controller to evaluate the command – without it, it'll just sit there.

Do I need to store a Control Op Macro Set whenever I make a change?
Only if you want changes in the Control Op setup to be stored for powerup or macro selection.

I don't measure anything on the logic outputs. Why not?
The logic outputs are open collector transistors. The transistor is either on, so that there's a path to ground, or it's an open circuit. To see a logic voltage level, you need to add a pullup resistor to define the logic high when the transistor is off. It's very tricky to try to measure resistance of the transistor output with an ohmmeter – don't try it. Just connect a pullup and look for a voltage.

I can't enter commands for a while after the controller hangs up the phone. What's going on?
When the controller hangs up, the phone company sometimes reverses the battery ("winks"), and this can be seen by the controller as a ring, so it picks up the phone again. Set the Phone Answer Delay timer longer than about 10 seconds. Just before the controller answers the phone, it looks back in time eight seconds to see if the phone was still ringing in that period. With a longer answer delay time, it will reject the "wink" as a ring.

How do I change the Patch Hangup code back to #?
Enter the Command Code Prefix Programming command with an "empty" prefix, i.e., *5011 with nothing following. This tells the controller to look for a # for hangup.

Do I need to enter *0 to actually write programming information into E²PROM?
No. The *0 command applies only to the message editor, so use it to write an edited message, but nothing else.

What information is stored in the E²PROM?
All Programming commands result in storage of information in the E²PROM. Messages are stored after entering the *0. Control Op setup information is written into the E²PROM only when storing a Control Op Macro Set with the Programming command. All User Loadable Autodial Load/Erase commands also write to the E²PROM.

When I programmed something with a Programming command, the controller said, "E R, Write". What's wrong?
The "E R" message indicates that there was a problem writing into the E²PROM. If you get this message, contact the factory to help determine the nature of the failure.

How many digits can be in the autodial numbers?
All 200 autodial locations (10 Emergency and 190 User Loadable) may contain up to 11 digit phone numbers.

Why does the voice response wait up to a few seconds when I enter a Programming command?

It's programming the E²PROM which takes about 100 ms per byte. The Special ID, as an example, will take almost 5 seconds to program – it's normal.

If the Touch-Tone Access Mode is enabled but down, will a reverse patch come through?
Yes. A reverse patch will bring up the TT Access Mode and load the Touch-Tone Access Mode timer. Assuming the timer is non-zero, it will time itself back down if there's no activity.

Sometimes when entering the Link Receive Only command, the controller reads back the frequency and other times it reads back "Receive". What is the rule?
If the frequency is set to all zeros, it says, "Receive". Otherwise it reads back the frequency.

When making a patch, there's a slightly longer delay until it starts to dial. Why?
To avoid falsing the phone company's Touch-Tone decoder, the controller waits until it's finished "talking" before going offhook. Then it waits 1.5 seconds before starting to dial.

The controller doesn't always ID when the Touch-Tone Access Mode goes down. How come?
Generally it will ID when going down only when it's necessary, i.e., there has been some activity since the last ID. For example, if the Touch-Tone Access Mode timer is set to 20 minutes, if no activity causes it to time out, it won't generally be necessary to ID because it would have completed the ID cycle several minutes earlier.

What's the patch Activity Timer for?
The activity timer causes a patch to be terminated if the mobile drives out of range or otherwise goes away. The timer resets at the beginning and end of each transmission. If it's allowed to time out (no carrier or stuck carrier), there's a warning warble, and if there's still no "activity" within 10 seconds, it will hang up. The patch activity timer can be used along with, or instead of, the overall patch timers.

Some voices seem to false the Touch-Tone decoder. How can this be changed?
One end of diode CR16 can be lifted. This slows the Touch-Tone decoder from decoding 20 digits/second to 10 digits/second.

When I change the courtesy tone, the controller says, "CT", but the courtesy tone doesn't change. Why?

The courtesy tone isn't being changed because the logic high tone is being changed with a programming command instead of the logic low tone with the control operator command.

I can't put the controller into any of the CTCSS access modes from over the air. Why not?
Remember that the repeater must detect CTCSS on your signal for the controller to accept the CTCSS mode commands.

Sometimes my repeater mysteriously goes off and the repeater enable command will not turn it back on. Why not?
The Touch-Tone access mode is enabled and timed out. Bring up the repeater with the Touch-Tone Up user command or disable the Touch-Tone access mode with the Control Operator Touch-Tone Access Mode Disable command.

Appendix A

User Commands

Touch-Tone Pad Test
(Pad Test Prefix) (sequence of up to 32 keys)

Autopatch
(Autopatch Prefix) (telephone number)

User Loadable Autodial Load
(Autodial Load/Erase Prefix)(Location)(Phone Number) or
(Autodial Load/Erase Prefix)*(Location)(Phone Number)
[phone number secured from readback]

User Loadable Autodial Erase
(Autodial Load/Erase Prefix) (Location)

V5 **User Loadable Autodial Readback**
(Autodial Load/Erase Prefix)*(Location)

User Loadable Autodial
(User Loadable Autodial Prefix) (Location)

Emergency Autodial
(Emergency Autodial Prefix) (Location)

Reverse Patch Activate (from phone only)
(Reverse Patch Command)#

Reverse Patch Answer
(Patch Utility Prefix)

Extending the Telephone Timer (from phone only)
(Telephone Timer Extend Command)#

Patch Hangup
(Patch Hangup Command)

Patch Custom Hangup Code
(Patch Utility Prefix) (any 3 keys except # or D)

Patch Redial
(Patch Utility Prefix) *

Patch Full-Duplex
(Patch Utility Prefix) *1

Patch Cover Tone
(Patch Utility Prefix) *2

Patch Timer Extend
(Patch Utility Prefix) *3

BCD or Fixed Frequency Link / Remote Base

(Link Prefix) 1	Link On Receive Only
(Link Prefix) 2	Link On Receive/Transmit
(Link Prefix) 3	Link Off
(Link Prefix) (mhtof)	Link Frequency
(Link Prefix) (m*htof)	Link Frequency

FC-900 Link / Remote Base

(Link Prefix) 1	Link 1 On Receive Only
(Link Prefix) 2	Link 1 Receive/Transmit
(Link Prefix) 3	Link 1 Off
(Link Prefix) 4	Link 2 On Receive Only
(Link Prefix) 6	Link 2 Off
(Link Prefix) *	Swap Link 1 / Link 2 Bands
(Link Prefix) 1 x	Link 1 Band Select
(Link Prefix) 4 x	Link 2 Band Select

x = 0	1240	7	420
1	10 meter	8	1280
2	2 meter	9	1290
3	220	A	1270 (±20 MHz)
4	440	B	1270 (±12 MHz)
5	430	C	1250
6	6 meter		

(Link Prefix) (mhtof)	Link 1 Frequency
(Link Prefix) (m*htof)	Link 1 Frequency
(Link Prefix) 1 (m*htof)	Link 1 Frequency
(Link Prefix) 4 (m*htof)	Link 2 Frequency
(Link Prefix) 1 *	Link 1 Power Interrogate
(Link Prefix) 1 * 1	Link 1 High Power
(Link Prefix) 1 * 0	Link 1 Low Power
(Link Prefix) 7 xx	CTCSS Select (00=off, 01-38=on)

V5

HF Remote Base

(HF Prefix) 1 Receive Only
(HF Prefix) 2 Receive/Transmit
(HF Prefix) 3 Off

(HF Prefix) 8 Frequency Interrogate
(HF Prefix) (10M)M*HT(O(h(t))))
Frequency Enter

(HF Prefix) 6 Bump Up 100 Hz
(HF Prefix) 4 Bump Down 100 Hz
(HF Prefix) 9 Bump Up 500 Hz
(HF Prefix) 7 Bump Down 500 Hz
(HF Prefix) A Bump Up 20 Hz
(HF Prefix) B Bump Down 20 Hz

(HF Prefix) 7 1 Scan Down Slow
(HF Prefix) 7 3 Scan Up Slow
(HF Prefix) 7 4 Scan Down Medium
(HF Prefix) 7 6 Scan Up Medium
(HF Prefix) 7 7 Scan Down Fast
(HF Prefix) 7 9 Scan Up Fast
Carrier Stop Scan

(HF Prefix) 1 (mode) Mode (1=USB, 2=LSB, 3=AM, 4=FM)
(HF Prefix) 5 (00-99) Memory
(HF Prefix) 5 Return to VFO A

S-Meter Readback

(S-Meter Command)

Demonstration / Bulletin Board

(Demo Prefix) (0 - 8, *)
(0 = Initial ID Message)
(1 = Forced ID Message)
(2 = Anxious ID Message)
(3 = Pending ID Message 1)
(4 = Pending ID Message 2)
(5 = Pending ID Message 3)
(6 = Special ID Message)
(7 = Bulletin Board Message 1)
(8 = Bulletin Board Message 2)
V5 (9 = Time of Day Announcement)
(* = Firmware Revison Announcement)

Unmuting Touch-Tone

(sequence)

Two-Tone Paging
(2-Tone Paging Prefix)(A Group number)(A Tone number)(B Group number)(B Tone number)

(2-Tone Paging Prefix)(Group number)(Tone number)[group call]

Memory Paging
(Memory Paging Prefix) xxx
xxx = 000 - 999

Touch-Tone Access
(TT Access Mode Prefix) 0 [down]
(TT Access Mode Prefix) 1 [up]

Spare Audio Select
(Spare Audio Command)
knock down

User Function (Remote Control) Output Force & Interrogate
(UF Prefix) (Output #1-8) (1 = on, 0 = off)
(UF Prefix) (Output #1-8) Interrogate

Appendix B

Control Operator Commands

Macro Set Selection Commands

1	M1	**Macro Set 1 Select**	Selects Control Op Macro Set #1.
2	M2	**Macro Set 2 Select**	Selects Control Op Macro Set #2.
3	M3	**Macro Set 3 Select**	Selects Control Op Macro Set #3.
4	M4	**Macro Set 4 Select**	Selects Control Op Macro Set #4.
5	M5	**Macro Set 5 Select**	Selects Control Op Macro Set #5.
V5 100	1-5	**Interrogate Currently Selected Macro Set**	
V5 101	S on	**Scheduler On**	Enables scheduler.
V5 102	S off	**Scheduler Off**	Disables scheduler.
V5 103	on/off	**Interrogate Scheduler On / Off**	

Repeater Enable / Disable Commands

00	RE	**Repeater Enable**	Enables repeater transmitter.
01	RD	**Repeater Disable**	Disables repeater transmitter.

Repeater Timer Commands

02	TE	**Repeater Timer Enable**	Enables repeater timeout timer.
03	TD	**Repeater Timer Disable**	Disables repeater timeout timer.
04	TL	**Repeater Timer Long**	Selects long timeout timer.
05	TS	**Repeater Timer Short**	Selects short timeout timer.
06	TC	**Clear Repeater Timer**	Cancels timeout condition, clears timer.
65	ZD	**Zero Hang Time Disable**	Disables zero hang time.
66	ZE	**Zero Hang Time Enable**	Enable zero hang time.

Access / Control Commands

07	CA	**Carrier Access / Control**	Enables carrier access and control.

	08	PC	**CTCSS COP Command**	Enables carrier access, CTCSS required for Control Op Touch-Tone commands.
	09	PU	**CTCSS COP/User Cmd**	Enables carrier access, CTCSS required for Control Op and User commands.
	10	PL	**CTCSS Access**	CTCSS required for access and control.
	52	ME	**TT Access Mode Enable**	Enables Touch-Tone Access Mode.
	53	MD	**TT Access Mode Disable**	Disables Touch-Tone Access Mode.
	61	KE	**Kerchunker Filter Enable**	Enables kerchunker filter.
	62	KD	**Kerchunker Filter Disable**	Disables kerchunker filter.
V5	110		**Keyup Counter**	Say number of keyups.

<u>User Command Enable / Disable Commands</u>

	11	CE	**User Command Enable**	Enables User Touch-Tone commands.
	12	CD	**User Command Disable**	Disables User Touch-Tone commands.
	41	TE	**Pad Test Enable**	Enables Touch-Tone Pad Test.
	42	TD	**Pad Test Disable**	Disables Touch-Tone Pad Test.
	63	TM	**Touch-Tone Mute**	Mutes Touch-Tone through the repeater.
	64	TU	**Touch-Tone Unmute**	Unmutes Touch-Tone through the repeater.

<u>Link Enable / Disable Commands</u>

	13	LE	**Link Enable**	Enables link / remote base.
	14	LD	**Link Disable**	Disables link / remote base.
V5	105	2E	**FC-900 Link 2 Enable**	Enables FC-900 Link 2.
V5	106	2D	**FC-900 Link 2 Disable**	Disables FC-900 Link 2.
V5	107	HE	**HF Remote Base Enable**	Enables HF remote.
V5	108	HD	**HF Remote Base Disable**	Disables HF remote.

<u>Autopatch / Autodial Commands</u>

	19	PE	**Autopatch Enable**	Enables Autopatch.
	20	PD	**Autopatch Disable**	Disables Autopatch.
	27	LE	**Long Distance Enable**	Enables Autopatch long distance.
	28	LD	**Long Distance Disable**	Disables Autopatch long distance.
	21	UE	**User Autodial Enable**	Enables User Loadable Autodialer.
	22	UD	**User Autodial Disable**	Disables User Loadable Autodialer.

47	AU	**User Autodial Unlock**	Unlocks User Loadable Autodialer.
48	AL	**User Autodial Lock**	Locks User Loadable Autodialer.
57	UU	**User Autodial Unhide**	Allows secured numbers to be read back.
58	UH	**User Autodial Hide**	Secures autodial numbers loaded w/option.
23	EE	**Emergency Autodial Enable**	Enables Emergency Autodialer.
24	ED	**Emergency Autodial Disable**	Disables Emergency Autodialer.
60	NC	**Dial Needing Click**	Requires user click to initiate dialing.
59	XC	**Dial Without Click**	Enables dialing without user click.
68	NR	**No Phone Number Readback**	Disables phone number readback and disables autodial location read-back and enables dialing without user click.
25	PT	**Patch Timer Enable**	Enables patch timers.
26	PX	**Patch Timer Disable**	Disables patch timers.
49	TD	**Cover Tone Disable**	Disables patch cover tone.
50	TE	**Cover Tone Enable**	Enables patch cover tone - user selected.
51	TA	**Cover Tone Always On**	Enables patch cover tone for all patches.
69	FD	**Full-Duplex User Selectable ('96 only)**	Patches are half-duplex unless user selected to be full-duplex.
80	FA	**Full-Duplex Always ('96)**	All patches are full-duplex.
43	—	**Control Op Offhook**	"Manually" takes phone offhook.
44	—	**Control Op Onhook**	Places phone onhook (hangup).

Reverse Patch Commands

45	XE	**Reverse Patch Enable**	Enables Reverse Patch.
46	XD	**Reverse Patch Disable**	Disables Reverse Patch.
54	R0	**Reverse Patch Mode 0**	Selects phone control mode.
55	R1	**Reverse Patch Mode 1**	Selects automatic ringout after 5 sec.
56	R2	**Reverse Patch Mode 2**	Selects auto. ringout w/out answering.
67	R3	**Reverse Patch Mode 3**	Selects telephone access paging/phone line control.
V5 109	R3	**Reverse Patch Mode 4**	Places caller directly on air.
V5 104	NA	**Don't Answer Phone For 2 Minutes**	

ID Commands

29	P1	**Pending ID 1**	Selects Pending ID 1.
30	P2	**Pending ID 2**	Selects Pending ID 2.
31	P3	**Pending ID 3**	Selects Pending ID 3.
32	SP	**Special ID**	Selects Special ID.
33	RP	**Rotate Pending IDs**	Rotates Pending ID 1-2-3.
34	RS	**Rotate Pending-Special IDs**	Rotates Pending ID 1-2-3 - Special ID.

Tail Message Commands

35	T1	**Tail Message 1**	Selects Tail Message 1.
36	T2	**Tail Message 2**	Selects Tail Message 2.
37	T3	**Tail Message 3**	Selects Tail Message 3.
38	TF	**Tail Message Off**	Disables Tail Messages.

Alarm Enable / Disable Commands

00	RE	**Alarm Enable**	Enables site alarm.
15	AD	**Alarm Disable**	Disables site alarm.

Speech Synthesizer Commands

16	SE	**Speech Enable**	Enables speech synthesizer.
17	SD	**Speech Disable**	Disables (turns off) speech synthesizer.
39	SI	**Allow Speech Interrupt**	Speech halted by user signal.
40	SO	**Force Speech Talkover**	Speech overrides user signal.

Tone Panel Commands ('96 only, requires Tone Panel Option)

81-88	1E-8E	**Tone 1-8 Enable**	Enables CTCSS tone 1-8.
91-98	1D-8D	**Tone 1-8 Disable**	Disables CTCSS tone 1-8.

Logic Low Courtesy Tone Select

70	CT	**Select Courtesy Tone 0**	No tone
71	CT	**Select Courtesy Tone 1**	Bumblebee
72	CT	**Select Courtesy Tone 2**	Yellow Jacket
73	CT	**Select Courtesy Tone 3**	Shooting Star
74	CT	**Select Courtesy Tone 4**	Comet
75	CT	**Select Courtesy Tone 5**	Stardust
76	CT	**Select Courtesy Tone 6**	Dunce Cap
77	CT	**Select Courtesy Tone 7**	Piano Chord
78	CT	**Select Courtesy Tone 8**	Boop
79	CT	**Select Courtesy Tone 9**	Beep

Initialize Command

18	—	**Reset**	Initializes controller, loads Macro Set 1.

Appendix C

Programming Commands

	Morse	Speech			
	*1000	*1100	Initial ID	I I	20
	*1001	—	Forced CW ID	FI	12
	*1002	*1102	Anxious ID	AI	12
	*1003	*1103	Pending ID 1	P1	24
	*1004	*1104	Pending ID 2	P2	24
	*1005	*1105	Pending ID 3	P3	24
	*1006	*1106	Special ID	SI	48
	*1007	*1107	Tail Message 1	T1	8
	*1008	*1108	Tail Message 2	T2	8
	*1009	*1109	Tail Message 3	T3	8
	*1010-9	*1110-9	Autodial 0-9 Service	E0-E9	6
	*1020	*1120	Phone Answer	PH	16
	*1021	*1121	Phone Hangup	HG	8
	*1022	*1122	Alarm	AL	8
	*1023	*1123	Bulletin Board #1	B1	32
	*1024	*1124	Bulletin Board #2	B2	32
	—	*1125	Patch Dialing Prefix	DX	6
V5	—	*1126	Permitted Area Code 1	P1	4
V5	—	*1127	Permitted Area Code 2	P2	4
V5	—	*1128	Permitted Area Code 3	P3	4
V5	—	*1129	Permitted Area Code 4	P4	4
V5	—	*1130	Permitted Area Code 5	P5	4
V5	—	*1131	Max. # "Local" Digits (7 or 8)	LD	1

Tone Parameters

*2000(speed)	Morse Code Speed	speed = 12-30 wpm
*2010(pitch)	Morse Code Pitch	pitch = 0-3000 Hz
*2020(pitch)	Cover Tone Pitch	pitch = 0-3000 Hz

Courtesy Tone Selection

*3001(ct)	CT SEL Logic High Tone	ct = 0-9	CT
*3002(ct)	Link Tone	ct = 0-9	CT

Timers

*4000(period)	Repeater Timeout Long	(≈30-1799 sec)	TL
*4001(period)	Repeater Timeout Short	(≈15-1799 sec)	TS
*4002(period)	Phone Answer Delay	(≈10-≈60 sec)	PA
*4003(period)	Autopatch Timer	(0, ≈60-1799 sec)	AP
*4004(period)	User Autodial Timer	(0, ≈60-1799 sec)	AU
*4005(period)	Emerg. Autodial Timer	(0, ≈60-1799 sec)	AE
*4006(period)	Patch Activity Timer	(0, ≈30-1799 sec)	AA
*4007(period)	Patch Timer Extend Timer	(0, ≈30-1799 sec)	TX
*4008(period)	Tail Message Timer	(≈60-1799 sec)	TM
*4009(period)	Touch-Tone Access Timer	(0, ≈30-1799 sec)	TA
*4010(period)	Hang Timer	(≈750-≈5000 ms)	HT
*4011(period)	Spare Audio Timer	(0,≈30-≈1799 sec)	SP
*4012(period)	ID Timer	(amateur - 360 sec, commercial - 540 or 1140 sec)	ID
*4013(period)	Ringout Timer	(≈10 - 120 sec)	RO
*4014(period)	Mode 3 Paging Talkout Timer	(≈10 - 60 sec)	TK
*4015(period)	Alarm Timer	(0, ≈10 - 1799 sec)	AL

V5

Clock, Calendar and Scheduler

*4100 AP H10 H1 M10 M1	Set Time (12 hr mode)	time
*4100 H10 H1 M10 M1	Set Time (24 hr mode)	time
*4101 M10 M1 D10 D1 Y10 Y1	Set Date	DATE
*4102 DOW	Set Day of Week	DOW
*420S Nth DOW AP H10 H1 M10 M1 M#	Define Setpoint (12 hr mode)	SETPT
*420S Nth DOW H10 H1 M10 M1 M#	Define Setpoint (24 hr mode)	SETPT

Tone Panel Frequency Selection (requires Tone Panel Option)

*5100 x	Tone #1 Encode (x=1) or Decode (x=0)	TONE
*510T FF	Tone (T) 1-8 Frequency Selection (FF)	TONE

V5

[Tone #1/FF – 39=Regen. when mobile present, 40=Regen. continuous, 41=Lockout/regen. when mobile present, 42=Lockout/regen. continuous]

Command Code Prefixes

*5000(prefix)	Control Operator Command	CMD
*5001(prefix)	User Function Logic Output	CMD
*5002(prefix)	Emergency Autodial	CMD
*5003(prefix)	User Loadable Autodial	CMD
*5004(prefix)	Autopatch	CMD
*5005(prefix)	Link / Remote Base	CMD
*5006(prefix)	User Autodial Load / Erase	CMD
*5007(prefix)	Demo / Bulletin Board	CMD
*5008(command)	Reverse Patch (from phone only)	CMD
*5009(command)	Spare Audio	CMD
*5010(prefix)	Patch Utilities	CMD
*5011(command)	Patch Hangup	CMD
*5012(prefix)	Two-Tone Paging	CMD

	*5013(prefix)	Touch-Tone Access Mode Up/Down	CMD
	*5014(command)	S-Meter Readback	CMD
	*5015(prefix)	Extended User Autodial (Bank 1)	CMD
	*5016(prefix)	Extended User Autodial Load/Erase	CMD
	*5017(command)	Telephone Timer Extend Command	CMD
	*5018(prefix)	Memory Paging	CMD
	*5019(prefix)	Touch-Tone Pad Test	CMD
V5	*5020(prefix)	HF Remote Base	CMD

Emergency Autodial Numbers

*520x(telephone number) x = location 0 - 9 Phone number

V5 FC-900 Band Unit Configuration

*530B P Band Unit Present / Absent FCBU

B: band unit (1=10M,2=6M,3=2M,4=220,5=440,6=1200)

P: present / absent (1=present, 0=absent)

Misc. Selections

*5400	Touch-Tone patch signalling	TT
*5401	Dial Pulse signalling	DP
*5402	Enable control over repeater receiver	EC
*5403	Disable control over repeater receiver	DC
*5404	Phone line not shared	PLU
*5405	Phone line shared	PLS
*5406	UF Low True	FL
*5407	UF High True	FH
*5408	UF Strobe High True ('85 only)	STH
*5409	UF Strobe Low True ('85 only)	STL
V5 *5410	Link COS Low True	CL
V5 *5411	Link COS High True	CH

Store Macro Sets 1-5

*5911-*5915 Store Macro Set #1 - #5 MACRO

Pager Memories ('96 only)

*29 xxx f aaaa(aa) PAGE

xxx = three digit memory number (000-999)

f = pager format

0 = 1 second/3 second 2-tone 4 = DTMF

1 = 2.7 second/.8 second 2-tone 5 = five tone sequential

2 = .4 second/.8 second 2-tone 6 = six tone sequential

3 = 8 second group call

aaaa(aa) = pager address

two-tone – A group, A tone, B group, B tone

two-tone group call – A group, A tone, A group, A tone

DTMF – 4 or 6 digits (0-9, *, A, B, C), fill unused digits with D keys

5/6 tone – wakeup tone, tones 1-5 (six digits) [for no wakeup tone, insert * as first digit]

Vocabulary

(PAUSE)	34	BELOW	*143
		BETWEEN	*660
A	21	BLOWING	*144
A.M.	*110	BOARD	*145
ABORT	*992	BOOST	*146
ABOUT	*855	BOZO	*147
ABOVE	*112	BRAKE	*148
ACKNOWLEDGE	*114	BRAVO	*622
ACTION	*115	BREAK	*743
ADJUST	*944	BROKEN	*151
ADVANCED	*916	BUTTON	*993
ADVISE	*116	BY	*152
AERIAL	*117		
AFFIRMATIVE	*118	C	23
AFTERNOON†	*842	CABIN	*153
AIR	*120	CALIBRATE	*735
AIRPORT	*122	CALL	*751
ALERT	40	CALLING	*155
ALL	*685	CALM	*156
ALOFT	*124	CANCEL	*664
ALPHA	*621	CAUTION	*711
ALTERNATE	*125	CEILING	*158
ALTITUDE	*127	CENTER	*161
AMATEUR	*917	CHANGE	*875
AMPS	*831	CHARLIE	*623
AND	74	CHECK	*865
ANSWER	*128	CIRCUIT	*720
APRIL	*131	CLEAR	*163
AREA	*713	CLIMB	*165
ARRIVAL	*132	CLOCK	*945
AS	*133	CLOSED	*166
AT	*742	CLUB	*926
AUGUST	*135	CODE	75
AUTO	*918	COME	*167
AUTOMATIC	*741	COMPLETE	*721
AUTOPILOT	*136	COMPUTER	*927
AUXILIARY	*137	CONDITION	*168
		CONGRATULATIONS	*170
B	22	CONNECT	*940
BAND	*138	CONTACT	*171
BANK	*140	CONTROL	*624
BASE	*141	CONVERGING	*172
BATTERY	*142		

COUNT	*173	EQUAL	*893
COURSE	*174	-ER(suffix)	*210
CRANE	*950	ERROR	*211
CROSSWIND	*175	ESTIMATED	*212
CURRENT	*177	EVACUATE	*213
CYCLE	*951	EVACUATION	*214
		EVENING†	*843
D	31	EXIT	*761
DANGER	*712	EXPECT	*215
DAYS	*952		
DAYTON	*928	F	33
DECEMBER	*181	FAIL	*755
DECREASE	*182	FAILURE	*216
DECREASING	*183	FARAD	*930
DEGREES	*722	FARENHEIT	*217
DELTA	*631	FAST	*925
DEPARTURE	*185	FEBRUARY	*218
DEVICE	*953	FEET	15
DIAL	*936	FIF-(prefix)	50
DINNER	*186	FIFTEEN†	*854
DIRECTION	*752	FIFTY†	*850
DISPLAY	*954	FILED	*223
DOOR	*955	FINAL	*224
DOWN	*654	FIRE	*634
DOWNWIND	*188	FIRST	*225
DRIVE	*190	FIVE	05
DRIZZLE	*191	FIVE†	*805
DUST	*192	FLAPS	*227
		FLIGHT	*228
E	32	FLOW	*960
EAST	*754	FOG	*230
ECHO	*632	FOR	*231
-ED(suffix)	*193	FORTY†	*840
EIGHT	08	FOUR	04
EIGHT†	*808	FOUR†	*804
EIGHTEEN†	*884	FOURTEEN†	*814
ELECTRICIAN	*943	FOURTH	*234
ELEVATION	*196	FOXTROT	*633
ELEVEN	11	FREEDOM	*235
ELEVEN†	*811	FREEZING	*236
EMERGENCY	*937	FREQUENCY	*610
ENGINE	*198	FRIDAY	*237
ENTER	*995	FROM	64

FRONT	*238
FULL	*241
G	41
GALLONS	*991
GATE	*845
GAUGE	*961
GEAR	*244
GET	*962
GLIDE	*245
GO	*895
GOLF	*641
GOOD†	*834
GREEN	*762
GROUND	*248
GUSTING TO	*250
H	42
HAIL	*251
HALF	*252
HAM	*938
HAMFEST	*946
HAMVENTION	*947
HAVE	*253
HAZARDOUS	*254
HAZE	*255
HEAVY	*257
HELP	*258
HENRY	*260
HERTZ	*684
HIGH	*763
HOLD	*963
HOME	*615
HOTEL	*642
HOUR	*261
HOURS	*655
HUNDRED	*640
I	43
ICE	*262
ICING	*263
IDENTIFY	*264
IGNITE	*266
IGNITION	*267
IMMEDIATELY	*268
IN	*270
INBOUND	*271
INCH	*964
INCREASE	*272
INCREASING TO	*274
INDIA	*643
INDICATED	*275
INFLIGHT	*276
INFORMATION	*996
-ING(suffix)	*948
INNER	*277
INSPECTOR	*785
INTRUDER	*764
IS	*733
IS†	*823
IT	*281
J	51
JANUARY	*282
JULIET	*651
JULY	*283
JUNE	*284
K	52
KEY	*285
KILO	*652
KNOTS	*286
L	53
LAND	*287
LANDING	*288
LATE	*956
LAUNCH	*291
LEAN	*292
LEFT	*770
LEG	*293
LESS THAN	*294
LEVEL	*295
LIGHT	*934
LIMA	*653
LINE	*942

LINK	*998	N	62
LIST	*296	NEAR	*333
LOCK	*297	NEGATIVE	*334
LONG	*298	NET	25
LOOK	*957	NEW	*335
LOW	*771	NEXT	*336
LOWER	*310	NIGHT	*337
LUNCH	*311	NINE	09
		NINE†	*809
M	61	NINETEEN†	*894
MACHINE	84	NO	*342
MAINTAIN	*312	NORTH	*772
MANUAL	*965	NOT	*695
MARCH	*313	NOVEMBER	*662
MARKER	*314	NUMBER	*734
MAY	*315		
MAYDAY	*316	O	63
ME	*920	OBSCURED	*344
MEAN	*317	OCLOCK	*345
MEASURE	*970	OCLOCK†	*824
MEETING	35	OCTOBER	*346
MEGA	*680	OF	*694
MESSAGES	*625	OFF	*614
METER	*620	OH†	*800
MICRO	*931	OHIO	*348
MIKE	*661	OHMS	*933
MILES	*322	OIL	*350
MILL	*971	ON	*613
MILLI	*825	ONE	01
MILLION	*323	ONE†	*801
MINUS	*612	OPEN	94
MINUTES	*645	OPERATION	*352
MIST	*324	OPERATOR	*630
MOBILE	*958	OSCAR	*663
MODERATE	*326	OTHER	*353
MONDAY	*327	OUT	*740
MONTH	*328	OUTER	*355
MORE THAN	*330	OVER	*773
MORNING†	*841	OVERCAST	*356
MOTOR	*972		
MOVE	*973	P	71
MUCH	*332	P.M.	*358
		PAPA	*671

PARTIALLY	*361	RICH	*383
PASS	*774	RIG	*384
PASSED	*974	RIGHT	*665
PATCH	*966	ROAD	*385
PATH	*362	ROGER	*386
PER	*364	ROMEO	*672
PERCENT	*675	ROUTE	*388
PHONE	*914	RUNWAY	*390
PICO	*932		
PLEASE	*967	S	73
PLUS	*611	-S(suffix)	*915
POINT	*674	SAFE	*784
POLICE	*968	SAND	*391
POSITION	*780	SANTA CLARA	*392
POWER	*714	SATURDAY	*393
PRACTICE	85	SCATTERED	*394
PRESS	*781	SECOND	*395
PRESSURE	*935	SECONDS	*635
PRIVATE	*366	SECURITY	*396
PROBE	*975	SELECT	*397
PROGRAMMING	*367	SEPTEMBER	*398
PULL	*980	SEQUENCE	*410
PUSH	*977	SERVICE	*723
		SET	*885
Q	70	SEVEN	07
QUEBEC	*670	SEVEN†	*807
		SEVENTEEN†	*874
R	72	SEVERE	*413
RADIO	*976	SEXY	*414
RAIN	*374	SHORT	*415
RAISE	*375	SHOWERS	*416
RANGE	*981	SHUT	*765
RATE	*376	SIDE	*417
READY	*783	SIERRA	*673
REAR	*377	SIGHT	*418
RECEIVE	*378	SIX	06
RED	*744	SIX†	*806
RELEASE	*381	SIXTEEN†	*864
REMARK	*382	SLEET	*423
REMOTE	*910	SLOPE	*424
REPAIR	*745	SLOW	*983
REPEAT	*982	SMOKE	*795
REPEATER	80	SNOW	*425

SOUTH	*790	TIME	44
SPEED	*984	TIME†	*822
SPRAY	*427	TIMER	*732
SQUAWK	*428	TO	*455
STALL	*431	TODAY	*456
START	*730	TOMORROW	55
STOP	*731	TONIGHT	45
STORM	*433	TOOL	*985
SUNDAY	*434	TORNADO	*457
SWITCH	*725	TOUCHDOWN	*458
SYSTEM	*997	TOWER	*460
		TRAFFIC	*461
T	81	TRANSMIT	*462
TANGO	*681	TRIM	*463
TANK	*435	TUESDAY	*464
TARGET	*436	TURBULANCE	*465
TAXI	*437	TURN	*990
-TEEN(suffix)	14	TWELVE	12
TELEPHONE	*438	TWELVE†	*812
TEMPERATURE	*724	TWENTY	20
TEN	10	TWENTY†	*820
TEN†	*810	TWO	02
TERMINAL	*440	TWO†	*802
TEST	*792	-TY(suffix)	60
-TH(suffix)	*441		
THANK YOU	*978	U	82
THAT	*442	UNDER	*775
THE	24	UNIFORM	*682
THE(long e)	*443	UNIT	*715
THE(short e)	*444	UNLIMITED	*467
THE†	*821	UNTIL	*468
THIR-(prefix)	13 or 30	UP	*650
THIRD	*447	USE(noun)	*470
THIRTEEN	*448	USE(verb)	*471
THIRTEEN†	*813		
THIRTY†	*830	V	83
THIS	*451	VALLEY	*986
THIS IS	65	VALVE	*941
THOUSAND	*644	VARIABLE	*473
THREE	03	VERIFY	*475
THREE†	*803	VICTOR	*683
THUNDERSTORMS	*452	VISIBILITY	*476
THURSDAY	*453	VOLTS	*750

W	91
WAIT	54
WAKE	*477
WAKE UP	*478
WARNING	*480
WATCH	*481
WATTS	*815
WAY	*482
WEATHER	95
WEDNESDAY	*484
WELCOME	*913
WEST	*793
WHISKEY	*691
WILL	*912
WIND	*487
WITH	*490
WRONG	*491
X	92
X-RAY	*692
Y	93
YANKEE	*693
YELLOW	*794
YESTERDAY	*492
YOU	*493
YOUR	*987
Z	90
ZED	*988
ZERO	00
ZONE	*494
ZULU	*690

SOUND EFFECTS

CROWD	*892
EXPLOSION	*891
LASER	*873
PHASER	*882
TIC	*860
TOC	*870
TRAIN	*883
WHISTLE	*881

NUMBERS (MALE)

NUMBER	*734
ZERO	00
OH	63
ONE	01
TWO	02
THREE	03
FOUR	04
FIVE	05
SIX	06
SEVEN	07
EIGHT	08
NINE	09
TEN	10
ELEVEN	11
TWELVE	12
THIRTEEN	*448
THIR-(prefix)	13
-TEEN(suffix)	14
TWENTY	20
FIF-(prefix)	50
HUNDRED	*640
THOUSAND	*644
MILLION	*323
-TY(suffix)	60
FIRST	*225
SECOND	*395
THIRD	*447
FOURTH	*234

NUMBERS (FEMALE)

OH†	*800
ONE†	*801
TWO†	*802
THREE†	*803
FOUR†	*804
FIVE†	*805
SIX†	*806
SEVEN†	*807
EIGHT†	*808
NINE†	*809
TEN†	*810
ELEVEN†	*811

TWELVE†	*812
THIRTEEN†	*813
FOURTEEN†	*814
FIFTEEN†	*854
SIXTEEN†	*864
SEVENTEEN†	*874
EIGHTEEN†	*884
NINETEEN†	*894
TWENTY†	*820
THIRTY†	*830
FORTY†	*840
FIFTY†	*850

DAYS OF THE WEEK

DAYS	*952
SUNDAY	*434
MONDAY	*327
TUESDAY	*464
WEDNESDAY	*484
THURSDAY	*453
FRIDAY	*237
SATURDAY	*393

MONTHS OF YEAR

MONTH	*328
JANUARY	*282
FEBRUARY	*218
MARCH	*313
APRIL	*131
MAY	*315
JUNE	*284
JULY	*283
AUGUST	*135
SEPTEMBER	*398
OCTOBER	*346
NOVEMBER	*662
DECEMBER	*181

COLORS

GREEN	*762
RED	*744
YELLOW	*794

DIRECTIONS

EAST	*754
NORTH	*772
SOUTH	*790
WEST	*793

NAMES

CHARLIE	*623
DEE	31
HENRY	*642
JAY	51
JULIET	*651
KAYE	52
MIKE	*661
OSCAR	*663
PAPA	*671
ROMEO	*672
VICTOR	*683

RUN-TIME VARIABLES

M/A/E	*844
TIME	*872
AM/PM	*832
DATE	*833
DAY OF WEEK	*871

Appendix D

Programming Sheets

Your RC-96 Repeater Controller has been configured using the factory presets shown below. All values can be changed using programming commands. When changing the presets, indicate your new selections and messages in the blank Programming Sheets starting on Page 120.

Factory Presets

Messages

I1	
F1	HI
A1	
P1	
P2	
P3	
S1	
T1	WELCOME TO THE REPEATER
T2	SEVEN-TY THREE
T3	WEATHER ALERT
PH	REPEATER CONTROL
HG	CALL COMPLETE
AL	INTRUDER ALERT
B1	QRU
B2	

Emergency Autodial Numbers

	Message	Phone Number
0	OPERATOR	0
1		
2		
3		
4		
5		
6		
7		
8		
9	NINE ONE ONE	911

Command Code Prefixes

Control Op	123	Reverse Patch	1
UF Logic	9	Patch Utilities	*
Emerg. Autodial	*	Patch Hangup	*
User Autodial	*	Paging	2
Autopatch	*	TT Access	741
Link	7	S-Meter	8
User Autodial L/E	456	Ext. User Autodial	*1
Demo/BB	3	Ext. User Autodial L/E	457
Spare Audio	666	Telephone Timer Ext.	0
		Unlock	1234567890

Misc. Selections

Patch signalling	(TT) DP
Control over receiver	(EC) DC
Phone line share	(PLU) PLS
RC high/low true	RH (RL)
Patch Dialing Prefix	EMPTY

Tone Parameters

Morse Code Speed 15
Morse Code Pitch 880
Cover Tone Pitch 440

Courtesy Tone Selection

CT Logic High STARDUST
Link Tone PIANO CHORD

Timers

Timeout Long 180
Timeout Short 45
Phone Answer 15
Autopatch 180
User Autodial 180
Emergency Autodial 600
Patch Activity 60
Patch Timer Extend 45
Tail Message 300
Touch-Tone Access 900
Hang Time (ms) 4000
Spare Audio 90

Macro Sets 1, 2, 3, 4, and 5

(RE) RD
(TE) TD
(TL) TS
(CA) PC PU PL
ME (MD)
(CE) CD
(TE) TD
(LE) LD
(PE) PD
(LE) LD

(UE) UD
(AU) AL
UU (UH)
(EE) ED
XC (NC)
(PT) PX
TD (TE) TA
(XE) XD
(RO) R1 R2 R3
P1 P2 P3 SP (RP) RS

T1 T2 T3 (TF)
(RE) AD
(SE) SD
(SI) SO
(KE) KD
(TM) TU
(ZD) ZE
(FD) FA
CT 1

UF 1 2 3 4 5 6 7 8
LINK (OFF) RCV XMT FREQ 6.520 S

Custom Configuration

Messages

II _____
FI _____
AI _____
P1 _____
P2 _____
P3 _____
SI _____
T1 _____
T2 _____
T3 _____
PH _____
HG _____
AL _____
B1 _____
B2 _____

Emergency Autodial Numbers

	Message	Phone Number
0		
1		
2		
3		
4		
5		
6		
7		
8		
9		

Command Code Prefixes

Control Op _____
UF Logic _____
Emerg. Autodial _____
User Autodial _____
Autopatch _____
Link _____
User Autodial L/E _____
Demo/BB _____
Spare Audio _____
Reverse Patch _____
Patch Utilities _____
Patch Hangup _____
Paging _____
TT Access _____
S-Meter _____
Ext. User Autodial _____
Ext. User Autodial L/E _____
Telephone Timer Ext. _____
Unlock _____

Tone Parameters

Morse Code Speed _____
Morse Code Pitch _____
Cover Tone Pitch _____

Courtesy Tone Selection

CT Logic High _____
Link Tone _____

Timers

Timeout Long _____
Timeout Short _____
Phone Answer _____
Autopatch _____
User Autodial _____
Emergency Autodial _____
Patch Activity _____
Patch Timer Extend _____
Tail Message _____
Touch-Tone Access _____
Hang Time (ms) _____
Spare Audio _____

Misc. Selections

Patch signalling	TT DP
Control over receiver	EC DC
Phone line share	PLU PLS
RC high/low true	RH RL
Patch Dialing Prefix	_____

User Loadable Autodial Numbers

10 _____	40 _____	70 _____	100 _____	130 _____	165 _____
11 _____	41 _____	71 _____	101 _____	131 _____	166 _____
12 _____	42 _____	72 _____	102 _____	132 _____	167 _____
13 _____	43 _____	73 _____	103 _____	133 _____	168 _____
14 _____	44 _____	74 _____	104 _____	134 _____	169 _____
15 _____	45 _____	75 _____	105 _____	135 _____	170 _____
16 _____	46 _____	76 _____	106 _____	136 _____	171 _____
17 _____	47 _____	77 _____	107 _____	137 _____	172 _____
18 _____	48 _____	78 _____	108 _____	138 _____	173 _____
19 _____	49 _____	79 _____	109 _____	139 _____	174 _____
20 _____	50 _____	80 _____	110 _____	140 _____	175 _____
21 _____	51 _____	81 _____	111 _____	141 _____	176 _____
22 _____	52 _____	82 _____	112 _____	142 _____	177 _____
23 _____	53 _____	83 _____	113 _____	143 _____	178 _____
24 _____	54 _____	84 _____	114 _____	144 _____	179 _____
25 _____	55 _____	85 _____	115 _____	145 _____	180 _____
26 _____	56 _____	86 _____	116 _____	146 _____	181 _____
27 _____	57 _____	87 _____	117 _____	147 _____	182 _____
28 _____	58 _____	88 _____	118 _____	148 _____	183 _____
29 _____	59 _____	89 _____	119 _____	149 _____	184 _____
30 _____	60 _____	90 _____	120 _____	150 _____	185 _____
31 _____	61 _____	91 _____	121 _____	151 _____	186 _____
32 _____	62 _____	92 _____	122 _____	152 _____	187 _____
33 _____	63 _____	93 _____	123 _____	153 _____	188 _____
34 _____	64 _____	94 _____	124 _____	154 _____	189 _____
35 _____	65 _____	95 _____	125 _____	155 _____	190 _____
36 _____	66 _____	96 _____	126 _____	156 _____	191 _____
37 _____	67 _____	97 _____	127 _____	157 _____	192 _____
38 _____	68 _____	98 _____	128 _____	158 _____	193 _____
39 _____	69 _____	99 _____	129 _____	159 _____	194 _____
				160 _____	195 _____
				161 _____	196 _____
				162 _____	197 _____
				163 _____	198 _____
				164 _____	199 _____

Macro Set 1

RE RD	UE UD	T1 T2 T3 TF
TE TD	AU AL	RE AD
TL TS	UU UH	SE SD
CA PC PU PL	EE ED	SI SO
ME MD	NC XC NR	KE KD
CE CD	PT PX	TM TU
TE TD	TD TE TA	ZD ZE
LE LD	XE XD	FD FA
PE PD	R0 R1 R2 R3	CT ___
LE LD	P1 P2 P3 SP RP RS	

UF 1 2 3 4 5 6 7 8
LINK OFF RCV XMT FREQ _____

Macro Set 2

RE RD	UE UD	T1 T2 T3 TF
TE TD	AU AL	RE AD
TL TS	UU UH	SE SD
CA PC PU PL	EE ED	SI SO
ME MD	NC XC NR	KE KD
CE CD	PT PX	TM TU
TE TD	TD TE TA	ZD ZE
LE LD	XE XD	FD FA
PE PD	R0 R1 R2 R3	CT ___
LE LD	P1 P2 P3 SP RP RS	

UF 1 2 3 4 5 6 7 8
LINK OFF RCV XMT FREQ _____

Macro Set 3

RE RD	UE UD	T1 T2 T3 TF
TE TD	AU AL	RE AD
TL TS	UU UH	SE SD
CA PC PU PL	EE ED	SI SO
ME MD	NC XC NR	KE KD
CE CD	PT PX	TM TU
TE TD	TD TE TA	ZD ZE
LE LD	XE XD	FD FA
PE PD	R0 R1 R2 R3	CT ___
LE LD	P1 P2 P3 SP RP RS	

UF 1 2 3 4 5 6 7 8
LINK OFF RCV XMT FREQ _____

Macro Set 4

RE RD	UE UD	T1 T2 T3 TF
TE TD	AU AL	RE AD
TL TS	UU UH	SE SD
CA PC PU PL	EE ED	SI SO
ME MD	NC XC NR	KE KD
CE CD	PT PX	TM TU
TE TD	TD TE TA	ZD ZE
LE LD	XE XD	FD FA
PE PD	R0 R1 R2 R3	CT ___
LE LD	P1 P2 P3 SP RP RS	

UF 1 2 3 4 5 6 7 8
LINK OFF RCV XMT FREQ _____

Macro Set 5

RE RD	UE UD	T1 T2 T3 TF
TE TD	AU AL	RE AD
TL TS	UU UH	SE SD
CA PC PU PL	EE ED	SI SO
ME MD	XC NC	KE KD
CE CD	PT PX	TM TU
TE TD	TD TE TA	ZD ZE
LE LD	XE XD	FD FA
PE PD	R0 R1 R2 R3	CT ___
LE LD	P1 P2 P3 SP RP RS	

UF 1 2 3 4 5 6 7 8
LINK OFF RCV XMT FREQ _____

Appendix E

Messages

This appendix lists all sounds—tones, Morse code letters, and synthesized voice—that you may hear from the RC-96 as it comes from the factory (except for responses to Control Operator commands). Of course, you can add or modify a wide range of tones, pitches, and messages on your own, but this list should help you orient yourself to what is already present.

Tones are listed first, followed by Morse code messages and "voice" messages that begin with variable information. Finally, all fixed and preset (that is, programmer-changeable) messages are listed alphabetically.

Explanations include the names of associated commands and chapter references, where applicable. Programmable messages and tones are shown in Appendix D.

Tones

(patch cover tone)

This tone (Morse code "T") has been preset to 440Hz (A above middle C, the orchestral tuning pitch). The programmer can change this tone (Chapter 6).

(touch tone cover tone)

This tone (Morse code "T") is heard when Touch-Tones are being sent through the main repeater receiver. The cover tone is intended to mute the sent Touch Tones, and to let other users know that someone is using the channel.

Beep

This is the preset response tone to indicate that the selected User Function is on or has been turned on with the current command (Chapter 4). The programmer can invert the output logic sense (Chapter 6).

Boop

This is the preset response tone to indicate that the selected User Function is off or has been turned off with the current command (Chapter 4). The programmer can invert the output logic sense (Chapter 6).

Bumblebee

This is the logic low courtesy tone that the user hears when he has unkeyed his transmitter, and that the RC-96 installer should expect to hear when the repeater receiver is first hooked up. The Control Operator can change the tone selection (Chapter 5).

Piano Chord

This is the preset tone applied to signals received through a remote base, to distinguish them from those on the repeater frequency. The programmer can change the Link Courtesy Tone (Chapter 6).

Stardust

This is the preset tone to indicate a logic high at the Courtesy Tone Select logic input. The programmer can change this tone (Chapter 6).

Warning warble

This tone is heard over the repeater when the Activity Timer has timed out during an Autopatch because the user has made too long a transmission (or has a stuck transmitter key), or has listened too long without making a transmission (or has moved out of range). The user can reset the timer by sending a brief transmission.

Morse Code

.... .. (HI; preset FI message)

This is the preset value of the Forced CW ID message. The FI message is also transmitted in response to the programmer's Morse Code Speed, Morse Code Pitch and Cover Tone Pitch commands (Chapter 6), and the user's Touch-Tone Access Mode Down command (Chapter 4).

.. (I)

The user has answered a reverse patch while it was ringing, has unkeyed, and hears this acknowledgement of connection from the controller (Chapter 4).

Synthesized-voice Messages

(band name) off

The user has entered the Link Off command (band name if FC-900 mode) (Chapter 4).

(band name) receive

The user has entered the Link On Receive Only command (band name if FC-900 mode) with frequency 0.000 (Chapter 4).

(band name) transmit

The user has entered the Link On Receive/Transmit command (band name if FC-900 mode) (Chapter 4).

(frequency)	The user has entered the Link On Receive Only command (band name if FC-900 mode) with nonzero frequency values (Chapter 4).
Autodial cancel	The user has erased an Autodial location using the User Autodial Load/Erase command (Chapter 4).
Autodial write	The user has assigned an Autodial number using the User Autodial Load/Erase command (Chapter 4).
Autodial xx	The user has brought up the User Loadable Autodialer (Chapter 4).
Autopatch	The user has brought up the Autopatch (Chapter 4).
Busy	The user has entered an Autodial, Emergency Autodial, Autopatch or Patch Redial command, but the phone line is in use by another controller (Chapter 4).
C	The user has entered the Patch Cover Tone command (Chapter 4).
Call complete [preset Phone Hangup message]	Theuser has hung up the patch (Chapter 4). The programmer can change this message (Chapter 6).
D	The user has entered the Full Duplex command (Chapter 4).
E R write	The programmer has entered a Programming command, but there was a hardware failure in writing to the E²PROM. Contact the factory to help determine the nature of the failure.
Intruder alert [preset Site Alarm message]	The site alarm has been activated. The programmer can change this message (Chapter 6).
L-O-C-K	The programmer has entered # to lock the RC-96, or the one-minute lock timer has timed out, exiting the Programming mode.
Nine one one [preset Emergency Autodial 9 message]	The user has brought up the Emergency Autodialer location 9. The programmer can change this message and its accompanying phone number (Chapter 6).
Off	The user has entered the Link Off command in BCD mode (Chapter 4).
Operator [preset Emergency Autodial 0 message]	The user has brought up the Emergency Autodialer location 0. The programmer can change this message and its accompanying phone number (Chapter 6).
P-L	The user has turned Encode CTCSS on or off in FC-900 mode.

P-A-G-E	The user has entered a Two-Tone Paging command from a phone, and the controller acknowledges with this message, then waits for a break in a conversation over the air before sending the tones (Chapter 4).
Patch cancel	The user has entered a patch Custom Hangup Code. A call must be placed within 15 seconds after defining the Custom Hangup Code, otherwise the hangup code reverts to the value defined by the programmer.
Please wait	The user has entered a pager code from the phone, and the controller is waiting for a break in a conversation over the air before sending the paging tones (Chapter 4).
Q-R-U [preset Bulletin Board #1 message]	The user has played Bulletin Board #1 message (Chapter 4). The programmer can change this message (Chapter 6).
RC-96 Repeater Controller V x	This is the message (including version number "x") the controller gives when its power switch is first turned on, or after a front panel or Control Op command Reset.
Ready	The user has entered a pager code, and the controller has sent the tones stored in the corresponding memory location (Chapter 4). The user can start talking out to the pager.
Receive	The user has entered the Link On Receive Only command in BCD mode, and all frequency digits are zero (Chapter 4).
Repeat dial	The user has entered the Patch Redial command (Chapter 4).
Repeater control [preset Phone Answer message]	A caller into the repeater will hear this message when the controller answers the phone. The programmer can change this message (Chapter 6).
Repeater time out	The user didn't wait for the courtesy tone, or talked too long, and the total transmission time between timer resets exceeded the programmable timeout timer value.
Repeater time out cancel	After a Repeater Time Out, the signal at the controller input went away for at least 650 ms, and the transmitter is then re-enabled.
Sx **Sx plus xx**	The user has entered the S-Meter Command (Chapter 4). The talking S-meter reading is in S-units up to S9, or in S-units plus xx decibels past S9.
Seventy-three [preset Tail Message #2 message]	The users allowed the repeater carrier to drop and Tail Message #2 was played. The programmer can change this message (Chapter 6).

Sierra	The user has entered the Touch-Tone Pad Test command, and the controller is reading back all occurrences of the star key (*) as "Sierra."
Switching to (band name)	The user has entered a Link/Remote Base command in FC-900 mode, causing the controller to swap the main and subband units (Chapter 4).
Thirty seconds left	The Autopatch timer has timed out; the user needs to enter the Patch Timer Extend command within 30 seconds to continue uninterrupted (Chapter 4).
This is the Advanced Computer Controls RC-96 Repeater Controller V x.	The user has entered the demo prefix plus * to call for the firmware revision announcement (Chapter 4).
Timer X	The user has entered the Timer Extend command during a patch, and the controller is reloading the timer with the value defined by the programmer (Chapter 4).
Transmit	The user has entered the Link On Receive/Transmit command in BCD mode (Chapter 4).
Two minutes left	The user has entered the Telephone Timer Extend command (Chapter 4).
U-L	This response occurs when the programmer has unlocked the RC-96 in preparation for entry of programmer commands, or when the controller has stored a valid command and is awaiting the next (Chapter 6).
U-L P-G-M	This response occurs when the programmer moves back-panel DIP switch 8 to the up (ON) position and enters a new 10-digit Unlock Code.
Up	The user has entered the Touch-Tone Access Up command (Chapter 4).
Weather alert [preset Tail Message #3 message]	The programmer can change this message (Chapter 6).
Welcome to the repeater [preset Tail Message #1]	The programmer can change this message (Chapter 6).
Write, U-L	The programmer has successfully entered a Programming command (Chapter 6).

Appendix F

Hardware Connections and Adjustments

Figure F-1. RC-96 Front Panel

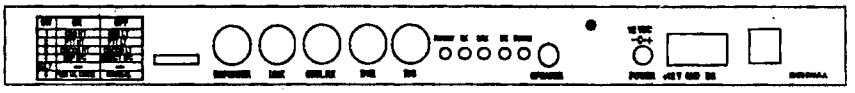

Figure F-2. RC-96 Rear Panel

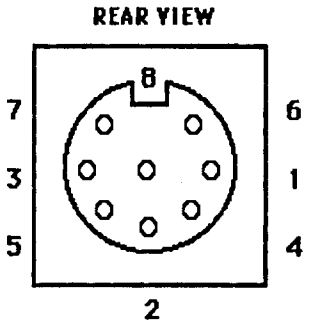

Figure F-3. Eight-pin DIN Connector Pinout

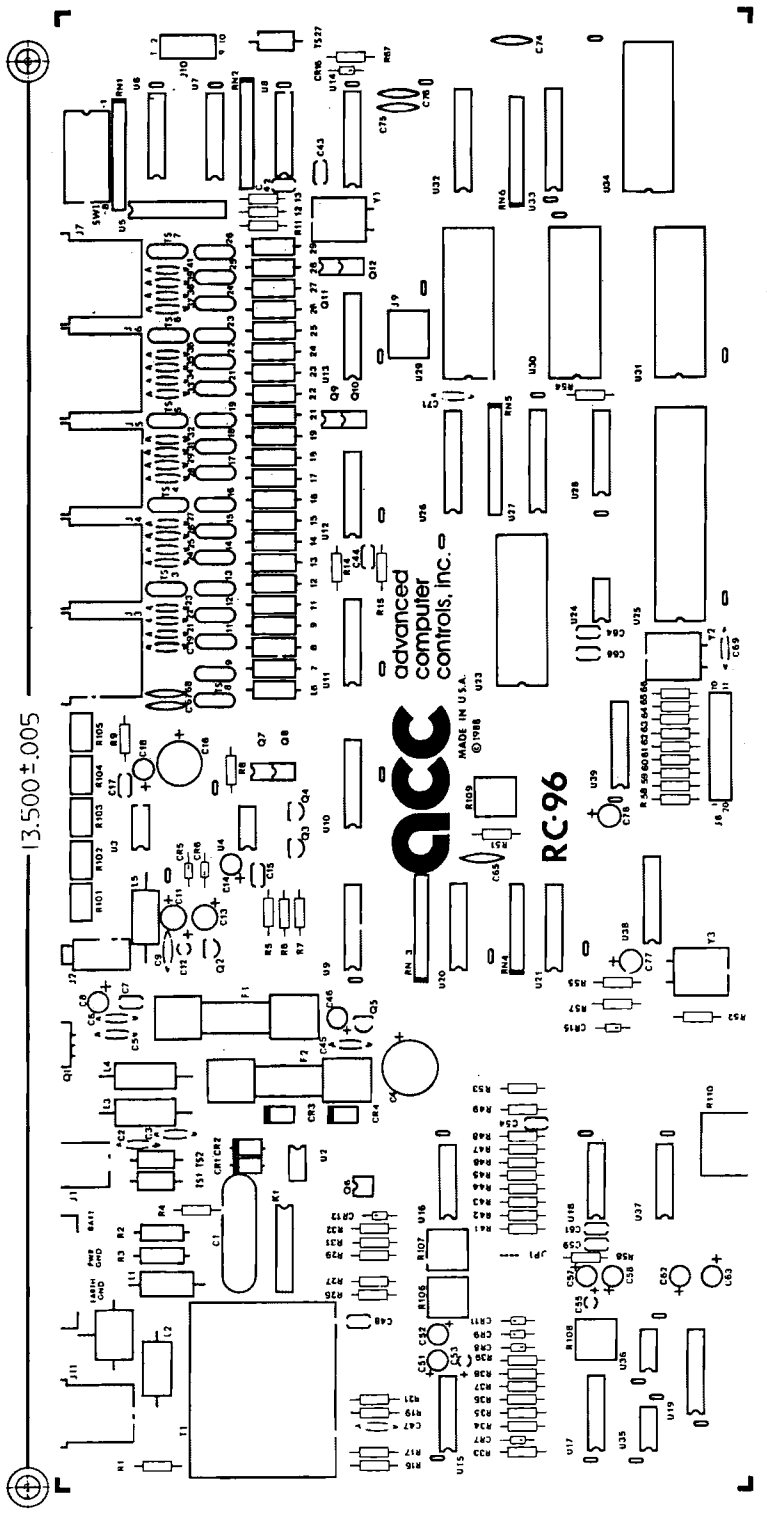

Figure F-4. RC-96 PC Board Parts Locations

Item	Loc	Label	Purpose	Ch	Section
Button	front	RESET	Hardware (= CtrlOp) reset	5	Initialize Cmd
DIP SW	rear	(table)	Select hardware settings	F	Table F-2
F1	board	F1	Power jack fuse, 1 amp	—	
F2	board	F2	Terminal strip fuse, 1 amp	—	
J1	rear	POWER	Power jack	2	+12 V Power
J2	rear	SPEAKER	Speaker jack, 8 ohms	2	Trying It Out
J3	rear	R/C	Remote control connector	7	Courtesy Tone
				8	Site Alarm, R/C Outputs, Expanded R/C Outputs, Shared Phone
J4	rear	DVR	Digital Voice Recorder	8	DVR, Ext Tape Player
J5	rear	CNTL RX	Control Receiver conn	8	Control Receiver
J6	rear	LINK	Link / Remote Base conn	8	R/C Outputs, Exp R/C Out, Link/Rem Base, Spare Audio
J7-11	rear		Various connections	F	Tables F-3 to F-5
J7	rear	REPEATER	Repeater connector	2	(throughout)
J8	board	J8	(front panel ribbon cable)	—	
J9	board	J9	Audio Delay Board conn	H	AD-2 Board
J10	board	J10	CTCSS Tone Panel conn	I	CTCSS TNP
J11	rear	(none)	Modular telephone jack	2	Telephone Line
JP1	board	JP1	Jumper, RX audio level	2	Receiver Audio
Knob	front	VOLUME	Ext speaker volume control	2	Trying It Out
LED	front	POWER	Power present	2	Trying It Out
LED	front	COS	Signal present at receiver	—	
LED	front	CTCSS	Tone present at receiver	—	
LED	front	PTT	Repeater transmitting	—	
LED	front	LCOS	Signal present at link rcvr	—	
LED	front	LPTT	Link transmitter transmitting	—	
LED	front	PHONE	Phone is off-hook	—	
LED	front	DTMF	Decoding DTMF, any source	2	Trying It Out
LED	front	PGM	Controller unlocked	6	Unlocking and Locking
R101	rear	PHONE	Telephone level	2	Setting Audio Levels
R102	rear	RX	Receiver level	2	Setting Audio Levels
R103	rear	LRX	Link receiver level	2	Setting Audio Levels
R104	rear	TX	Transmitter level	2	Setting Audio Levels

R105	rear	PH DRV	Phone line drive level	2	Setting Audio Levels
R106	board	R106	Speech synthesizer level	2	Setting Audio Levels
R107	board	R107	Tone level	2	Setting Audio Levels
R108	board	R108	Hybrid balance	—	
R109	board	R109	Speech pitch	—	
R110	front	R110	Speaker volume	2	Trying It Out
	rear	+12V	Term conn, +12 volts	2	Power
	rear	GND	Term conn, power ground	2	Power
	rear	E G	Term conn, earth ground	2	Telephone Line

Table F-1. List of Connections and Adjustments

Switch	Description	ON	OFF	Default
1	Repeater Receiver COS	High true	Low true	ON
2	Repeater Transmit PTT	High true	Low true	OFF
3	Control Receiver COS	High true	Low true	ON
4	Remote Control Mode	Expanded / BCD/FC-900	Direct	ON
5	Not used			OFF
6	Not used			OFF
7	Remote Base Select	FC-900	BCD	OFF
8	Unlock Command Define	Define code	Normal	OFF

Table F-2. DIP Switch Descriptions

		J7	J6	J5	J4	J3
Color	Pin	REPEATER	LINK	CNTL RX	DVR	R/C
Black	1	COS	COSL	COS CR	TX Aud Mix In	Alarm
Brown	2	AG	AG	AG	AG	AG
Red	3	SMET	CX1	-	RX Audio	CX1
Orange	4	PTT	PTTL	-	Serial Data	CX3
Yellow	5	CTCSS IN	CX2	-	Phone Out	CX2
Green	6	TX Audio	TX Audio	-	Ph Spare In	Phone Busy
Blue	7	RX Audio	Link RX Aud	CR RX Audio	(Ext Dev) Busy	CT Sel
White	8	CTCSS OUT	DG	DG	COS	DG
Tin	shield	DG	DG	DG	DG	DG

Table F-3. DIN Connector Pinouts

Device	Rptr Pin #	Link Pin #	Cntl Rx Pin #	DVR Pin #	R/C Pin #
Repeater (basic)	1,7 (Rx); 4,6 (Tx)				
CTCSS Decoder	5 (in)				
Talking S-Meter	3 (in)				
Control Receiver			1, 7 (in)		
Site Alarm					1 (in)
R/C Outputs		3, 5 (out)	– or –		3, 4, 5 (out)
Exp R/C Outputs		3, 5 (out)	– or –		3, 4, 5 (out)
Link/Remote Base					
Fixed Freq		1, 7 (in); 4 , 6 (out)			
BCD		add 3, 5 (out)			
FC-900		all (cable)			
Spare Audio Src		7 (in)			
Ext Tape Player		5 (out)		1, 7 (in)	5 (out)
Dig Voice Rec				all	
Shared Ph Line					4(out);6(in)

Table F-4. Interface/Connector Cross-reference

Connec/Pin	Name	Purpose
REPEATER		[for special interface information, refer to Ch 2]
1	COS	COS input; DIP #1 selects logic sense
2	AG	Analog Ground; tied to DG at power connector
3	SMET	S-Meter input voltage, 0 - 5 V –> S0 to S9 + 60
4	PTT	PTT output; DIP #2 selects logic sense
5	CTCSS	CTCSS input; high true logic or CTCSS tone with Tone Panel Option
6	TX Audio	Transmit Audio output; adjustments Chapter 2
7	RX Audio	Receive Audio input; adjustments Chapter 2
8	CTCSS ENC OUT	CTCSS output;
SH	DG	Digital Ground; tied to AG at power connector
LINK		
1	COSL	Link/Remote Base COS input; high true
2	AG	Analog Ground; tied to DG at power connector
3	CX1	UF1 or serial data output
4	PTTL	Link/Remote Base PTT output; low true
5	CX2	UF2 or serial data output
6	TX Audio	Transmit Audio output (same as REPEATER 6)
7	Link RX Audio	Link/Remote Base Receive Audio input
8, SH	DG	Digital Ground; tied to AG at power connector

CNTL RX		
1	COS CR	Control Receiver COS input; DIP #3 selects logic sense
2	AG	Analog Ground; tied to DG at power connector
3	—	
4	—	
5	—	
6	—	
7	CR RX Audio	Control Receiver Audio input
8, SH	DG	Digital Ground; tied to AG at power connector
DVR		
1	TX Audio Mixer In	Can be level-adjusted in the DVR; to DVR Ch 1 Output; also used with external tape players
2	AG	Analog Ground; tied to DG at power connector
3	RX Audio	Receive Audio output; to DVR Ch 1 Input
4	Serial Data	CX1; to DVR Ch 1 and Ch 2 Serial Data Input
5	Phone Out	To DVR Ch 2 Input
6	Phone Spare In	To DVR Ch 2 Output
7	Busy	External Device Busy input from DVR, to Ch 1 Busy output; also used with external tape players
8	COS	COS output; to DVR Ch 1 COS Input
SH	DG	Digital Ground; tied to AG at power connector
R/C		
1	Alarm	Site Alarm input; active high
2	AG	Analog Ground; tied to DG at power connector
3, 4, 5	CX1, CX3, CX2	DIP #4 off: User Function logic outputs, sense invertible by programmer; DIP #4 on: serial output
3	CX1	UF 1 or serial data output
4	CX3	UF 3; in Phone Line Shared mode, active-low
5	CX2	UF 2 or serial clock output; with DIP #4 off and message loaded, provides 1-sec external tape player start pulse
6	Ph. Busy	Phone Busy input
7	CT Sel	Courtesy Tone Select input; logic low tone set by Control Op command; logic high tone set by Programmer command
8, SH	DG	Digital Ground; tied to AG at power connector

Table F-5. Connector Pin Functional Descriptions

Appendix G

Schematic

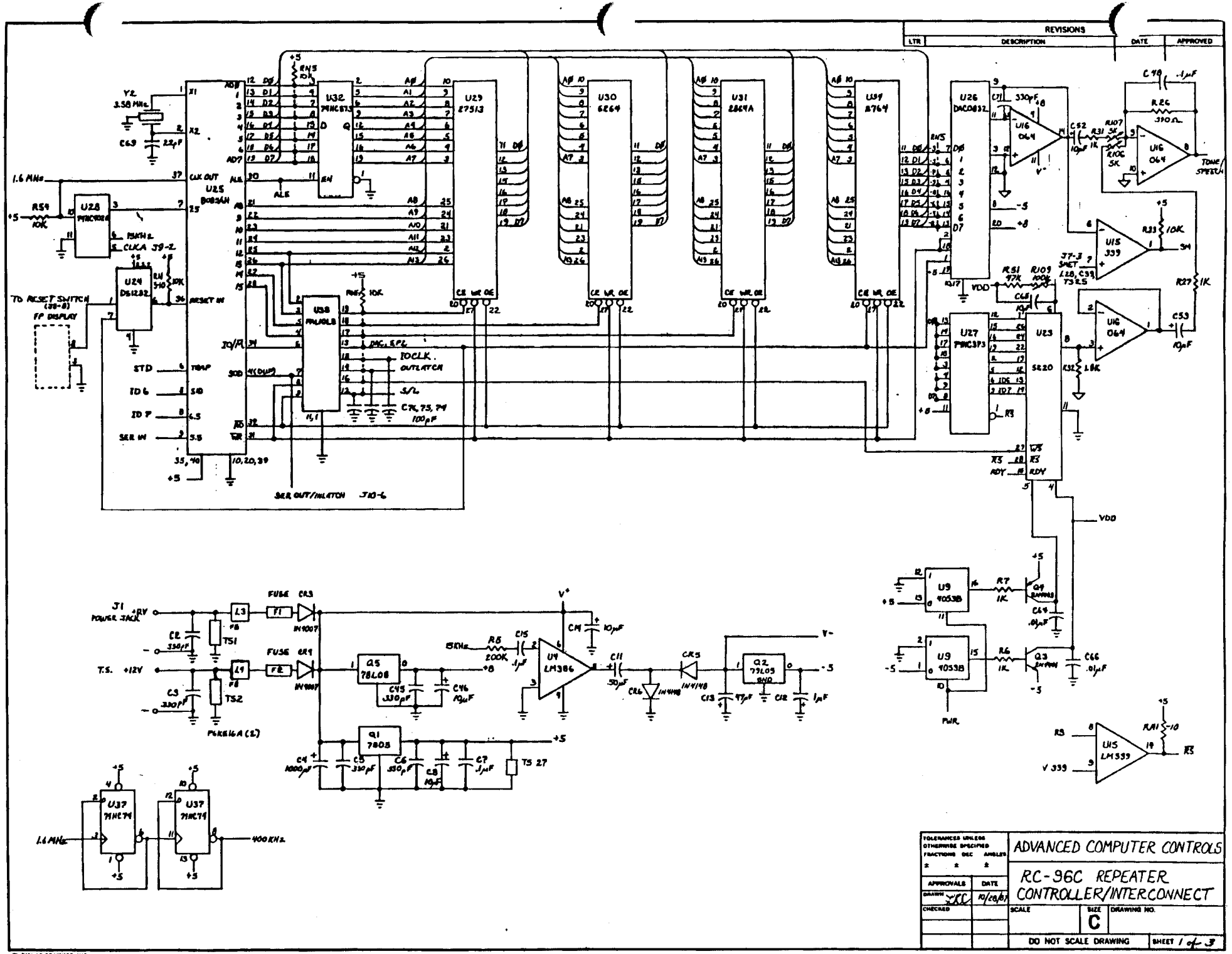
REVISIONS
LTR
DESCRIPTION
DATE
APPROVED
Y2
3.58 MHz
C69
22pF
1.6 MHz
CLK OUT
U25
80B34H
RESET IN
U28
74HC00
CLK A 39-2
R59
10K
U24
DS1232
TO RESET SWITCH (38-8)
FP DISPLAY
STD
ID 6
ID 7
SER IN
TRAP
SID
SOD
IO/M
RD
WR
35, 40
10, 20, 39
SER OUT/INFLATION 310-6
U32
74HC373
U29
27513
U30
6264
U31
2864A
U34
8764
RN5
10K
ALE
U38
74LS08
IOCLK
OUTLATCH
S/L
CR7, 75, 74
100pF
U26
DAC0832
U16
O64
C71
330pF
C52
10pF
R31
1K
R107
5K
R106
5K
C70
.1μF
R26
390Ω
TONE SPEECH
U15
339
R33
10K
R27
1K
C53
10pF
37-3 SHEET 128, C39 73 2.5
R51
47K
R109
100K
C65
VDD
U27
74HC373
U23
SE20
R32
1.8K
R3
RDY
VDD
J1
POWER JACK
+12V
T.S.
FUSE CR3
FUSE CR1
IN4007
L3
L4
FB
TS1
TS2
C2
330pF
C3
330pF
PARELLA (2)
Q5
78L08
C45
330pF
C46
10μF
Q1
7808
C4
1000μF
C5
330pF
C6
330pF
C8
10μF
C7
.1μF
TS 27
+5
V+
V-
-5
+8
U4
LM386
C14
10μF
R8
200K
C15
.1μF
150KHz
C11
50μF
CR5
IN4148
CR6
IN4148
Q2
79L05
C13
47μF
C12
1μF
U9
4053B
R7
1K
R6
1K
Q4
Q3
C64
.01μF
C66
.01μF
PWR
U37
74HC74
1.6 MHz
400 KHz
U15
LM339
R11
10
V 339
ADVANCED COMPUTER CONTROLS
RC-96C REPEATER CONTROLLER/INTERCONNECT
TOLERANCES UNLESS OTHERWISE SPECIFIED
FRACTIONS DEC ANGLES
APPROVALS
DATE
DRAWN
10/20/87
CHECKED
SCALE
SIZE
C
DRAWING NO.
DO NOT SCALE DRAWING
SHEET 1 of 3
BISHOP GRAPHICS, INC.

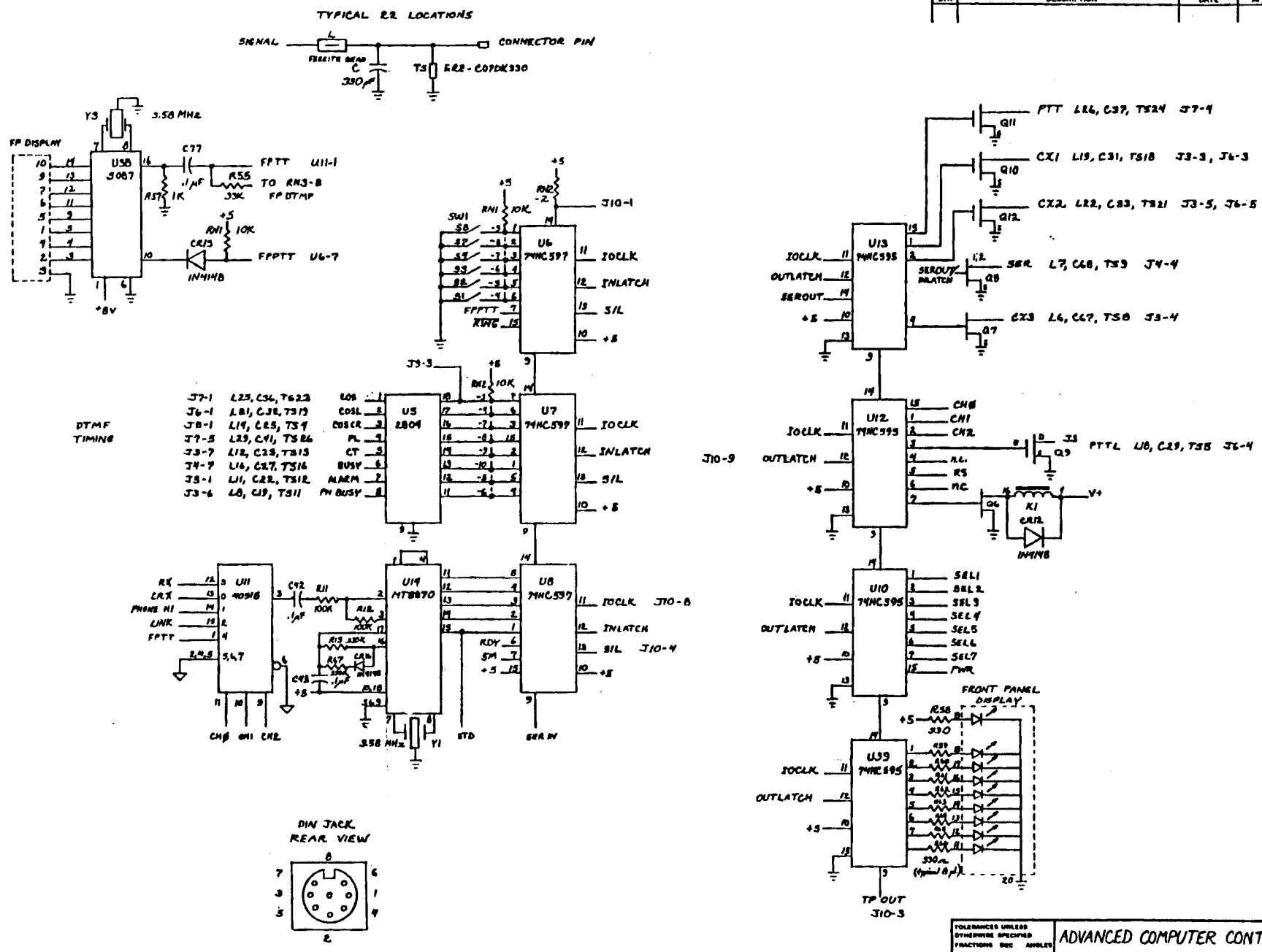

REVISIONS			
LTR	DESCRIPTION	DATE	APPROVED

TOLERANCES UNLESS OTHERWISE SPECIFIED FRACTIONS ± DEC ± ANGLES ±	ADVANCED COMPUTER CONTROLS
APPROVALS / DATE	RC-96 REPEATER CONTROLLER/INTERCONNECT
DRAWN: DRC 10/30/97	
CHECKED	SCALE / SIZE C / DRAWING NO.
	DO NOT SCALE DRAWING / SHEET 2 of 3

BISHOP GRAPHICS INC

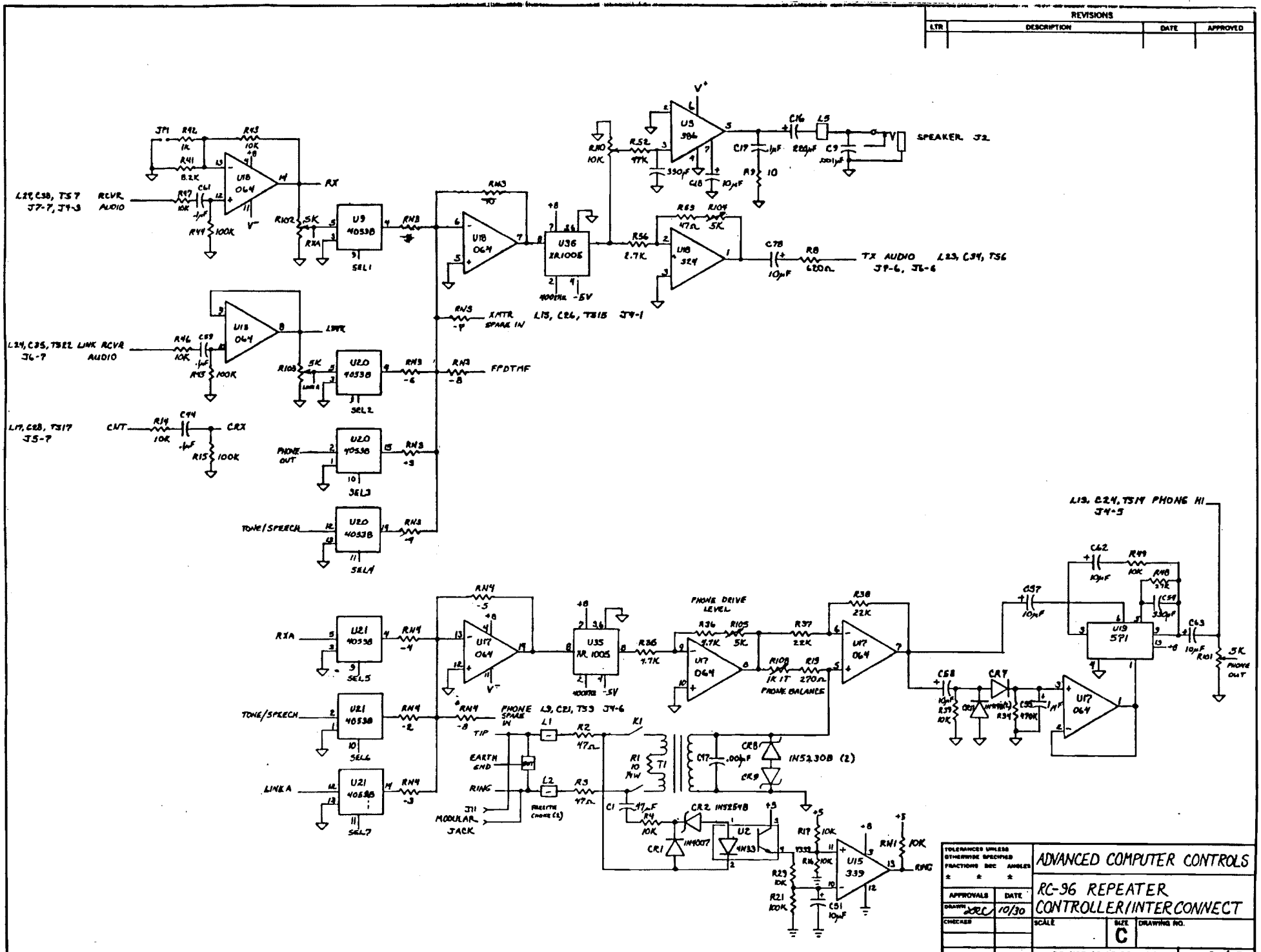
REVISIONS
LTR
DESCRIPTION
DATE
APPROVED
SPEAKER J2
TX AUDIO
L23, C34, TS6
J9-6, J6-6
L15, C26, TS15 J4-1
XMTR SPARE IN
FPDTMF
RCVR AUDIO
L29, C38, TS7
J7-7, J4-3
L24, C35, TS22 LINK RCVR AUDIO
J6-7
L17, C28, TS17
J5-7
CNT
CRX
PHONE OUT
TONE/SPEECH
RXA
LINK A
L13, C24, TS14 PHONE HI
J4-5
PHONE DRIVE LEVEL
PHONE BALANCE
PHONE SPARE IN
L9, C21, TS3 J4-6
TIP
EARTH GND
RING
J11
MODULAR JACK
1N5230B (2)
1N4007
1N5254B
1N4007
4N33
RING
TOLERANCES UNLESS OTHERWISE SPECIFIED
FRACTIONS DEC ANGLES
APPROVALS
DATE
DRAWN
10/30
CHECKED
ADVANCED COMPUTER CONTROLS
RC-96 REPEATER
CONTROLLER/INTERCONNECT
SCALE
SIZE
C
DRAWING NO.
DO NOT SCALE DRAWING
SHEET 3 of 3
BISHOP GRAPHICS, INC.
REORDER NO. 20672

Appendix H

AD-2 Audio Delay Board

Description

The AD-2 audio delay board delays the repeater receiver audio by 75 ms before reaching the repeater (and remote base) transmitter. The delay gives the '96 audio circuitry an opportunity to fully mute Touch-Tone (instead of passing "blips") and to fully mute squelch tails less than 75 ms in duration.

The benefit of squelch tail muting is pleasant listening – no crash, chunk, or click is heard at the end of users' transmissions – just the courtesy tone. Touch-Tone blip muting has a variety of benefits, including pleasant listening, improved security, and elimination of sending tone blips through the remote base transmitter which could affect the linked repeater's control system.

The 75 ms delay is long enough to mute squelch tails in most receivers. Those receivers designed for a longer squelch tail may be modified in many cases by reducing a capacitor in the squelch circuit to reduce the tail duration.

Installation of the AD-2 board preserves the outstanding audio characteristics of the '96. Although low pass filtering is required on the board because of the sampled data nature of the delay line, flat frequency response is maintained to nearly 6 kHz.

The AD-2 board mounts in an existing IC socket on the '96 board. Three additional signals are picked up by the J-9 connector. These three wires are connectorized on the AD-2 board for easy removal if necessary.

Installation

The board is supplied with mounting hardware for the '96. In addition, two Molex connectors and wire are supplied for connections to J-9 on the '96.

1. Cut the supplied wires to the following lengths. Strip about 1/8" insulation from one end, and about 1/4" insulation from the other end of each wire and tin each end.

orange – 10.25" green – 10.25" red – 10.25 "

2. Crimp a Molex pin on both ends (the 1/4" stripped end) of each wire.

3. Install the Molex pins in the two white connector housings. Be sure that when the Molex connector plugs into the mating connector on the AD-2 board, the wires go to the pin labeled on the board as follows:

orange – pin 1 green – pin 2 red – pin 3

Be sure that when the Molex connector plugs into J-9, the wires, from left to right, are as follows:

red – pin 1 orange – pin 2 green– pin 3

4. Power down the RC-96 repeater controller.

5. Remove IC U9 (4053B) from the RC-96 board, and plug it into U5 of the AD-2 board. Be sure to plug it in so that pin 1 is oriented properly.

6. If your repeater receiver's COS signal is *low true*, remove the jumper at JU1.

7. Plug the 16 pin DIP plug on the bottom of the AD-2 board into a single 16 pin socket as a spacer. (Three 16 pin sockets will be left over.) Unscrew the 4-40 screw near the center of the board next to U23. Screw in the short standoff extender (see the assembly drawing on the following page). Mount the two short plastic spacers in the holes on the two diagonal corners of the AD-2 board using 4-40 screws. These will serve as supporting feet. Be sure that the socket spacer pins are straight, then carefully plug the AD-2 board into socket U9 on the RC-96 board. Screw a 4-40 screw into the standoff extender.

Adjustments

No adjustments to R12 and R13 on the AD-2 board should be necessary. The pots set the DC bias and null point for the MN3005 chip.

If there is audio clipping, chances are that level coming into the board is too high. Back off R102 on the '96 board. Only if there is asymmetrical clipping should the R12 pot be adjusted, *and then only using an oscilloscope.* Adjust pot R12 so that very high level audio clips symetrically at pin 8 of U2.

Pot R13 adjusts the output balance to null the clock component in the delayed audio. It may be adjusted for minimum clock component in the audio at U2 pin 8.

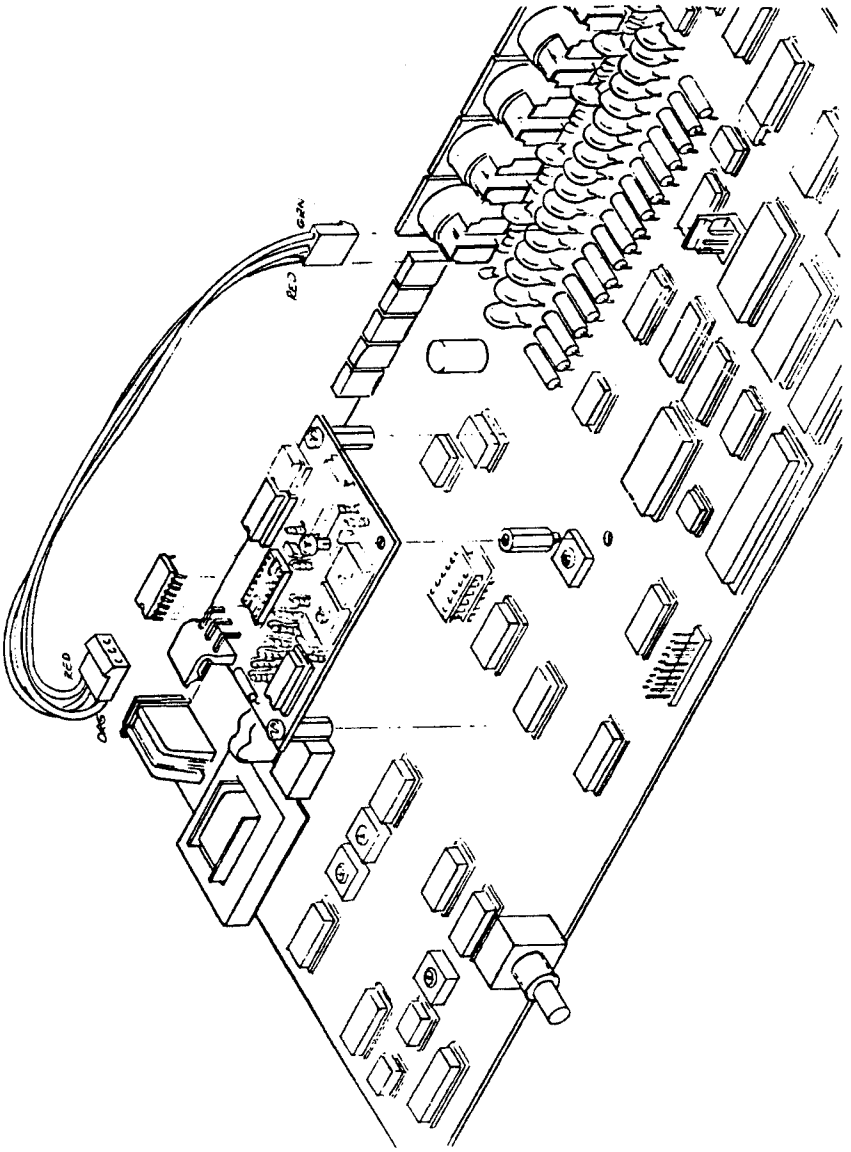

REVISIONS			
LTR	DESCRIPTION	DATE	APPROVED

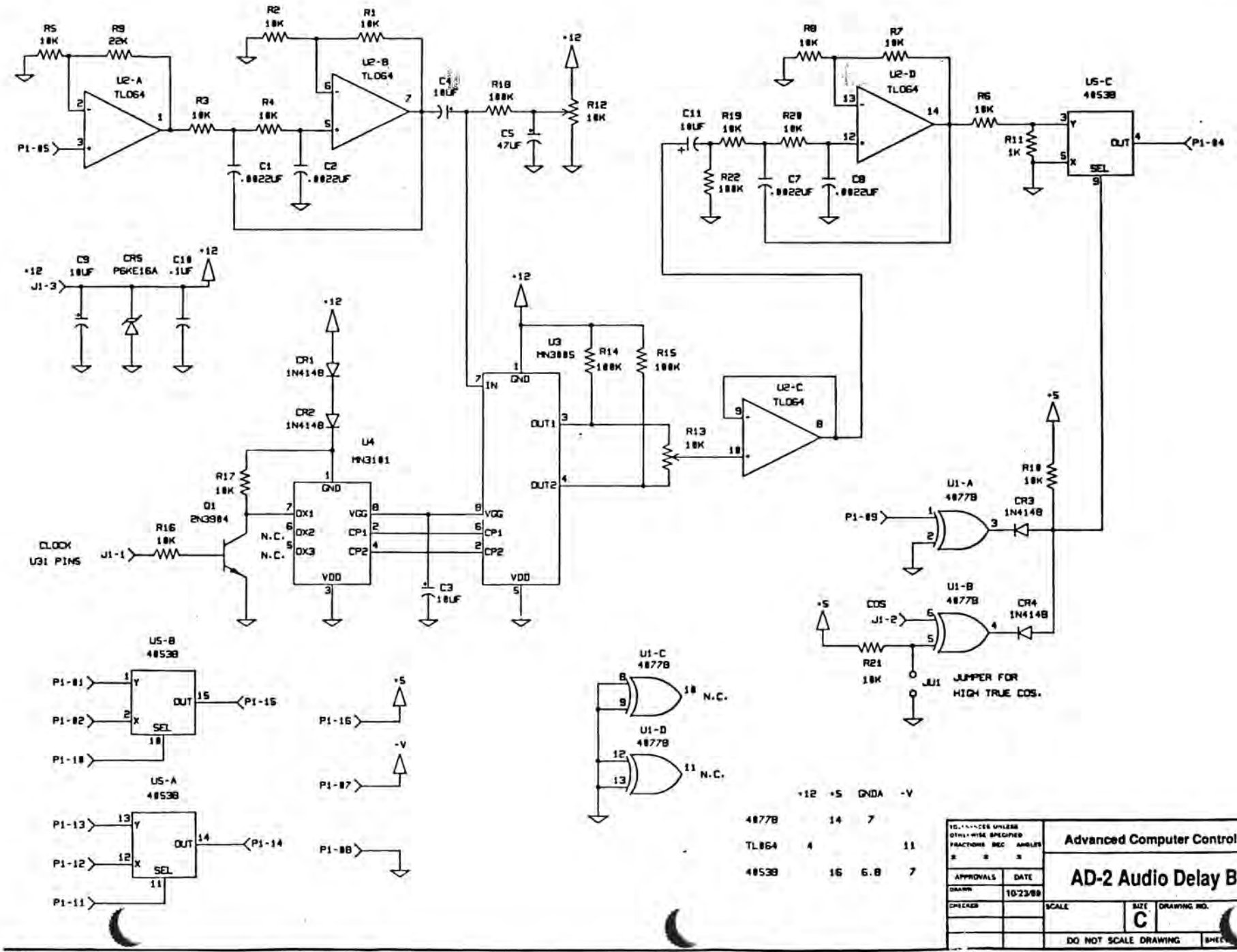

	+12	+5	GNDA	-V
4077B		14	7	
TL064	4			11
40538		16	6.8	7

APPROVALS	DATE
DRAWN	10/23/89
CHECKED	

Advanced Computer Controls, Inc.

AD-2 Audio Delay Board

SCALE | SIZE C | DRAWING NO.

DO NOT SCALE DRAWING

Appendix I

CTCSS Tone Panel

Introduction

The Tone Panel option provides one remotely programmable CTCSS encode and up to eight programmable CTCSS decode frequencies. The board is supplied standard with provisions for one tone (encode *or* decode) and can accommodate up to seven additional decode tones by adding chips.

The '96 controller provides Control Op selectable CTCSS modes, requiring tone encoding on signals to access the repeater or to access different levels of commands (see Chapter 5 – Access / Control Commands). With the tone panel, the repeater can recognize one or more programmable tone frequencies. Each tone can be enabled or disabled independently with Control Op commands, and the enable/disable status of each tone is stored in macro sets.

Tone #1 can be selected for decode *or* encode. If selected for encode, the programmed tone signal is available for injection into the repeater transmitter. Tones #2-8 are decode only.

Installation

The Tone Panel board installs easily into the RC-96 controller, with the four provided #4-40 screws and a 10-pin ribbon cable connecting J10 on the main board to J1 on the Tone Panel board. Of course, install the board with power off !

CTCSS tone from the receiver discriminator should be applied to Pin 5 of the REPEATER DIN connector. Lift Pin 4 of integrated circuit U5 on the large controller board (ULN2804A) to eliminate loading on your CTCSS signal by the logic IC input. Pull out U5 and bend the lead up, or cut it off, so that it does not make contact to the socket pin. (This is necessary because this

connector signal input may instead be used for a CTCSS *logic* signal if an external decoder, such as a TS-32, is used in place of the Tone Panel option.)

Encoded CTCSS tone output is available at the REPEATER DIN connector, Pin 8. The encode level is adjustable with pot R101 on the tone board. If CTCSS is expected to be present on user's signals, the receiver audio should be high-pass filtered externally before being applied to the controller's receiver audio input, or receiver audio should be taken from a point in the receiver where CTCSS has been filtered out. This will prevent repeated CTCSS from interfering with the internally generated encode tone.

Programming

The frequency of each tone may be set with Programming commands. Tone #1 may be selected for encode or decode. Tones #2-8 are decode only.

***5100x**	**Tone #1 ENCODE or DECODE** (x=1 ENCODE; x=0 DECODE)	TONE
***510T FF**	**Tone #T Frequency** (T=1-8; FF from table below)	TONE

Note

The controller must then be reset for these commands to take effect. Enter (COP prefix)18 after locking the controller.

CTCSS FREQUENCIES

01	67.0	**11**	-	**21**	136.5	**31**	192.8
02	71.9	**12**	100.0	**22**	141.3	**32**	203.5
03	74.4	**13**	103.5	**23**	146.2	**33**	210.7
04	77.0	**14**	107.2	**24**	151.4	**34**	218.1
05	79.7	**15**	110.9	**25**	156.7	**35**	225.7
06	82.5	**16**	114.8	**26**	162.2	**36**	233.6
07	85.4	**17**	118.8	**27**	167.9	**37**	241.8
08	88.5	**18**	123.0	**28**	173.8	**38**	250.3
09	91.5	**19**	127.3	**29**	179.9		
10	94.8	**20**	131.8	**30**	186.2		

Control Operator Selection

The Control Op may enable or disable controller recognition of each of the decode tones. When any of the enabled tones are detected, the controller permits access or command of the repeater as selected by Access / Control commands. The selection information is stored in macro sets for easy change of setup.

81-88	**Enable Tone #1-8**	1E-8E
91-98	**Disable Tone #1-8**	1D-8D

REVISIONS			
LTR	DESCRIPTION	DATE	APPROVED

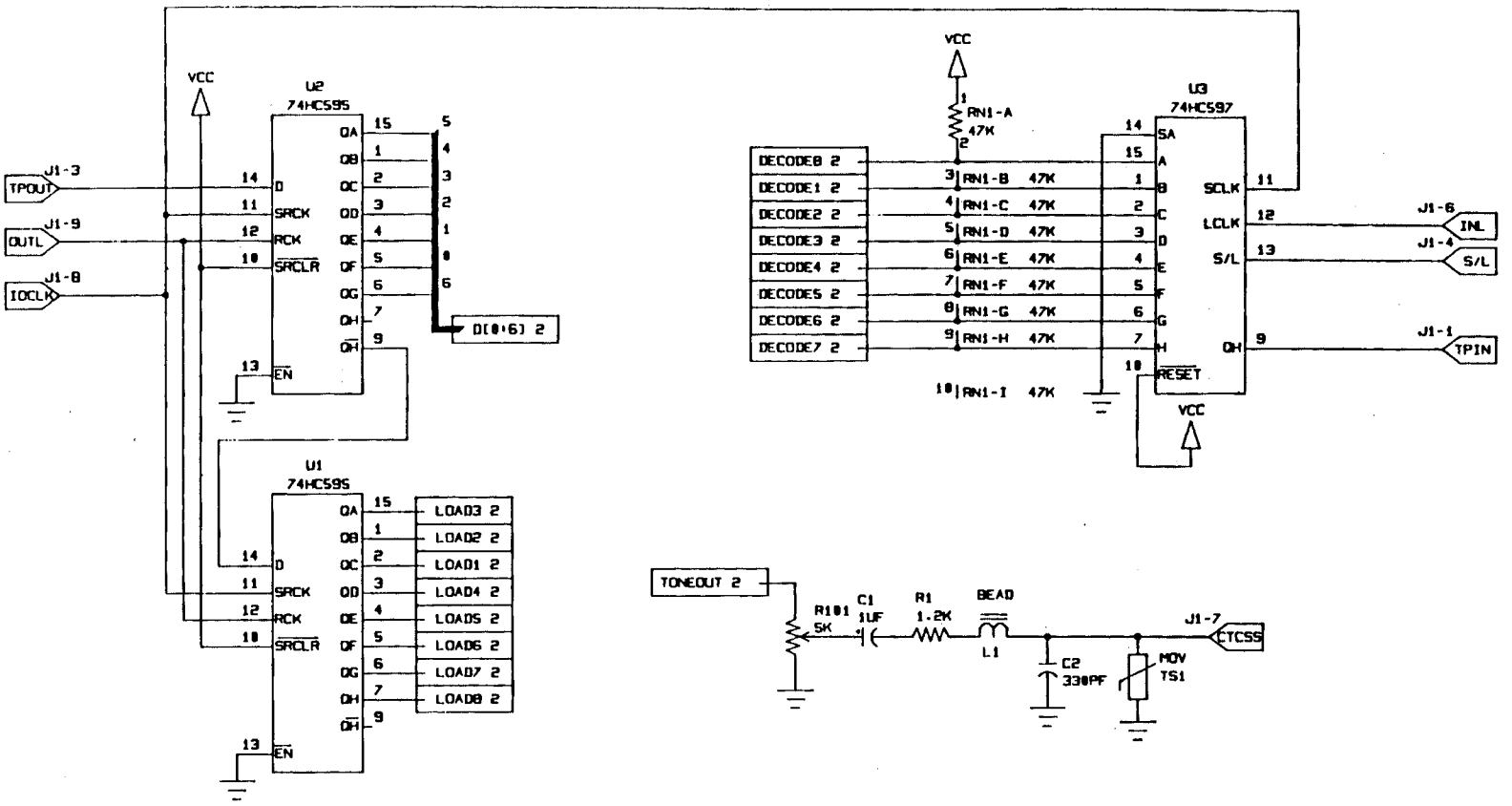

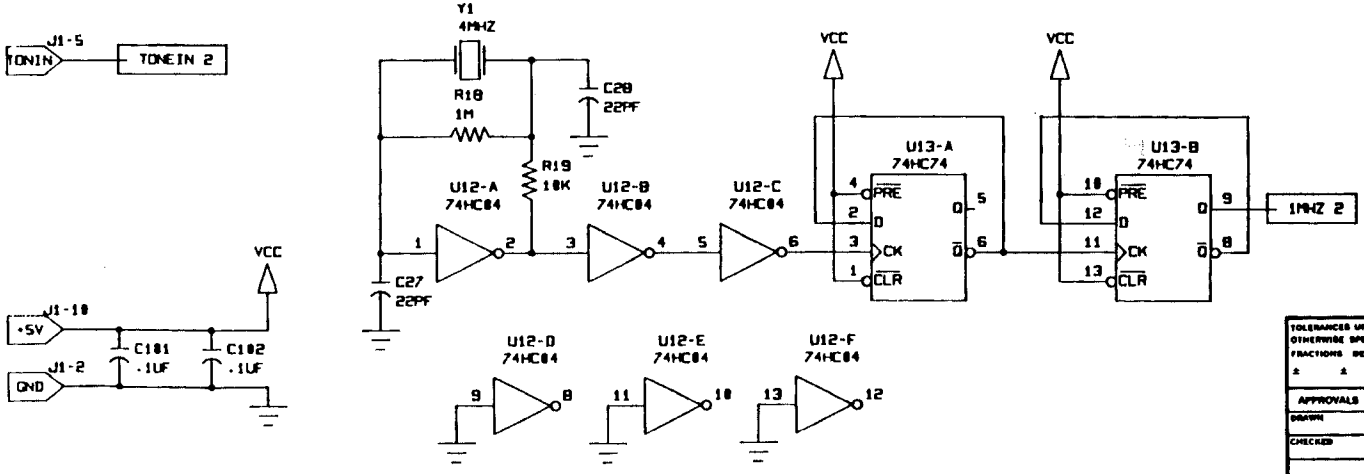

TOLERANCES UNLESS OTHERWISE SPECIFIED FRACTIONS ± DEC ± ANGLES ±		acc advanced computer controls, inc	
APPROVALS	DATE	RC-96 Tone Panel Board	
DRAWN	3/1/89		
CHECKED		SCALE	SIZE C / DRAWING NO.
		DO NOT SCALE DRAWING	SHEET 1 of 2

BISHOP GRAPHICS, INC

REVISIONS			
LTR	DESCRIPTION	DATE	APPROVED

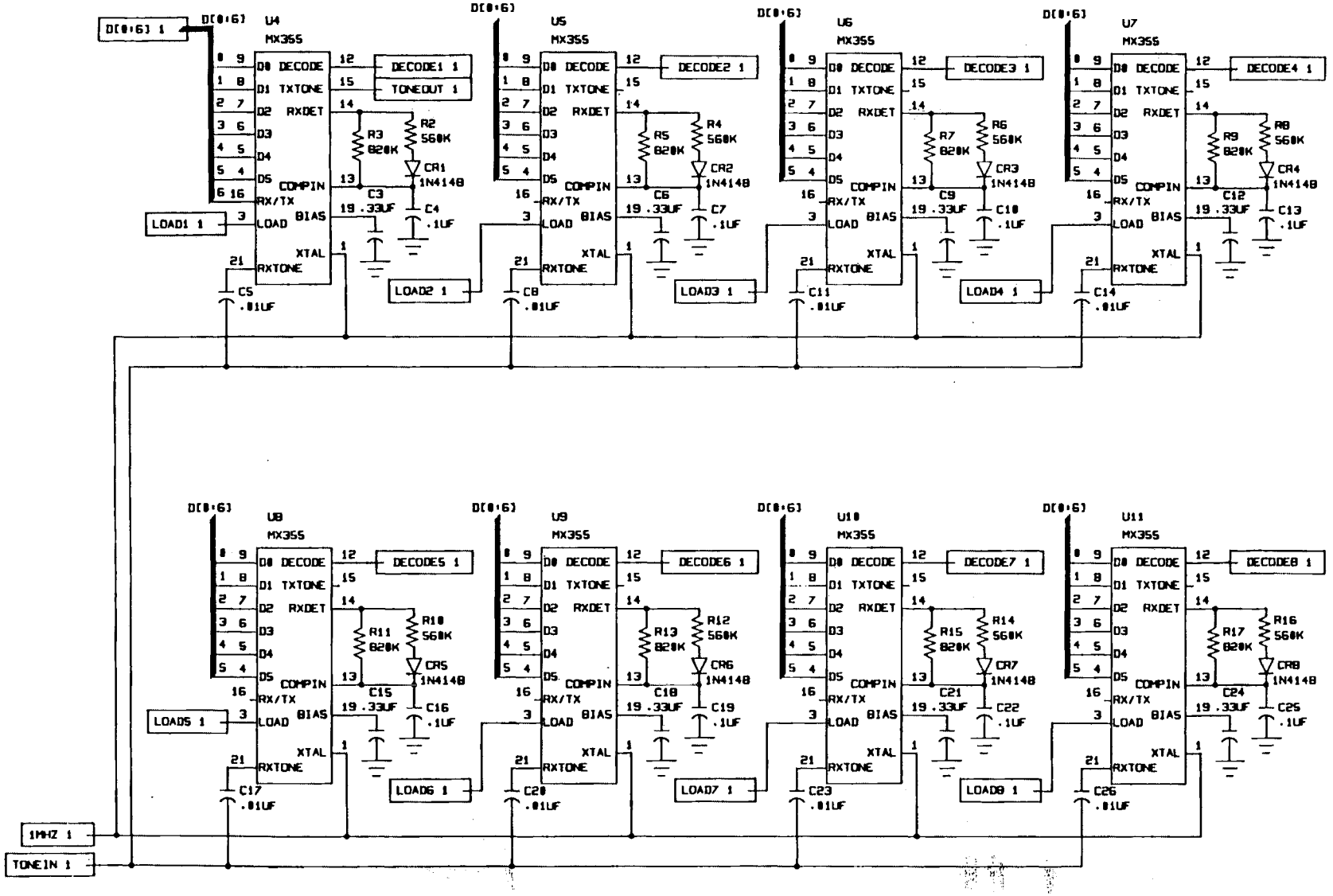

TOLERANCES UNLESS OTHERWISE SPECIFIED FRACTIONS DEC ANGLES ± ± ±	acc advanced computer controls, inc.		
APPROVALS	DATE	RC-96 Tone Panel Board	
DRAWN	3/1/89		
CHECKED		SCALE	SIZE C DRAWING NO.
		DO NOT SCALE DRAWING	SHEET 2 of 2

Glossary

abort — Message Editor command to terminate editing session without writing message.

activity timer — Patch timer which resets at start and end of each transmission.

AD-2 — Audio Delay Board option.

Anxious ID — ID attempted between user transmissions because it's getting late in the ID cycle.

alarm — Over the air indication of activated Alarm logic input.

autodialer — Speed dial patch where phone numbers are stored in memory.

Autopatch — Patch where user enters phone number of part of the command because the number isn't in an autodial location.

BCD — Binary Coded Decimal. Logic data format for control of remote base transceiver frequency synthesizer.

bulletin board — Synthesized speech or Morse code messages stored in memory by repeater owner which can be retreived by users.

click — Short transmission by user to initiate dialing of Autopatch and User Loadable Autodialer.

command — Touch-Tone sequence which instructs controller to perform a function.

command channel — Audio source for Touch-Tone decoder, including repeater receiver, phone line, and control receiver.

configurable	Remotely changable by repeater owner using Touch-Tone commands.
controller	Device which supervises operation of the repeater system.
Control Operator	Class of person having access to Control Operator commands.
Control Operator commands	Touch-Tone commands available to the repeater's Control Operators.
control receiver	RF receiver having highest priority of Touch-Tone control.
COP prefix	Programming prefix of all Control Operator level commands.
COR	Carrier-operated-relay. Receiver circuit which indicates signal present at receiver.
COS	Carrier-operated-switch. Same as COR.
courtesy tone	Indication to user that previous user has finished his transmission.
CPU	Central processing unit. The heart of the microcomputer.
CTCSS	Continuous tone-controlled squelch system – also known as subaudible tone or PL (Private Line).
custom hangup code	User definable hangup code which prevents malicious hangup of patch by jammer.
Digital Voice Recorder	ACC product which allows remote recording of voice messages with solid-state storage.
DIP switch	Dual-inline-package switch. Switch array accessible from rear panel which allows selection of certain options.
DVR	Digital Voice Recorder.
Emergency Autodialer	Autodialer which contains 10 emergency service phone numbers and response messages.
enter key	Touch-Tone key which instructs controller that the entire command has been entered. Optional over the air (D key), required over the phone and from the front panel (# key).
EPROM	Erasable-programmable-read-only-memory. Semiconductor memory device for storage of program and data.

E^2PROM	Electrically-erasable programmable read-only-memory. In-system reprogrammable non-volatile memory.
external device busy	Logic input from DVR or external tape playback system.
firmware	Computer program stored in EPROM.
five/six tone sequential	Paging tone signalling format consisting of five or six tones.
Forced CW ID	ID message attempted when controller cannot generate a synthesized speech ID because a user is talking.
frequency synthesizer	Device in remote base transceiver which determines transmit and receive frequency of transceiver.
group call	Paging tone signalling format consisting of eight second continuous tone, for alerting a group of pagers with common "B" tone.
hang time	Period that repeater transmitter stays on after input signal goes away.
high true	Logic output where high state indicates active function.
Initial ID	ID message attempted when a new repeater user appears after a period of inactivity.
interdigit timer	Timer which disqualifies a command sequence if too long a period between individual digits occurs.
Kerchunker filtering	Algorithm which discourages brief unidentified transmissions.
link	Hard wired or rf connection to another repeater or to transceiver.
lock	User Loadable Autodialer state which prohibits entry or erasing of phone numbers. Also state of controller where Programming commands may not be entered.
low true	Logic output where low state indicates active function.
message editor	Portion of controller Programming command set which allows repeater owner to construct Morse code and synthesized speech messages from the available character set and vocabulary.
offhook	State of telephone circuit where call is in progress.
onhook	State of telephone circuit where call is not presently in progress.

open collector	Logic output consisting of solid state contact closure to ground without capability of sourcing current.
pad test	User command procedure which permits users to test their Touch-Tone pads for proper operation.
paging	Selective calling technique involving tone signalling.
patch	General term for phone patch, covering Autopatch, User Loadable Autodialer, Emergency Autodialer, and reverse patch.
Pending ID	ID message attempted when no repeater activity is in progress or when the repeater carrier is allowed to drop.
prefix	Portion of a Touch-Tone command which precedes the root portion.
program	Computer instructions stored in memory. Also the act of remotely configuring the controller.
Programming commands	Touch-Tone commands which enable the repeater owner to remotely program repeater characteristics.
PTT	Push-to-talk. Logic output from the controller which tells the transmitter to transmit.
QSO	Exchange of transmissions between users.
RAM	Random-access-memory. Semiconductor memory used for temporary storage by the controller.
readback	Synthesized speech or Morse code acknowledgement by the controller.
regenerated Touch-Tone	Touch-Tone audio synthesized by the controller into the phone line for improved patch dialing reliability.
remote base	Remotely controlled Amateur radio station. Generally tied to repeater to allow shared access.
remote programming	The ability to remotely change various characteristics of the controller.
repeater owner	A person with access to Programming commands.
reset	Act of computer starting execution of its program from the beginning. Results from pushing Reset button, entering the Reset Control Operator command, or protective circuitry.

reverse patch	Phone patch initiated from the phone line.
root	Portion of command following prefix.
site alarm	Same as alarm.
spare audio input	Audio input to the controller which may be selected by users for monitoring. May be used for weather radio or similar audio source. Same hardware input as Link Receiver.
Special ID	ID message attempted at Pending ID time when selected by Control Operator.
speech synthesizer	Electronic device which generates audio closely resembling human speech.
squelch tail	Noise burst from FM receiver when input signal goes away.
subaudible tone	Same as CTCSS.
tail	Period after user unkeys when repeater transmitter is still up.
tail message	Synthesized speech or Morse code message generated just before repeater transmitter drops off.
timeout timer	Timer which disables repeater transmitter if a continuous signal appears at repeater receiver for too long a period.
to end of transmission timer	Timer which disqualifies a Touch-Tone command if too long a period elapses from the last Touch-Tone key to the end of the user's transmission.
Tone Panel	Remotely programmable multi-tone CTCSS decoder/ encoder.
Touch-Tone Access Mode	Access mode which can be activated with user Touch-Tone commands.
two-tone sequential	Paging tone signalling format consisting of a two tone sequence.
unlock	State of user Loadable Autodialer which permits entry and erasure of telephone numbers from memory. Also the state of the controller when Programming commands are accepted.
unlock code	Touch-Tone command sequence which places the controller in the state where Programming commands are accepted.
User commands	Class of Touch-Tone commands available to general repeater users.

User Function Logic Outputs — Logic outputs from the controller which may be remotely controlled with Touch-Tone commands for remote control of various equipment at the repeater site.

User Loadable Autodialer — Autodialer which contains 190 phone numbers which may be loaded and erased by users remotely.

Users — Persons with access to User commands.

write — The act of storing Programming information into memory using Programming commands.

Index

access 39, 43, 65
adjustments 13, Appendix F
alarm
    interface 74
    commands 48
    message 56
    site alarm 74
audio
    input characteristics 10
    level adjustments 13, Appendix F
    output characteristics 11, 13
    receiver interface 10
    transmitter interface 11
Autodialer
    see "User Loadable Autodialer"
        and "Emergency Autodialer"
Autopatch
    command codes 45, 58, 59
    cover tone 25, 6-4, 6-5
    operation 21, 45
    timers 26, 45, 7-9
    toll restrict 23, 45
    hangup 23, 24
    see also:
        Emergency Autodial
        patch
        reverse patch
        User Loadable Autodial
battery 8

bulletin board
programming 56, 58
selection 33
command codes 58, Appendix C
command channels 63, 43, 44
command evaluation 43, 64
connectors
audio 10, Appendix F
logic 10, Appendix F
phone line 12, Appendix F
power 8, Appendix F
Control Operator commands 15, 41, Chapter 5, 58, 59
control receiver
command channel 63, 64
interface 3
COR
see "COS"
COS
interface 9
levels 9
courtesy tone
commands 57
operation 57, 67
selection 50, 57
telemetry 57, 67
CTCSS 43, 65
custom hangup 24
demo messages 33, 58
Digital Voice Recorder 56, 82
DIP switches 13, Appendix F
D-key 18
editor
see "Message Editor"
Emergency Autodial
commands 30, 46, 47, 58, 59
loading numbers 59
loading messages 55
operation 30
external tape player 56, 81, 82
full-duplex
selection 25
commands 47
glossary Glossary
ground 8, 90, Appendix F
hang time 49, 58, 64, 66

ID
commands 48
editing 52-55
previewing 33, 54
selection 48, 66
timing 66
initialization 50
interfacing
alarm 74
control receiver 73
COS 9
CTCSS decoder 71
Digital Voice Recorder 82
external tape player 81
levels, audio 10, 13
levels, logic 10, 75
link 77-81
phone line 12, Appendix F
power 8, Appendix F
PTT 10
receiver audio 10
remote base 77-81
remote control outputs 75
S-meter 72
site alarm 74
spare audio 81
transmitter audio 11
Kerchunker filtering 69
link
see "Remote Base"
lock
configuration 51
User Loadable Autodialer 27, 46
macro sets 16, 41, 60
message editor 52-56
microprocessor reset 50
Morse code
character codes 53
editing messages 52-56
pitch 56
speed 56
noise filtering 69
pad test 9, 21
paging memories 60
paging tones 37-39, 61

patch
activity timer 23, 47, 58
custom hangup code 24
dialing prefix 58-59
hangup 23, 58
redial 24
timer extend 26
utility prefix 22, 58
see also:
Autopatch
Emergency Autodial
telephone line
User Loadable Autodial
reverse patch
phone line
see "Telephone line"
pocket pagers 37, 58, 60-61
power 8, 90, Appendix F
powerup state
see "Macro Sets"
programming
commands 15, 17, Chapter 6
lock 17, 51
unlock 17, 51, 52
push-to-talk (PTT) 10
Questions and Answers 91-94
remote base
commands 34-37, 45, 58
interfacing 77-81
operation 34-37
remote control outputs
see "User Function Outputs"
reset 50
reverse patch
commands 31-33, 47-48, 58
operation 31, 64-65
ringout 58
signal strength 33, 58, 72
site alarm 48, 56, 74
S-Meter test 33, 58, 72
spare audio
command 39-40
interface 81
operation 39

speech synthesizer
commands 49, 54-55, Appendix C
message editor 52-56
pitch adjustment Appendix F
vocabulary Appendix C
squelch gate
see "COS"
subaudible tone
see "CTCSS"
switches
control receiver COS Appendix F
repeater rcvr COS 9, Appendix F
repeater tx PTT 10, Appendix F
tail messages
commands 48, 55
operation 48, 67
programming 48, 52-55
selection 48
timing 58, 67
telephone line
control 64
interface 12
sharing 83
signalling type 59
timer extend 26, 32, 58
timers
activity (patch) 47
Autopatch 26, 32, 47, 57
changing 42, 57-58
command codes 57-58
Emergency Autodial 57
interdigit 19
patch timer 26
phone answer delay 57
repeater timer 42-43
talkout 58
tail message 58, 68
telephone 58
to end of transmission 19
timeout 57, 68
User Loadable Autodial 57
Tone Panel 62, Appendix I

Touch-Tone
access mode 39, 43, 58
command evaluation 17
cover tone 25, 47, 56
decoder
see "command channels"
muting 18, 37, 49, 69
pad test 9, 21
patch signalling 59
troubleshooting 89-90
unlock
configuration 17, 51
User Loadable Autodialer 45
unmute Touch-Tone 18, 37, 49, 69
User commands 15, 16, Chapter 4
commands 44-45, Appendix A
User Function Outputs
commands 40, 58
description 81, 40
interfacing 75, 81
User Loadable Autodialer
commands 27-28, 29-30, 46, 58
erasing 27-28
loading 27-28
operation 29-30, 45-46
see also:
Autopatch
Emergency Autodial
patch
reverse patch
vocabulary Appendix C
zero hang time 49