ICOM

TONE ENCODER MICROPHONE IC-HM8

INSTRUCTION MANUAL

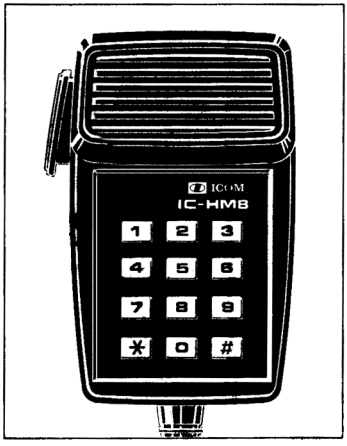

I. INSTRODUCTION

Congratulations on the purchase of the IC-HM8 Tone Encoder Microphone. The IC-HM8 is equipped with a microphone unit and tone encoder unit in a single convenient housing, with curl cord and microphone connector. The tone encoder unit, that consists of a highly accurate IC for the tone generator, requires no frequency adjustment.

Power for the IC, tone generator, is supplied from the transceiver through the microphone cord. The IC-HM8 can be connected direct to ICOM Transceivers, Models IC-255A, IC-260A, IC-251A, etc. that have 8-pin microphone connectors. For the operation with other transceivers, refer to the drawing.

II. METHOD OF USE

(1) Connect the IC-HM8 to the microphone connector of your transceiver firmly.
(2) Slide to power on the switch in the key board.
(3) Push the PTT (Push to Talk) switch and transmit on the frequency you will operate. Then, touch the keys to transmit your code number to open repeaters.

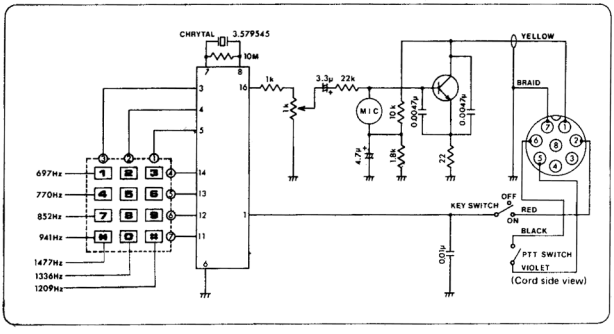

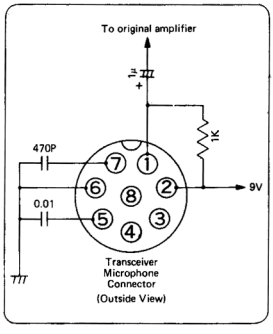

ICOM INCORPORATED

Another PDF restoration brought to you by www.zigpir.com