ICOM

SERVICE MANUAL

IC-R7000

COMMUNICATIONS RECEIVER

ICOM INCORPORATED

FOREWORD

The most sophisticated, continuous coverage receiver on the market today, the **IC-R7000** is the result of both advanced ICOM engineering and state-of-the-art computer interface technology from ICOM such as the new CI-V System: a feature that allows for easy and convenient computer control of your IC-R7000.

Equipped with 99 internal memories that are completely owner-programmable, the **IC-R7000** is unmatched in scanning and coverage versatility within the 25 to 1300 MHz range and may even cover frequencies up to 2000 MHz. Low band, aircraft, marine, business, FM, amateur radio, emergency services, government, and television bands - all are conveniently available and immediately accessible with the **IC-R7000**.



ASSISTANCE

Five separate versions of the **IC-R7000** have been designed for use in the U.S.A., Europe, France, Australia, and Germany. This service manual covers every version. When using the manual each model can be referred to by the following assigned version numbers:

#02 U.S.A. version
#03 Europe version
#04 France version
#05 Australia version
#06 Germany version

If you require assistance or information regarding the operation and capabilities of the **IC-R7000**, please contact your nearest authorized ICOM Dealer or ICOM Service Center.

TABLE OF CONTENTS

SECTION 1 SPECIFICATIONS ..... **1 — 1**

SECTION 2 OUTSIDE AND INSIDE VIEWS ..... **2 — 1 ~ 4**

2 - 1 FRONT PANEL ..... 2 — 1
2 - 2 REAR PANEL ..... 2 — 2
2 - 3 INSIDE VIEW (PLL UNIT) ..... 2 — 2
2 - 4 INSIDE VIEW (MAIN UNIT) ..... 2 — 3
2 - 5 INSIDE TOP VIEW (RF AND IF UNITS) ..... 2 — 3
2 - 6 INSIDE BOTTOM VIEW (POWER SUPPLY AND DC-DC CONVERTER UNITS) ..... 2 — 4
2 - 7 INSIDE BOTTOM VIEW (LOGIC UNIT) ..... 2 — 4

SECTION 3 BLOCK DIAGRAM ..... **3 — 1**

SECTION 4 CIRCUIT DESCRIPTION ..... **4 — 1 ~ 10**

4 - 1 RECEIVER CIRCUITS ..... 4 — 1 ~ 6
4 - 2 POWER SUPPLY CIRCUITS ..... 4 ~ 6
4 - 3 PLL CIRCUITS ..... 4 — 7 ~ 8
4 - 4 LOGIC CIRCUITS ..... 4 — 8 ~ 10
4 - 5 DISPLAY CIRCUITS ..... 4 — 10
4 - 6 KEYBOARD CIRCUITS ..... 4 — 10

SECTION 5 MECHANICAL PARTS AND DISASSEMBLY ..... **5 — 1 ~ 5**

5 - 1 FRAME DISASSEMBLY ..... 5 — 1
5 - 2 FRONT PANEL DISASSEMBLY ..... 5 — 2
5 - 3 REAR PANEL DISASSEMBLY ..... 5 — 3
5 - 4 TOP SIDE CONNECTOR CONNECTIONS ..... 5 — 4
5 - 5 BOTTOM SIDE CONNECTOR CONNECTIONS ..... 5 — 5

SECTION 6 MAINTENANCE AND ADJUSTMENT ..... **6 — 1 ~ 11**

6 - 1 PREPARATION BEFORE SERVICING ..... 6 — 1
6 - 2 PLL ADJUSTMENT ..... 6 — 2 ~ 3
6 - 3 LOCAL OSCILLATOR ADJUSTMENT ..... 6 — 4 ~ 5
6 - 4 RECEIVER ADJUSTMENT ..... 6 — 6 ~ 11

SECTION 7 BOARD LAYOUTS ..... **7 — 1 ~ 19**

7 - 1 INTERCONNECTION ..... 7 — 1
7 - 2 FRONT UNITS ..... 7 — 2 ~ 3
7 - 3 MAIN UNIT ..... 7 — 4 ~ 5
7 - 4 IF UNIT ..... 7 — 6 ~ 7
7 - 5 RF UNIT ..... 7 — 8 ~ 9
7 - 6 LOGIC UNIT ..... 7 — 10 ~ 11
7 - 7 PLL UNIT ..... 7 — 12 ~ 13
7 - 8 DISPLAY UNIT ..... 7 — 14 ~ 15
7 - 9 REG AND DL-REG UNITS ..... 7 — 16 ~ 17
7 - 10 DC-DC, EF AND KEYBOARD UNITS ..... 7 — 18 ~ 19

SECTION 8 PARTS LIST ..... **8 — 1 ~ 31**

SECTION 9 VOLTAGE DIAGRAMS ..... **9 — 1 ~ 4**

9 - 1 IC-R7000 ..... 9 — 1 ~ 2
9 - 2 TV-R7000 (OPTION) ..... 9 — 3
9 - 3 RC-12 (OPTION) ..... 9 — 4

SECTION 10 SCHEMATIC DIAGRAM ..... **SEPARATE**

SECTION 1 SPECIFICATIONS

- Receive frequency range :

VERSION	FREQUENCY COVERAGE (MHz)
#02, #03	25~ 999.999 *1025~1999.999
#04, #05	**25~ 999.999 *1025~1999.999
#06	28.0~29.7, 144,0~146.0 430.0~440.0

* Specifications guaranteed from 1240~1300MHz.
** Excluding 87.5~108MHz.

- Receive modes : A3E (AM), F3E (FM), J3E (SSB)
- Sensitivity :

25~999.999MHz	FM	: Less than −113dBm for 12dB SINAD
	FM (wide)	: Less than −107dBm for 12dB SINAD
	AM	: Less than −107dBm for 10dB S/N
	SSB	: Less than −117.5dBm for 10dB S/N
1240~1300MHz	FM	: Less than −113dBm for 12dB SINAD
	FM (wide)	: Less than −101dBm for 12dB SINAD
	AM	: Less than −101dBm for 10dB S/N
	SSB	: Less than −117.5dBm for 10dB S/N

- Squelch sensitivity :

FM (Threshold)	Less than −101dBm for noise squelch
FM (Tight)	More than −17dBm for meter squelch at S9+60dB
SSB (Threshold)	More than −97.5dBm for meter squelch

- Selectivity :

FM, AM	±7.5kHz minimum at −6dB
FM (narrow), AM (narrow)	±3.0kHz minimum at −6dB
FM (wide)	±75kHz minimum at −6dB
SSB	±1.4kHz minimum at −6dB

- Spurious and image response rejection : More than 60dB
- Frequency stability :

25~999.999MHz	±5ppm at 0°C~+50°C
1240~1300MHz	±10ppm at 0°C~+50°C

- Receive system :

25~999.999MHz	: FM, AM, SSB	Triple-conversion superheterodyne
	FM (wide)	Double-conversion superheterodyne
1240~1300MHz	: FM, AM, SSB	Quadruple-conversion superheterodyne
	FM (wide)	Triple-conversion superheterodyne

- Intermediate frequencies :

25~512MHz	: 1st	778.7MHz
	2nd	10.7MHz
	3rd	455kHz excluding FM (wide) mode
512~999.999MHz	: 1st	266.7MHz
	2nd	10.7MHz
	3rd	455kHz excluding FM (wide) mode

- Frequency control : CPU based 100Hz step digital PLL synthesizer
- Number of memory channels : 99 channels
- Supply voltage : 117V (#02), 230V (#03, #04, #05), 220V (#06) AC (50/60Hz)
- Current drain :

Receiving	1.7A at maximum audio output
Squelched	1.4A

- Antenna impedance : 50Ω
- Audio output : More than 2.5W at 10% distortion with an 8Ω load
- Audio output impedance : 4~8Ω
- Usable temperature : −10°C~+60°C
- Dimensions : 286(303)mm(W)×110(127)mm(H)×276(319)mm(D)
  Bracketed values include projections.
- Weight : Approximately 8.0kg (excluding options)

All stated specifications are approximate and subject to change without notice or obligation.

2-1 FRONT PANEL

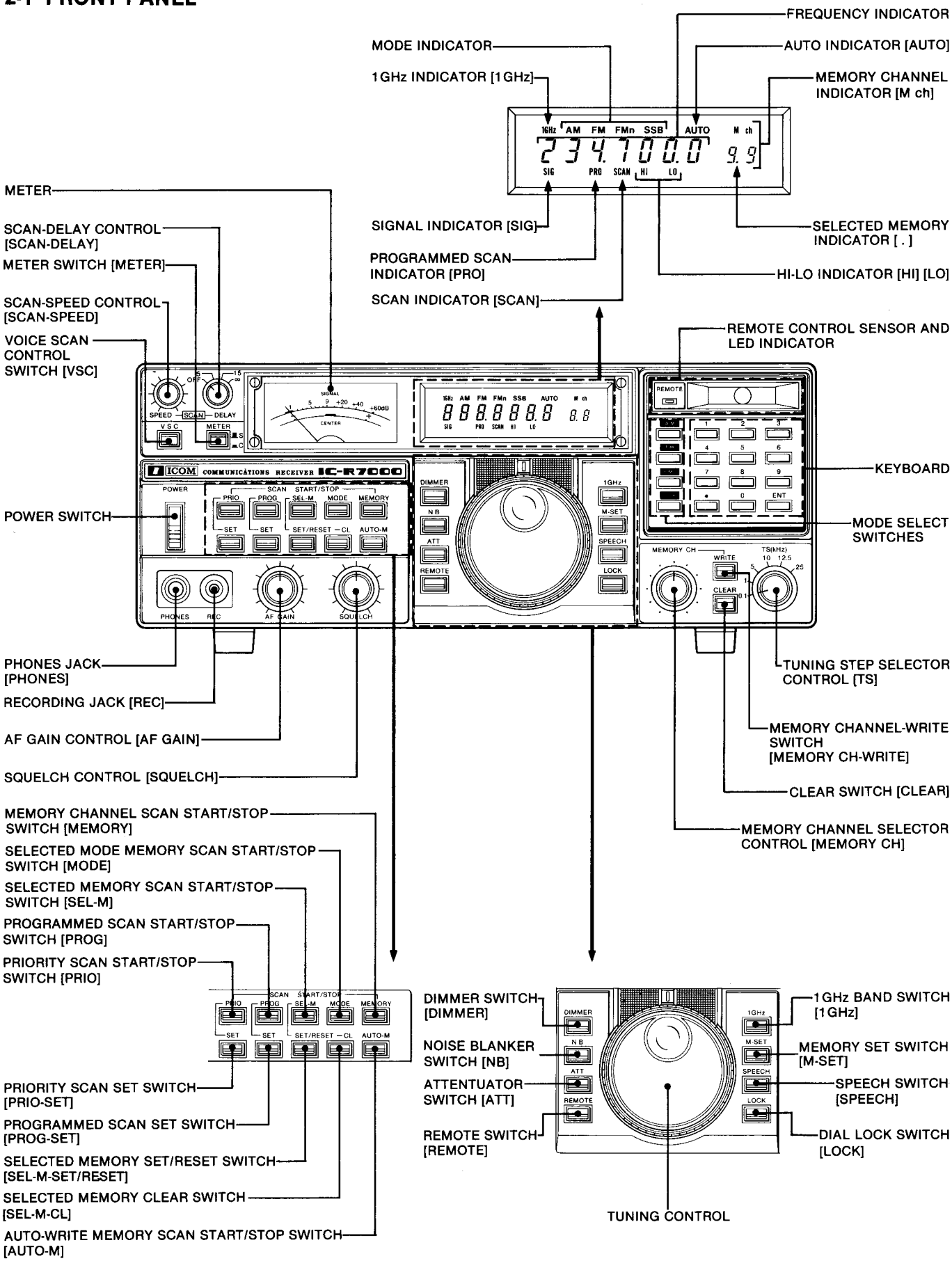

2-2 REAR PANEL

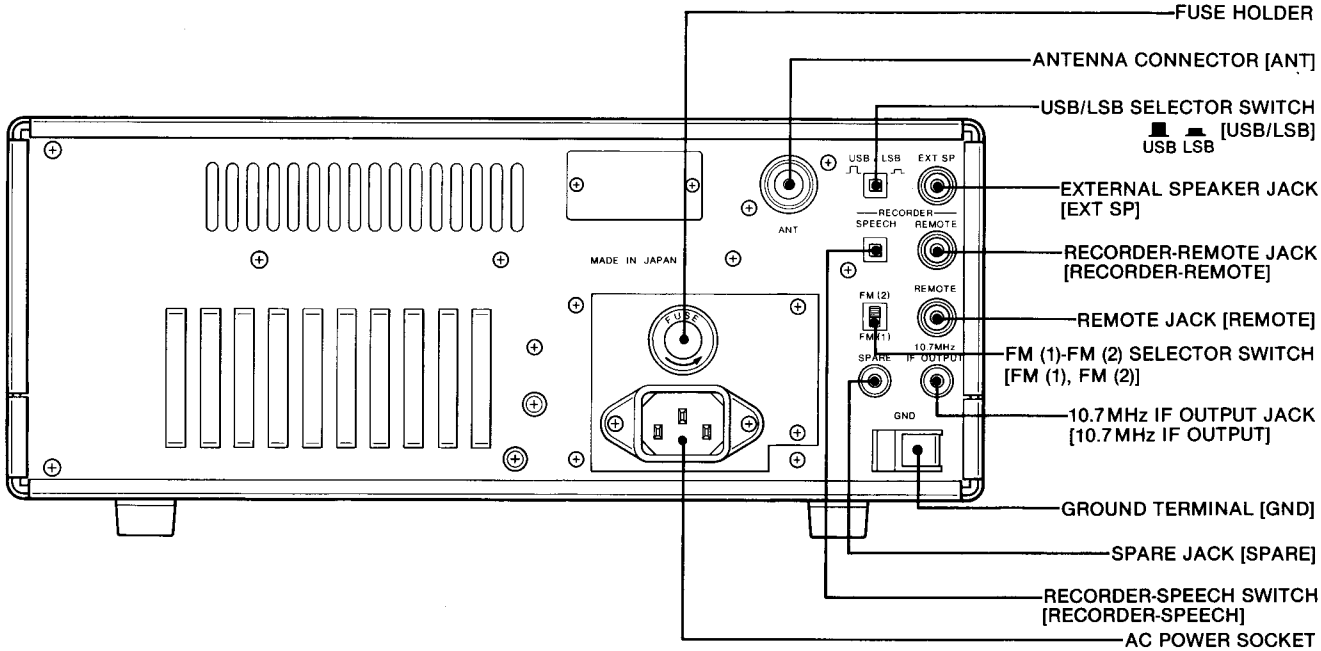

2-3 INSIDE VIEW (PLL UNIT)

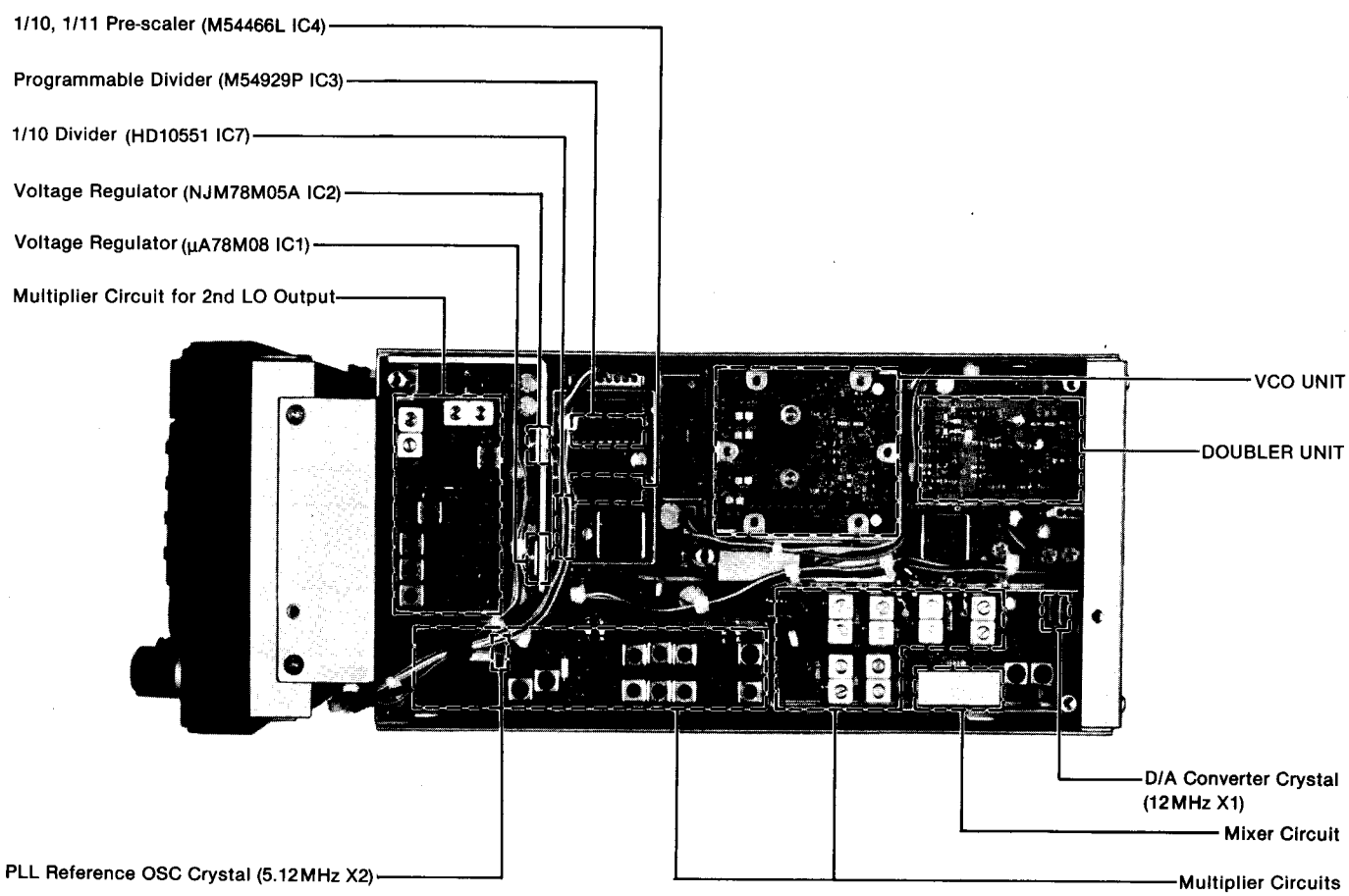

2-4 INSIDE VIEW (MAIN UNIT)

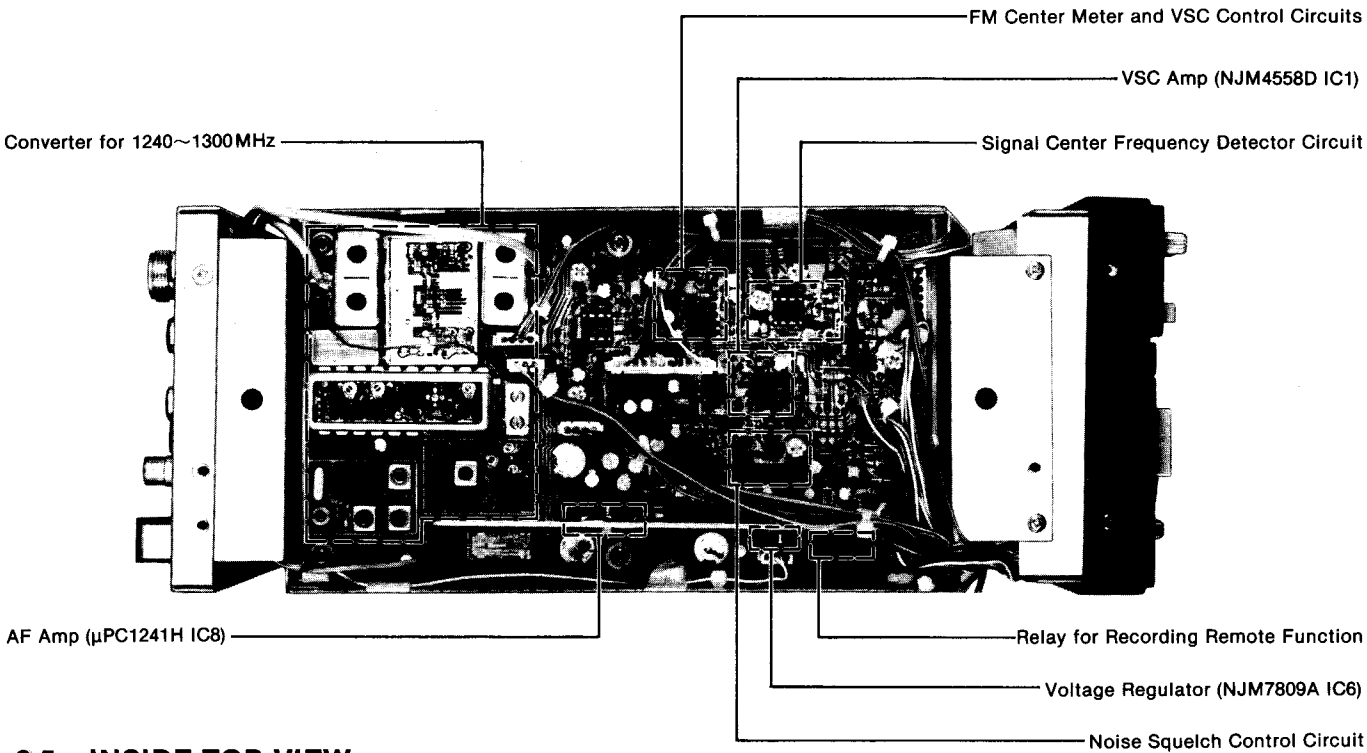

2-5 INSIDE TOP VIEW (RF AND IF UNITS)

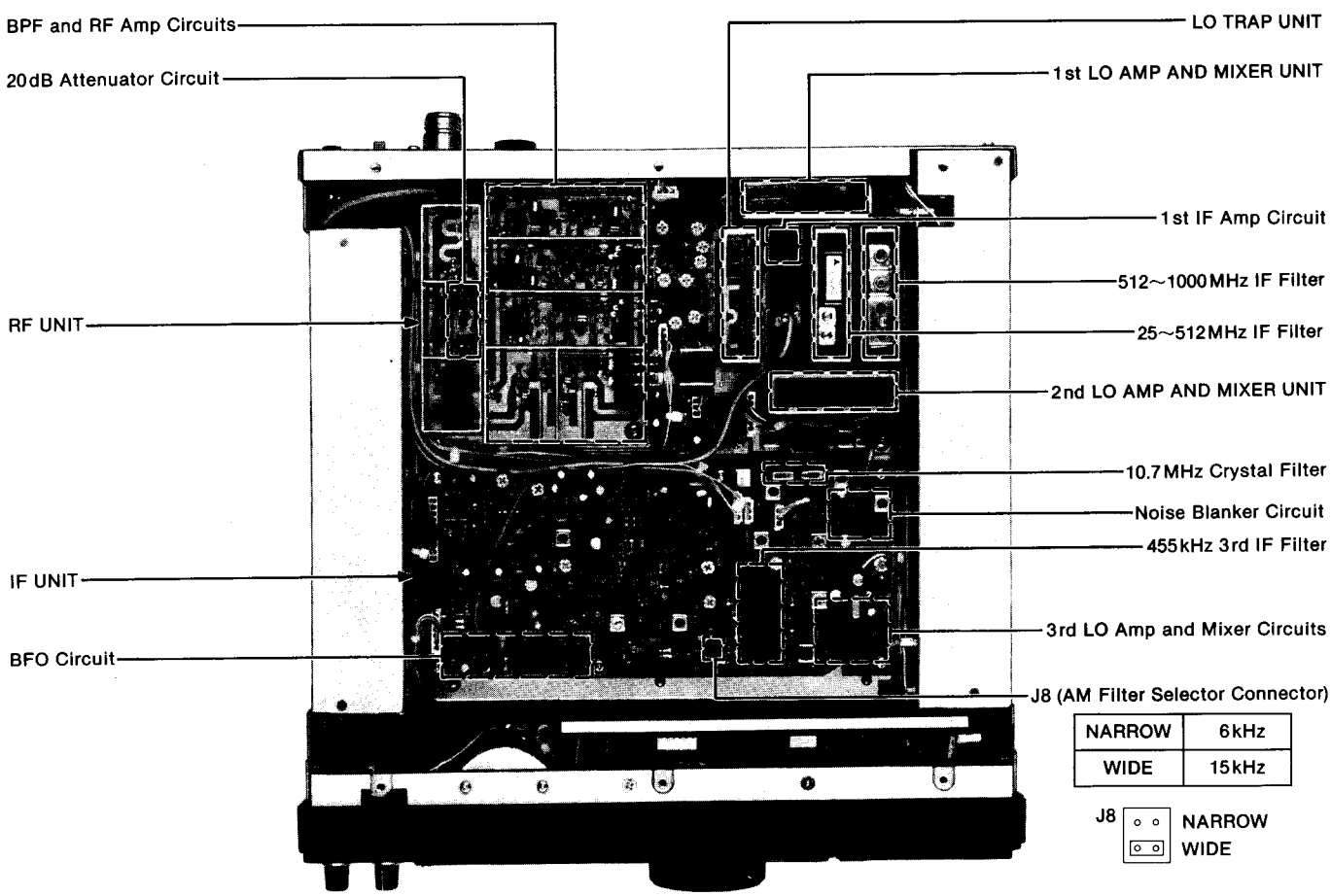

2-6 INSIDE BOTTOM VIEW (POWER SUPPLY AND DC-DC CONVERTER UNITS)

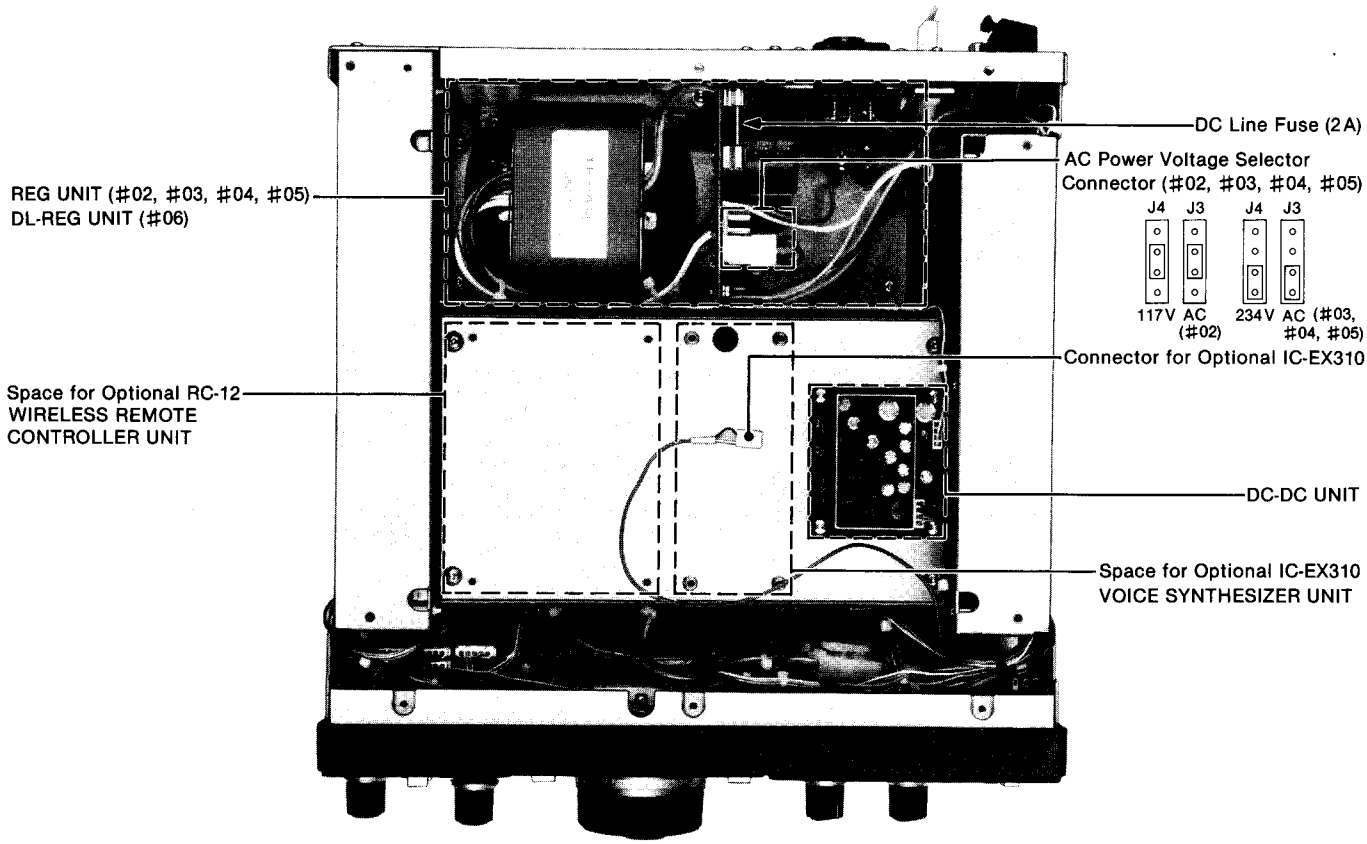

2-7 INSIDE BOTTOM VIEW (LOGIC UNIT)

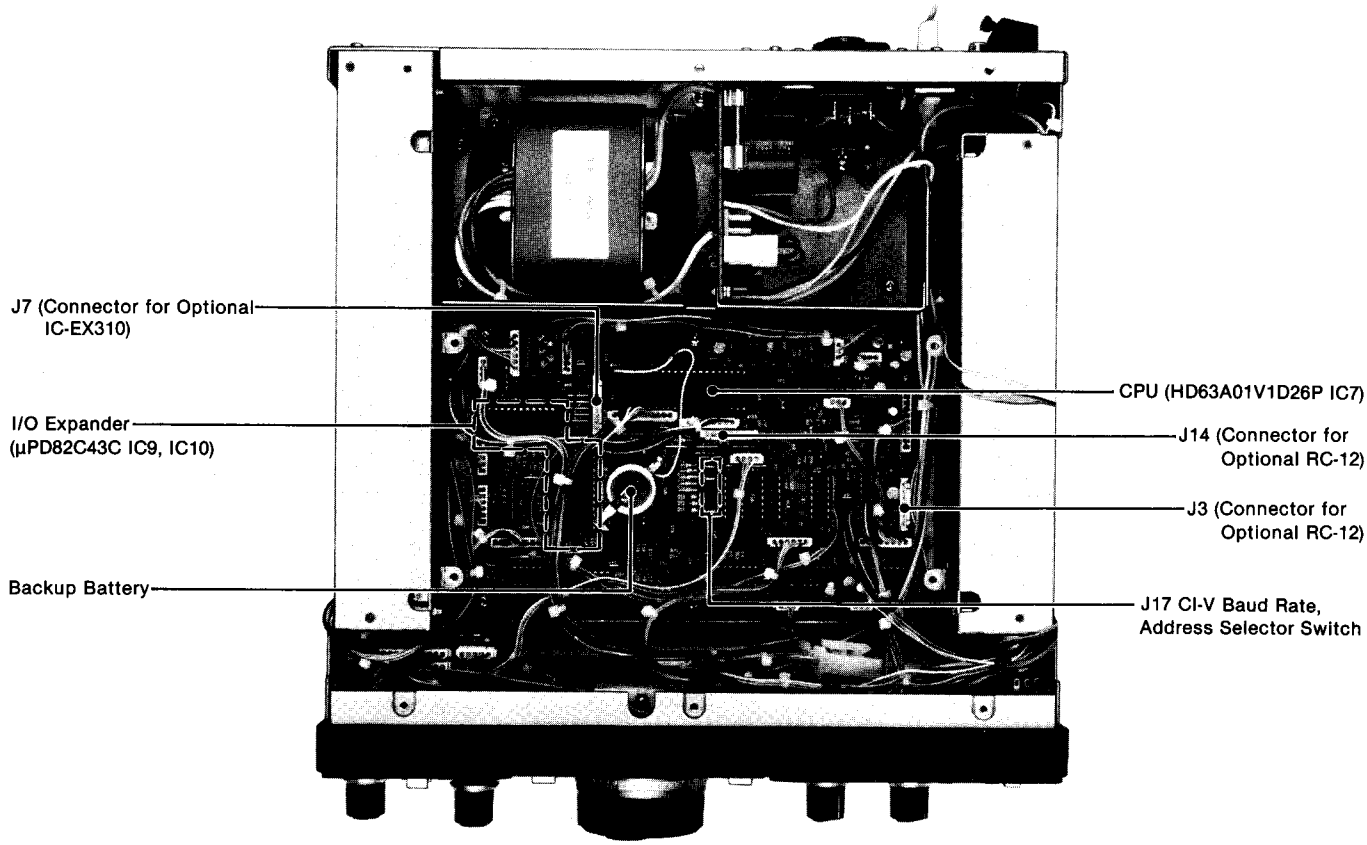

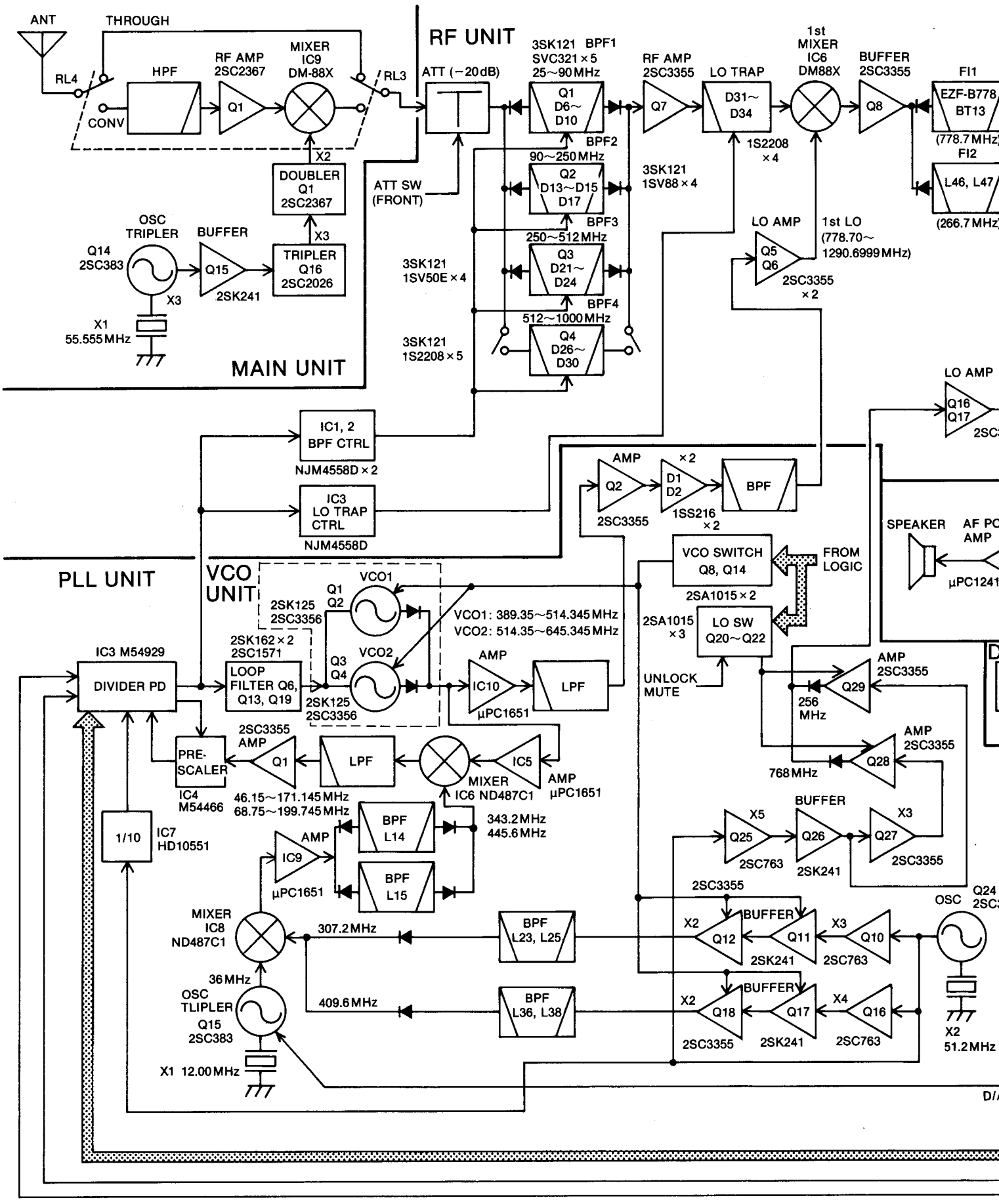
ANT
THROUGH
RL4
HPF
RF AMP
2SC2367
Q1
MIXER
IC9
DM-88X
RL3
CONV
X2
DOUBLER
Q1
2SC2367
X3
TRIPLER
Q16
2SC2026
BUFFER
Q15
2SK241
OSC
TRIPLER
Q14
2SC383
X3
X1
55.555MHz
MAIN UNIT
RF UNIT
ATT (−20dB)
ATT SW
(FRONT)
3SK121 BPF1
SVC321×5
25~90MHz
Q1
D6~
D10
BPF2
90~250MHz
Q2
D13~D15
D17
BPF3
250~512MHz
Q3
D21~
D24
BPF4
512~1000MHz
Q4
D26~
D30
3SK121
1SV50E×4
3SK121
1S2208×5
RF AMP
2SC3355
Q7
LO TRAP
D31~
D34
1S2208
×4
3SK121
1SV88×4
1st
MIXER
IC6
DM88X
BUFFER
2SC3355
Q8
FI1
EZF-B778
BT13
(778.7MHz)
FI2
L46, L47
(266.7MHz)
LO AMP
Q5
Q6
2SC3355
×2
1st LO
(778.70~
1290.6999MHz)
IC1, 2
BPF CTRL
NJM4558D×2
IC3
LO TRAP
CTRL
NJM4558D
AMP
Q2
2SC3355
×2
D1
D2
1SS216
×2
BPF
LO AMP
Q16
Q17
2SC
SPEAKER
AF PO
AMP
µPC1241
PLL UNIT
VCO
UNIT
VCO1
Q1
Q2
2SK125
2SC3356
VCO1: 389.35~514.345MHz
VCO2: 514.35~645.345MHz
2SK162×2
2SC1571
VCO2
Q3
Q4
2SK125
2SC3356
VCO SWITCH
Q8, Q14
2SA1015×2
FROM
LOGIC
2SA1015
×3
LO SW
Q20~Q22
UNLOCK
MUTE
IC3 M54929
DIVIDER PD
LOOP
FILTER Q6,
Q13, Q19
AMP
IC10
µPC1651
LPF
AMP
2SC3355
Q29
256
MHz
AMP
2SC3355
Q28
768MHz
2SC3355
AMP
PRE-
SCALER
IC4
M54466
Q1
LPF
MIXER
IC6 ND487C1
IC5
AMP
µPC1651
46.15~171.145MHz
68.75~199.745MHz
343.2MHz
445.6MHz
1/10
IC7
HD10551
AMP
IC9
µPC1651
BPF
L14
BPF
L15
BUFFER
X5
Q25
2SC763
Q26
2SK241
X3
Q27
2SC3355
2SC3355
MIXER
IC8
ND487C1
307.2MHz
BPF
L23, L25
BUFFER
X2
Q12
Q11
2SK241
X3
Q10
2SC763
OSC
Q24
2SC
36MHz
OSC
TLIPLER
Q15
2SC383
409.6MHz
BPF
L36, L38
BUFFER
X2
Q18
Q17
2SK241
X4
Q16
2SC763
2SC3355
X1 12.00MHz
X2
51.2MHz

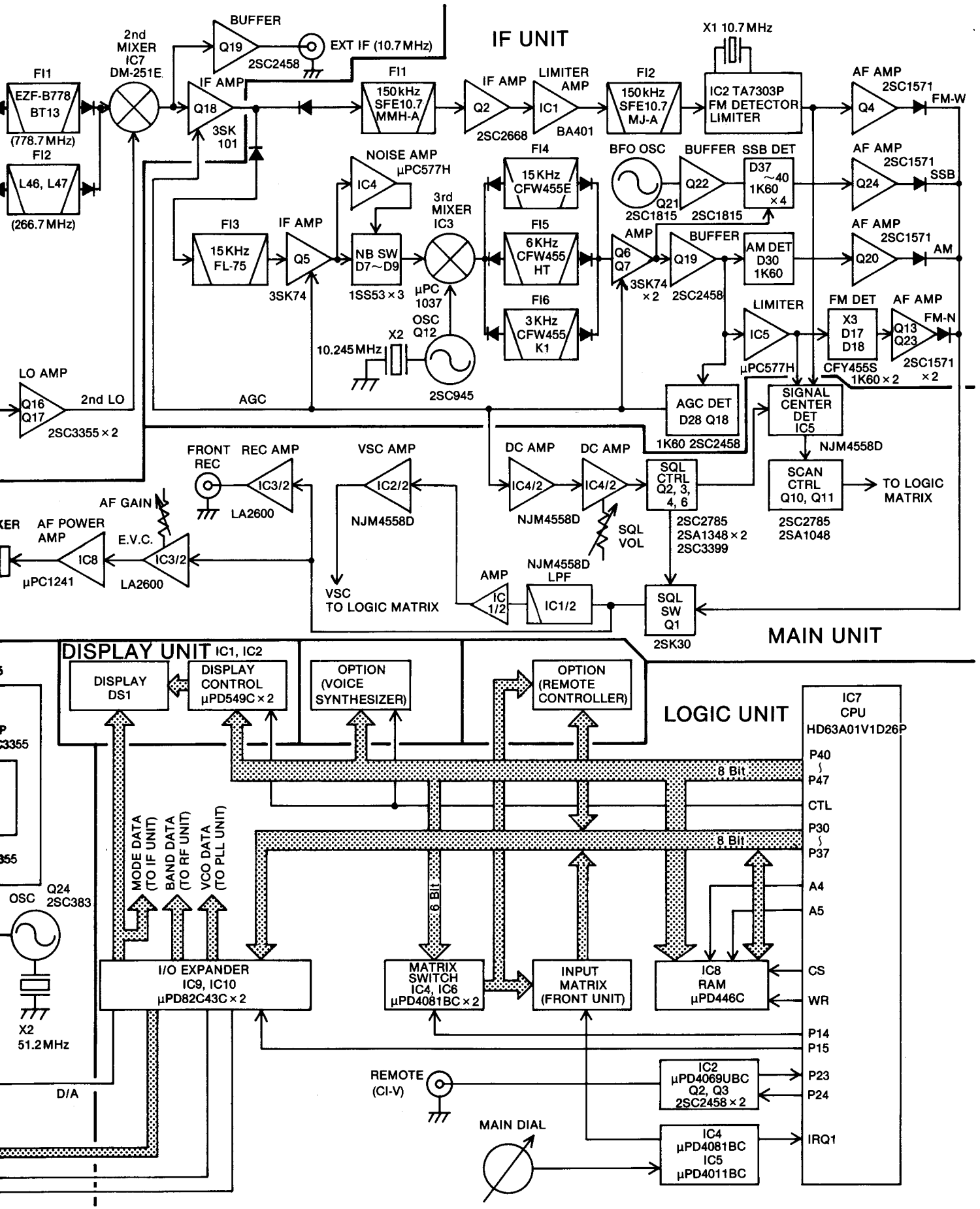
IF UNIT
2nd MIXER IC7 DM-251E
BUFFER Q19 2SC2458
EXT IF (10.7MHz)
FI1 EZF-B778 BT13 (778.7MHz)
FI2 L46, L47 (266.7MHz)
IF AMP Q18 3SK 101
FI1 150kHz SFE10.7 MMH-A
IF AMP Q2 2SC2668
LIMITER AMP IC1 BA401
FI2 150kHz SFE10.7 MJ-A
X1 10.7MHz
IC2 TA7303P FM DETECTOR LIMITER
AF AMP 2SC1571 Q4 FM-W
NOISE AMP µPC577H IC4
FI3 15KHz FL-75
IF AMP Q5 3SK74
NB SW D7~D9 1SS53×3
3rd MIXER IC3
µPC 1037
OSC Q12 X2 10.245MHz 2SC945
FI4 15KHz CFW455E
FI5 6KHz CFW455 HT
FI6 3KHz CFW455 K1
BFO OSC Q21 2SC1815
BUFFER Q22 2SC1815
SSB DET D37 ~40 1K60 ×4
AF AMP 2SC1571 Q24 SSB
AMP Q6 Q7 3SK74 ×2
BUFFER Q19 2SC2458
AM DET D30 1K60
AF AMP 2SC1571 Q20 AM
LIMITER IC5 µPC577H
FM DET X3 D17 D18
AF AMP Q13 Q23 2SC1571 ×2 FM-N
CFY455S 1K60×2
LO AMP Q16 Q17 2SC3355×2
2nd LO
AGC
AGC DET D28 Q18 1K60 2SC2458
SIGNAL CENTER DET IC5
NJM4558D
FRONT REC
REC AMP IC3/2 LA2600
VSC AMP IC2/2 NJM4558D
DC AMP IC4/2 NJM4558D
DC AMP IC4/2
SQL CTRL Q2, 3, 4, 6 2SC2785 2SA1348×2 2SC3399
SCAN CTRL Q10, Q11 2SC2785 2SA1048
TO LOGIC MATRIX
SQL VOL
AF GAIN
AF POWER AMP IC8 µPC1241
E.V.C. IC3/2 LA2600
VSC TO LOGIC MATRIX
AMP IC 1/2
NJM4558D LPF IC1/2
SQL SW Q1 2SK30
MAIN UNIT
DISPLAY UNIT IC1, IC2
DISPLAY DS1
DISPLAY CONTROL µPD549C×2
OPTION (VOICE SYNTHESIZER)
OPTION (REMOTE CONTROLLER)
LOGIC UNIT
IC7 CPU HD63A01V1D26P
P40 ~ P47
8 Bit
CTL
P30 ~ P37
8 Bit
A4
A5
CS
WR
P14
P15
P23
P24
IRQ1
MODE DATA (TO IF UNIT)
BAND DATA (TO RF UNIT)
VCO DATA (TO PLL UNIT)
6 Bit
I/O EXPANDER IC9, IC10 µPD82C43C×2
MATRIX SWITCH IC4, IC6 µPD4081BC×2
INPUT MATRIX (FRONT UNIT)
IC8 RAM µPD446C
IC2 µPD4069UBC Q2, Q3 2SC2458×2
IC4 µPD4081BC IC5 µPD4011BC
REMOTE (CI-V)
MAIN DIAL
OSC Q24 2SC383
X2 51.2MHz
D/A

4-1 RECEIVER CIRCUITS

4-1-1 CONVERTER CIRCUIT (MAIN UNIT)

Input signals from the ANTENNA CONNECTOR are switched by RF relays RL3 and RL4 on the MAIN UNIT either to through or to the converter circuit according to receive frequency.

When the receive frequency is 1025~1999.9999 MHz, receive signals are applied to the converter circuit for heterodyning. This circuit converts 1025~1999.9999 MHz receive signals to 25~999.9999 MHz.

A HPF consisting of L9 and C87~C89 attenuates strong interfering signals in the 200 MHz band.

When the receive frequency is higher than 1025 MHz, signals from the ANTENNA CONNECTOR are applied to the HPF UNIT. This unit consists of a HPF and an RF amplifier. The HPF consists of a strip line, C1~C6, C8 and C10~C16. The HPF attenuates signals with frequencies below 1200 MHz and prevents LO signals (1 GHz) from leaking through the ANTENNA CONNECTOR. Q1 is an RF amplifier and has a gain of approximately 10 dB at 1200 MHz.

X1 and Q14 oscillate a frequency of 55.555 MHz. Output from Q14 is multiplied by three at L3~L5, C31, C44 and C46 to form a frequency of 166.66 MHz. The 166.66 MHz frequency is amplified by Q15. Output from Q15 is multiplied by three at Q16 to form a frequency of 500 MHz, and then the 500 MHz signal (0 dBm) is applied to the MAIN DOUBLER UNIT.

In the MAIN DOUBLER UNIT, output from Q16 on the MAIN UNIT is multiplied by two at Q1 to form a LO signal (1000 MHz, 10 dBm) for the double balanced mixer IC9.

4-1-2 20 dB ATTENUATOR CIRCUIT (RF UNIT)

Receive signals from the MAIN UNIT are applied to a BPF consisting of a strip line, L3 and C1~C6. This circuit attenuates signals that exit the passband of the BPF.

IC5 switches receive signals through or to the attenuator.

The attenuator consisting of R2~R8 provides attenuation of approximately 20 dB.

4-1-3 RF AMPLIFIER CIRCUIT (RF UNIT)

Receive signals are switched by diodes D5, D11, D12, D18, D19 and D25 to each RF amplifier. With frequencies higher than 512 MHz, RF relays RL1 and RL2 are used for the switching.

Receive signals of 25~999.9999 or 1025~1999.9999 MHz are quadrisected as indicated in Table 1, and then each signal is applied to the RF amplifiers.

Each tuned amplifier has approximately 10 dB gain.

Table 1 shows the relation among receive frequencies (F_{RX}) and RF amplifiers.

RECEIVE FREQUENCY F_{RX} [MHz]	RF AMPLIFIER
25~ 89.9999 1025~1089.9999	BPF1 (Q1)
90~ 249.9999 1090~1249.9999	BPF2 (Q2)
250~ 519.9999 1250~1519.9999	BPF3 (Q3)
512~ 999.9999 1512~1999.9999	BPF4 (Q4)

Table 1

(a) BPF1

Receive signals via D5 are fed to parallel resonance circuit D6, L11 and C15 to attenuate interference signals which frequencies are half of receive frequencies.

Receive signals via D6, L11 and C15 are then applied to the RF amplifier. The input tuning circuit of the RF amplifier is composed of varicaps D7, D8 and L12~L14. The output tuning circuit is composed of varicaps D9, D10 and L16~L18.

These circuits are tuned by the tuning voltage from IC1(A). In addition, D50 prevents varicaps from being charged over their maximum rated voltage.

(b) BPF2

Receive signals via D12 are fed to a parallel resonance circuit consisting of D13, L22 and C25. The circuit attenuates the interference signals which frequencies are half of receive frequencies.

A series-paralled resonance circuit is composed of varicap D14, L70 and C61. The circuit attenuates strong signals of FM and TV broadcasts in a frequency range of 80~110 MHz.

The input tuning circuit of the RF amplifier is composed of Q4, varicap D15, L23~L25 and C119. The output tuning circuit is composed of D17, L27~L29 and C120.

These tuning circuits are tuned by the tuning voltage from IC1(B). In addition, D51 protects varicap from being negatively charged.

(c) BPF3
Receive signals via D19 are fed to a HPF consisting of L32, L69, C34, C35, C51 and C133. The cut-off frequency of the HPF is 240MHz.

The receive signals are then input to the RF amplifier. The input tuning circuit of the RF amplifier (Q3) is composed of D21, D22, L33 and L34. The output tuning circuit is composed of D23, D24, L36 and L37.

These circuits are tuned by the tuning voltage from IC2(A).

(d) BPF4
Receive signals via RL1 are fed to the parallel resonance circuit consisting of varicap D26, L39 and C45. The circuits attenuate interference signals to half of the receive frequency.

Input and output tuning circuits of the RF amplifer are composed of a strip line and varicaps D27~D30. By utilizing the strip line, stable operations are maintained at high frequencies.

These circuits are tuned by the tuning voltage from IC2(B).

4-1-4 RF AMPLIFIER (RF UNIT)
Signals from BPF are then applied to wide frequency band amplifier Q7 with a gain of approximately 10dB.

4-1-5 LO TRAP (TUNED NOTCH) CIRCUIT (RF UNIT)
The LO trap circuit consisting of a strip line and D31~D34 prevents the 1st LO signal leakage to the ANTENNA CONNECTOR.

The notch frequency is controlled by a control voltage from IC3(B), matching the 1st LO frequency.

A LPF consisting of a strip line and C78, C82, C89 and C137 attenuates higher harmonics of the 1st LO signal.

4-1-6 1_{ST} LO AND 1_{ST} MIXER CIRCUITS (RF UNIT)
A BPF consisting of a strip line, L78, C134, C59, C77 and C53~C55 attenuates unnecessary signals from the PLL UNIT.

Table 2 shows the relation among receive frequencies (F_{RX}) and 1st LO frequencies ($F_{1st\,LO}$).

RECEIVE FREQUENCY F_{RX} [MHz]	1st LO FREQUENCY $F_{1st\,LO}$ [MHz]
25~ 89.9999 1025~1089.9999	803.7~ 868.6999
90~ 249.9999 1090~1249.9999	868.7~1028.6999
250~ 519.9999 1250~1519.9999	1028.7~1290.6999
512~ 999.9999 1512~1999.9999	778.7~1266.6999

Table 2

Q5 and Q6 amplify the 1st LO signal from the PLL UNIT to approximately 10dBm. The output of Q6 is applied to IC6.

A DBM (double-balanced mixer) IC6 converts receive signals to 1st IF (778.7MHz or 266.7MHz) signals.

4-1-7 1_{ST} IF CIRCUIT (RF UNIT)
(a) 1st IF AMPLIFIER
1st IF signals from IC6 are amplified at Q8 and they are applied to FI1 or FI2.

Table 3 shows the relation among receive frequencies (F_{RX}) and 1st IF frequencies ($F_{1st\,IF}$).

RECEIVE FREQUENCY F_{RX} [MHz]	1st IF $F_{1st\,IF}$ [MHz]
25~ 89.9999 1025~1089.9999	778.7 (FI1)
90~ 249.9999 1090~1249.9999	778.7 (FI1)
250~ 519.9999 1250~1519.9999	778.7 (FI1)
512~ 999.9999 1512~1999.9999	266.7 (FI2)

Table 3

(b) FI1 CIRCUIT
The FI1 circuit is a BPF with a center frequency of the passband at 778.7MHz and a pass-bandwidth of 5MHz. The image interference signal (757.3MHz) is attenuated by a notch filter consisting of L51, and C79.

(c) FI2 CIRCUIT
The FI2 circuit is a BPF with a center frequency of the passband at 266.7MHz and a pass-bandwidth of 5MHz. The image interference signal (245.3MHz) is attenuated by a notch filter consisting of L67, L68, and C88. Series resonance circuits consisting of L73, C86, L74, and C90 sufficiently attenuate off-band signals.

1st IF signals from the FI1 or FI2 circuits pass through a LPF consisting of a strip line and C139~C141. 1st IF signals are then fed to IC7.

4-1-8 2_{ND} MIXER CIRCUIT (RF UNIT)
The 2nd LO signal (256MHz or 768MHz) from the PLL UNIT is fed to a LPF consisting of a strip line, C104, C105, and C146. The 2nd LO signal is amplified by Q16 and Q17 to approximately 10dBm, and is then fed to a 3dB attenuater (ATT) consisting of R116~R118.

Table 4 shows the relation among receive frequencies (F_{RX}) and 2nd LO frequencies ($F_{2nd\,LO}$).

RECEIVE FREQUENCY F_{RX} [MHz]	2nd LO FREQUENCY $F_{2nd\ LO}$ [MHz]
25~ 89.9999 1025~1089.9999	768
90~ 249.9999 1090~1249.9999	768
250~ 519.9999 1250~1519.9999	768
512~ 999.9999 1512~1999.9999	256

Table 4

A double-balanced mixer IC7 converts 1st IF signals to 2nd IF (10.7MHz) signals.

A LPF consisting of C142~C144 attenuates higher harmonics of 2nd LO signal from IC7. Q18 amplifies 2nd IF signals from IC7, and the output of Q18 is fed to the IF UNIT.

A part of 2nd IF signals from IC7 is buffer-amplified at Q19, then is applied to a LPF consisting of L60 and C114~C116. These signals are then fed to the [10.7MHz IF OUTPUT] JACK.

4-1-9 TUNED CONTROL CIRCUIT (RF UNIT)

This circuit converts the lock voltage from the PLL UNIT to tuned voltages for the LO trap (tuned notch) circuit and BPF1~BPF4.

Fig. 1 shows the relation among receive frequencies, the control voltage, the tuned voltage for BPFs and the tuned voltage for the LO trap circuit.

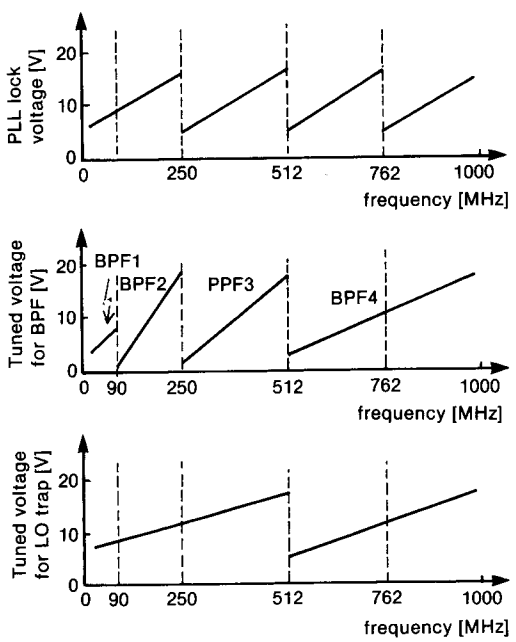

Fig. 1

IC3(A) DC-amplifies the CV from the PLL UNIT, and IC3(A) supplies IC1(A), IC1(B), IC2(A), and IC2(B) with control voltage.

IC1(A) supplies BPF1 with a tuned voltage. The gain and offset voltage of IC1(A) are controlled by R68 and R66, respectively.

IC1(B) supplies BPF2 with a tuned voltage. D53 and R157 adjust the gain of IC1(B) to fit the characteristics of BPF2.

IC2(A) supplies BPF3 with a tuned voltage.

IC2(B) supplies BPF4 with a tuned voltage. The gain and offset voltage of IC2(B) are switched by Q9 and Q10, respectively, to convert the variations of two PLL lock voltages to a continuous tuned voltage.

IC3(B) supplies a tuned voltage with the LO trap (tuned notch) circuit. The offset voltages of IC3(B) are switched by Q11 to convert the variations of two PLL lock voltages to a continuous tuned voltage.

4-1-10 POWER SOURCE SWITCHING CIRCUIT (RF UNIT)

IC5 switches the power source of each RF amplifier and attenuators by signals from the LOGIC UNIT.

Q21 and D52 are voltage converters and regulators of the power source for IC5.

An inverter circuit consisting of Q12 and R106 reverses ATT signals from the LOGIC UNIT to make THROUGH signal.

Q14 and Q15 are power source switches for RF relays RL1 and RL2. Q14 and Q15 turn ON via BPF4 signals.

BPF4 signals control IC4, and IC4 outputs positive voltage to pin 7 (when the receive frequency is 25~511.9999 or 1025~151.9999MHz) or pin 1 (when the receive frequency is 512~999.9999 or 1512~1999.9999MHz).

4-1-11 AGC BUFFER CIRCUIT (RF UNIT)

An AGC voltage buffer Q20 converts AGC voltage variation (4~0V) to the voltage variation that is required for Q1~Q4.

4-1-12 FM (wide) CIRCUIT (IF UNIT)

In FM (wide) mode, 2nd IF signals (10.7MHz) from the RF UNIT are impedance-converted at L1, and fed to FI1. 2nd IF signals from FI1 are amplified at Q2 and IC1. The gain of Q2 and IC1 is approximately 40dB.

2nd IF signals are then applied to IC2, and are limiter amplified and then detected to obtain AF signals.

AF signals from IC2 are applied to buffer amplifier Q4. This circuit switches AF signals and matches the level of AF signals with other modes.

4-1-13 AGC CIRCUIT FOR FM (wide) MODE (IF UNIT)

IC2 (pin 3) generates a voltage corresponding to the signal strength of IF signals. Q30 is a buffer for DC voltage. When IF signals are strong, Q30 turns Q26 ON to cut off the AGC voltage.

When IF signals become stronger the AGC maintains the voltage of IC2 (pin 3) at a constant value.

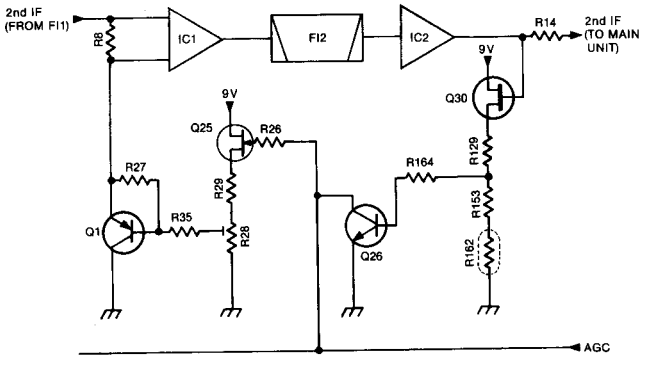

Fig. 2

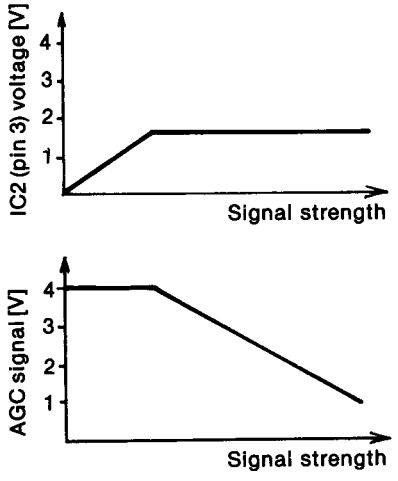

Fig. 3

4-1-14 2_{ND} IF CIRCUIT FOR FM (narrow), SSB AND AM MODES (IF UNIT)

In FM (narrow) mode, SSB mode, or AM mode, 2nd IF signals (10.7MHz) are applied to FI3. FI3 sufficently attenuates unrequired signals. The 2nd IF signals are then amplified at Q5. The gain from L4 to L5 is approximately 28dB.

4-1-15 NOISE BLANKER CIRCUIT (IF UNIT)

Part of the receive signals from Q5 is amplified by IC4 and detected by D32 and D33. AGC detector Q9 controls the gain of IC4 via DC amplifier Q29. The time constant of the noise blanker circuit is determined by R156, R157 and C65. Q10 turns ON or OFF according to the detected pulses. While pulse-type noise is received, Q10 turns Q11 ON. The noise blanker switch consisting of D7 and D9 is reverse-biased, and the 2nd IF signals are cut OFF.

4-1-16 3_{RD} MIXER AND 3_{RD} LO CIRCUIT (IF UNIT)

2nd IF signals from the noise blanker switch are applied to double-balanced mixer IC3. IC3 converts 2nd IF signals (10.7MHz) to 3rd IF (455kHz) signals utilizing 3rd LO signals (10.245MHz) which are oscillated by X2 and Q12.

Output signals from IC3 is impedance-converted by L13 and C25, and is fed to the 3rd IF circuit.

4-1-17 3_{RD} IF CIRCUIT (IF UNIT)

3rd IF (455kHz) signals from the noise blanker switch are then applied to filters corresponding to each mode.

FI4 (pass-bandwidth 15kHz) is a filter for FM (narrow) and AM modes. FI5 (pass-bandwidth 6kHz) is a filter for AM mode. FI6 is a filter for SSB mode. (pass-bandwidth 2.8kHz.) Cermaic filters are used for all of these.

In AM mode, FI4 and FI5 can be selected by J8 on the IF UNIT.

Q6 and Q7 amplify 3rd IF signals. R165 is a thermistor for temperature compensation.

4-1-18 BFO (BEAT FREQUENCY OSCILLATOR) CIRCUIT AND SSB DETECTOR CIRCUIT (IF UNIT)

A BFO (Beat Frequency Oscillator) consists of Q21 and Q22 and supplies to the SSB detector circuit a beat frequency signal.

In LSB mode, Q31 is turned ON by the LSB mode (LSB) signal from the EF UNIT, and the capacitance of C133 and C134 is added to L15, C130, and C119 to shift the oscillation frequency 3kHz up.

Output signal from the 3rd IF circuit and a beat frequency signal from the BFO circuit are applied to the SSB detector circuit consisting of D37~D40. This circuit detects SSB signals.

AF amplifier Q24 switches AF signals from the SSB detector circuit and Q24 matches the level of AF signals with other modes.

4-1-19 FM (narrow) DETECTOR CIRCUIT (IF UNIT)

In FM (narrow) mode, 3rd IF signals from Q7 are applied to Q19, and then are limiter-amplified by IC5 to remove AM components in 3rd IF signals. Ceramic discriminator X3 is used for FM detection to obtain AF signals.

Q13 and Q23 form a deemphasis circuit and a HPF to attenuate low frequency (below 200Hz) components in AF signals.

4-1-20 AM DETECTOR CIRCUIT (IF UNIT)

In AM mode, 3rd IF signals from Q19 are detected at D30. AF signals from D30 are amplified by Q20.

4-1-21 AGC CIRCUIT FOR FM (narrow), SSB AND AM MODES (IF UNIT)

In FM (narrow) mode, SSB mode and AM mode, a part of 3rd IF signals from Q19 are applied to AGC detector circuit D28 to rectify 3rd IF signals. The DC voltage from D28 is DC-amplified at Q18.

In AM mode and SSB mode, Q16 turns Q17 ON and C89 is applied to C91, resulting in a longer time constant than in FM (narrow) mode. The rise (attack) time constant for AGC is determined by C89, C91 and R114, and the fall (delay) time constant is determined by R113.

The AGC voltage (when the IC-R7000 receives no signal) is offset by approximately 4V by R117 and R116.

Q18 supplies IF, RF and MAIN UNITS with the AGC signal.

4-1-22 5kHz NOTCH CIRCUIT (IF UNIT)

AF signals in each mode are fed to a 5kHz notch filter consisting of IC6(A), R167~R172, and C135~C140. This circuit attenuates the 5kHz AF signal generated by leakage of the PLL reference frequency. In this circuit, the Q-factor can be adjusted by R171.

IC6 (A) sends the AF signals to the MAIN UNIT.

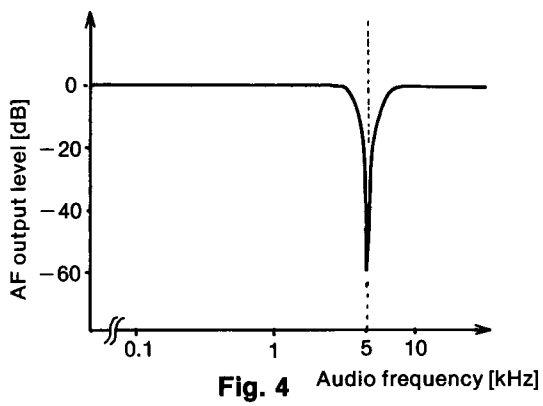

Fig. 4

4-1-23 POWER SUPPLY CIRCUIT (IF UNIT)

Q14 and Q15 switch 9V in FM (wide) mode and other modes. In FM (wide) mode, Q15 is switched ON, while Q14 is switched ON in other modes.

Mode signals from the LOGIC UNIT switch the AF amplifier of each mode and IF filters by the diode matrix composed of D22~D26, D29, D45 and D46.

4-1-24 NOISE SQUELCH CIRCUIT

(IF UNIT)

Noise squelch operates in FM (narrow) mode and AM mode.

A part of AF signals from X3 is fed to active filter IC6(B). The noise components of AF signals pass through the active filter, and are double voltage rectified by D35 and D36. The voltage from D35 and D36 is then charged to C30. The voltage of C30 is fed to the squelch circuit in the MAIN UNIT as squelch voltage (SQLV).

(MAIN UNIT)

Noise voltage from the IF UNIT is DC-amplified at IC7(A). The output of IC7(A) passes through a voltage limiter circuit consisting of D28, D29 and R116, and then enters comparator IC7(B). The reference voltage of IC7(B) is varied by the [SQUELCH] CONTROL, and controls the squelch threshold level.

4-1-25 METER SQUELCH CIRCUIT (MAIN UNIT)

AGC signal from the IF UNIT is applied to IC4(A), and is inversion-amplified. Reference voltage of the meter squelch is varied by the [SQUELCH] CONTROL, and is applied to IC4(B) via Q9 and D19.

The meter squelch is switched ON and OFF depending on the output of the above comparator.

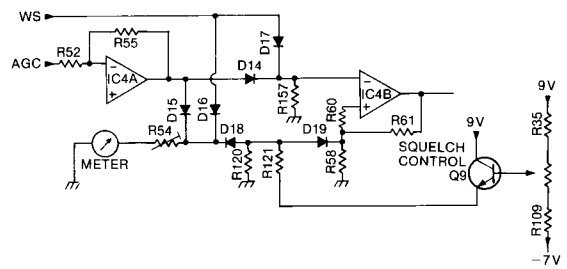

Fig. 5

4-1-26 CENTER DETECTOR CIRCUIT

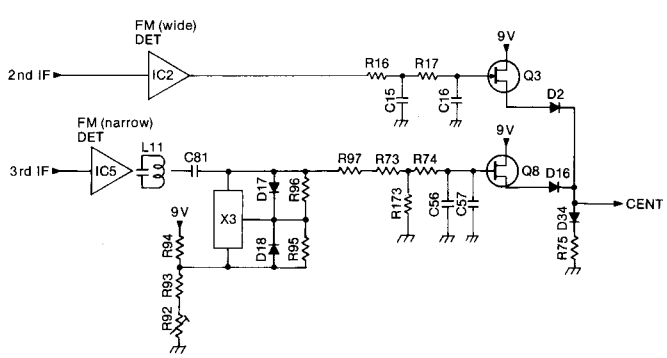

Fig. 6

(IF UNIT)

Output voltage of the FM (wide) and FM (narrow) detector circuits differ from each other in the center frequency of IF signals. Therefore, in FM (narrow) mode the offset voltage is applied to the output of the detector circuit by R92~R94, and is adjusted at R92 to the same output voltage of FM (wide) mode. Q3 and Q8 are DC voltage buffers.

(MAIN UNIT)

CENT signal is applied to a window comparator consisting of IC5(A) and IC5(B). The offset voltage is adjusted at R66 to make the window comparator output 0V when the IC-R7000 receives the center frequency of the signal. IC5(A) and IC5(B) output the STOP signal to the LOGIC UNIT.

4-1-27 SQUELCH SWITCH CIRCUIT (MAIN UNIT)

The base of Q2 receives output voltage from IC7(B) via D27 when the noise squelch is activated, or output voltage from IC4(B) via D20 when the meter squelch is activated. Q2 switches Q3. Q6 turns Q1 (the squelch switch) ON and OFF, and Q1 switches AF signals. The collector voltage of Q3 is applied to the base of Q4. The, and the output of Q4 lights up the "SIG" INDICATOR on the FREQUENCY DISPLAY.

4-1-28 VSC (Voice Scanning Control) CIRCUIT (MAIN UNIT)

This circuit sends the VSC signal to the LOGIC UNIT when the IC-R7000 receives signals with AF signal components.

Output from Q1 is fed to IC1(A). An active low-pass filter consisting of IC1(A), R7~R12, and C6~C10 blocks signals higher than 1kHz to prevent circuit malfunctions. Output from IC1(A) is amplified by IC1(B). D2 detects AF signal components in the output of IC1(B), and then the detected voltage is charged at C15. The voltage of C15 is applied to comparator IC2(A). IC2(A) outputs "HIGH" output to pin 7 only when receiving signals with AF signal components.

Q5 and Q7 control relay RL1 for the [RECORDER-REMOTE] JACK. RL1 turns ON when the squelch opens. VSC operation is given priority even when the squelch opens. When the VSC function is activated, the MO signal form the LOGIC UNIT is applied to Q7, and RL1 turns OFF.

4-1-29 SCANNING CONTROL CIRCUIT (MAIN UNIT)

Output from the center detector circuit and the MUTE signal from the LOGIC UNIT is applied to the base of Q10. Q10 turns OFF only when the CENT signal and MUTE signal is "LOW" (the squelch opens when the receiver is tuned to the center frequency). When Q10 turns OFF, a STOP signal is sent to the LOGIC UNIT via R72 and Q11, and scanning stops.

Q11 switches the STOP signal OFF when the [SQUELCH] CONTROL is turned fully counterclockwise.

4-1-30 METER CIRCUIT (MAIN UNIT)

(a) S-METER CIRCUIT

In FM (wide) mode, the METER receives S-meter (SM) signals via D16 when receiving a strong signal, or SM signals from IC4(A) via D15 when receiving a weak signal.

In FM (narrow), SSB or AM modes, the METER receives SM signals via D18.

(b) CENTER METER CIRCUIT

CENT signal from the IF UNIT is inversion-amplified at IC2(B). Output voltage from IC2(B) is applied to the METER as a center meter (CM) signal.

In SSB mode, Q17 turns the center (CENT) signal from IC5 and the center meter (CM) signal from IC2(B) OFF.

4-1-31 AUDIO FREQUENCY (AF) AMPLIFIER CIRCUIT (MAIN UNIT)

Output from Q1 is applied to IC3(B) (pin 1). The [AF GAIN] CONTROL controls the voltage of IC3(B) (pin 13) to vary the AF gain.

Output from IC3(B) is amplified up to a sufficent AF level by IC8 to drive the speaker SP1.

Output from Q1 is also applied to buffer amplifier IC3(A). Output from IC3(A) is fed to the [RECORDER-REMOTE] JACK.

Q18 amplifies SPK signals from the optional IC-EX310 VOICE SYNTHESIZER UNIT, and signals from Q18 are applied to IC3(B).

4-2 POWER SUPPLY CIRCUITS

4-2-1 REG CIRCUIT (REG UNIT)

The AC power source from the AC POWER SOCKET is fed to T1.

Voltage from T1 is rectified by D1, next it is then fed to the stabilization circuit consising of Q1, Q2, and Q3, and then it is supplied to other circuits.

4-2-2 DC-DC CONVERTER CIRCUIT (DC-DC UNIT)

This circuit converts 13.8V DC from the REG UNIT to −7V, −12V and +24V DC voltage. This circuit consists of a oscillation circuit, a voltage step up/down transformer, and three regulator circuits.

(MAIN UNIT)

RL2 is a power ON/OFF switch operated by the optional RC-12 WIRELESS REMOTE CONTROLLER. The power control (POC) signal from the RC-12 switches Q13 and Q13 switches RL12.

IC6 is a voltage regulator that supplies a stabilized 9V to the MAIN UNIT, IF UNIT and RF UNIT.

4-3 PLL CIRCUIT (PLL UNIT)

This circuit generates the 1st LO signals (778.70~1290.699MHz) for the 1st mixer, and 2nd LO signals (256 or 768MHz) for the 2nd mixer.

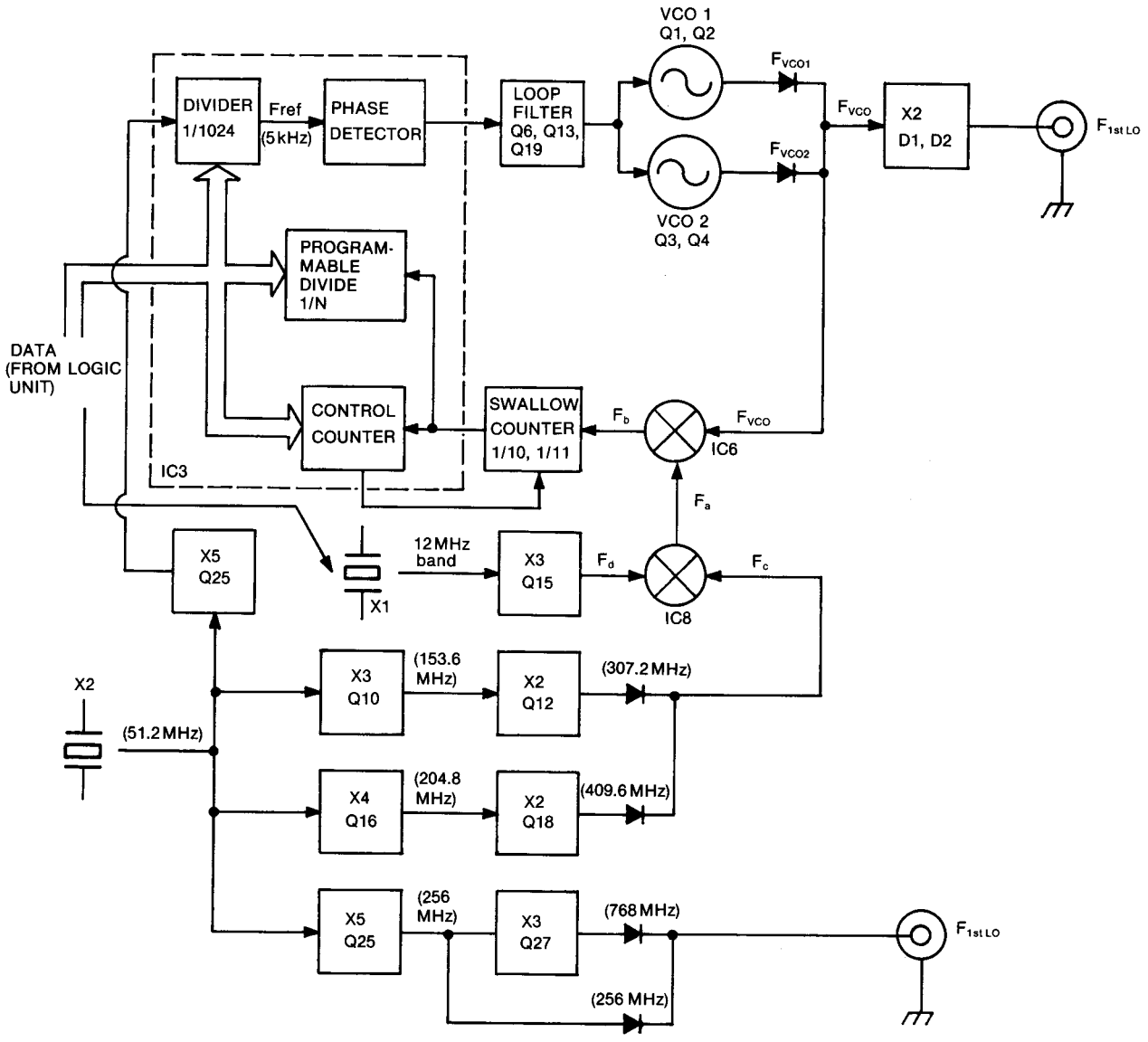

Fig. 7

4-3-1 REFERENCE OSCILLATOR CIRCUIT

This circuit consists of crystal X1 and Q24.

The output (51.2MHz) of Q24 is used to make for the reference frequency of the PLL (Fref), the LO frequency in the PLL loop (Fa), and 2nd LO signal ($F_{2nd\ LO}$).

In addition, the output of Q24 is divided into 1/10 at IC7, and then fed to IC3.

4-3-2 2_{ND} LO CIRCUIT

(a) 256MHz 2nd LO SIGNAL CIRCUIT

The signal from Q24 is multiplied by five at Q25, and passes through L41~L43, Q26, and Q29. Q29 outputs a 2nd LO signal ($F_{2nd\ LO}$=256MHz, 0dBm).

(b) 768MHz 2nd LO SIGNAL CIRCUIT

The signal from Q26 is multiplied by three at Q27, and Q28 outputs the another 2nd LO signal ($F_{2nd\ LO}$ =768MHz, 0dBm).

The band signal (BS) switches the above two kinds of 2nd LO signals according to the receive frequency.

Q20 and Q21 turns OFF according to the MUTE signal when in an unlocked condition or by the BLK signal when in blank memory channel.

4-3-3 PLL LOOP SYSTEM

This circuit generates the 1st LO signal for the RF UNIT.

(a) VCO CIRCUIT

The VCO circuit consists of the λ-resonator circuit with a micro-strip line. This allows for a variable range of 389.35~645.35MHz by two VCOs.

IC3 controls oscillation frequencies of this circuit. The VCO selector (VS) signal switches VCOs according to receive frequencies.

(b) PLL LOOP CIRCUIT

The VCO output is amplified by IC10 and passes through a LPF, Q2 and is multiplied by two at a doubler circuit consisting of D1, D2 and L5. It is fed to the BPF, and then is applied to the MAIN UNIT as a 1st LO signal.

A part of the VCO output signals (Fvco) is amplified by IC5, and is mixed with the LO signal in the PLL loop (Fa) from the VCO UNIT at IC6 for heterodyning. The relation of Fb, Fvco and Fa is as follows:

Fb=Fvco−Fa (See Fig. 7)

The signal from IC6 (Fb) passes through L9, L10, and Q1, and it is fed to IC4. The limiter D5 and D6 prevents excessive signal input.

(c) LO CIRCUIT IN PLL LOOP

When F_{RX} is between 25 and 249.9999MHz or 512 and 761.9999MHz:
The output of X2 (51.2MHz) is multiplied by three at Q10. The signal from Q10 passes through L18~L20, and Q11, and then it is multiplied by two at Q12 to obtain Fc (307.2MHz). The output of Q12 passes through L23 and L25 and then is fed to mixer IC8.

When F_{RX} is between 250 and 511.9999MHz or 762 and 999.9999MHz:
The output of X2 (51.2MHz) is multiplied by four at Q16. The signal from Q16 passes through L31~L33, and Q17 and then is multiplied by two at Q18 to obtain Fc (409.6MHz). The output of Q18 passes through L36 and L38 and then is fed to mixer IC8.

X1 oscillates 12MHz band signals, and the DA signal from the LOGIC UNIT controls oscillation frequencies of X1. Signals from X1 are multiplied by three at Q15 to obtain Fd.

Fd varies between 36 and 36.00495MHz in 50Hz steps. In addition, Fd shifts ±0.75kHz depending on the [USB/LSB] SELECTOR SWITCH. The output of the 1st LO signal ($F_{1st\,LO}$) is obtained by double multiplication, so $F_{1st\,LO}$ shifts ±1.5kHz.

Fd and Fc are mixed at IC8 to obtain Fa (the LO frequency in the PLL loop). The relation of Fa, Fc and Fd is as follows:

Fa=Fc+Fd (See Fig. 7)

4-4 LOGIC CIRCUIT (LOGIC UNIT)

4-4-1 CPU

IC7 (a high-speed 8-bit COMS CPU) controls data such as mode, receive band, VCOs and expanded output ports IC9 and IC10.

The CPU's port addressing is shown in Fig. 9.

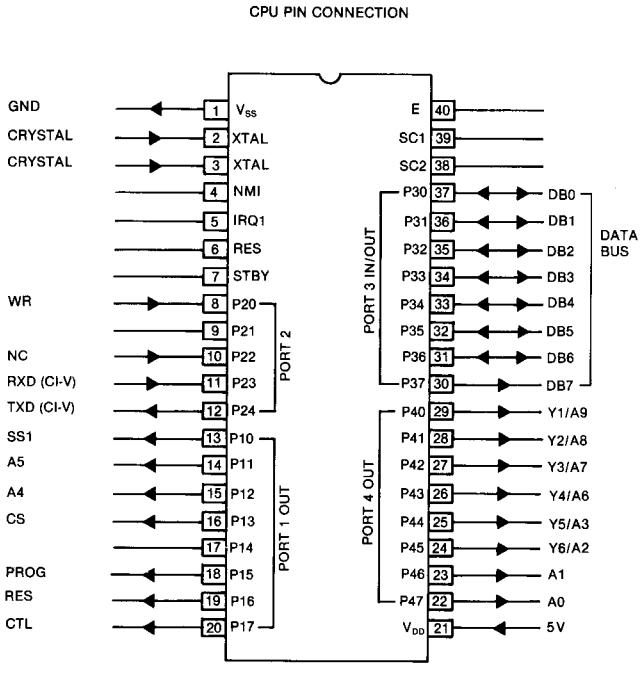

Fig. 8

4-4-2 MATRIX ALLOCATION

The matrix allocation is shown in Fig. 10.

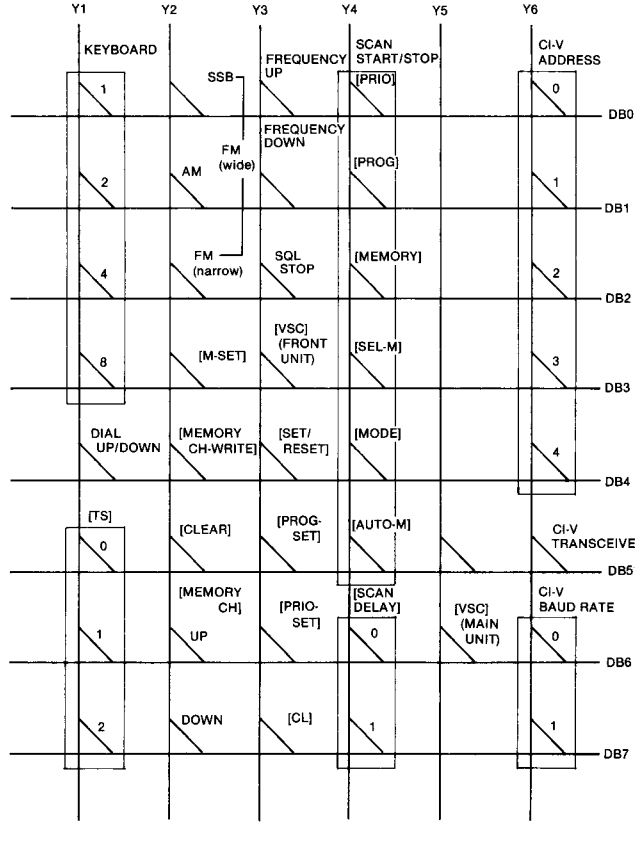

Fig. 9

(a) Y1 → DB0~DB3 (KEYBOARD, MEMORY-CH ENTER)
Following is a matrix for the KEYBOARD, MEMORY-CH ENTER and the optional RC-12 WIRELESS REMOTE CONTROLLER.

KEY \ Y1 →	DB0	DB1	DB2	DB3	HEX CODE
1	H	L	L	L	1
2	L	H	L	L	2
3	H	H	L	L	3
4	L	L	H	L	4
5	H	L	H	L	5
6	L	H	H	L	6
7	H	H	H	L	7
8	L	L	L	H	8
9	H	L	L	H	9
0	L	H	L	H	A
*1 MEMORY CH ENTER	H	H	L	H	B
•	L	L	H	H	C
ENT	H	L	H	H	D
*2 CE	L	H	H	H	E

*1: Used in [MEMORY CH] CONTROL.
*2: Used in the optional RC-12 WIRELESS REMOTE CONTROLLER.

Table 5

(b) Y1 → DB4 (DIAL UP/DOWN)
When a TUNING CONTROL clock signal is input, the following results will occur.

Y1 → DB4	RESULT
H	The receive frequency inceases.
L	The receive frequency decreases.

Table 6

(c) Y1 → DB5~7 [TS]
This matrix sets frequency steps.

TS \ Y1 →	DB5	DB6	DB7
0.1kHz	L	L	L
1kHz	H	L	L
5kHz	L	H	L
10kHz	H	H	L
12.5kHz	L	L	H
25kHz	H	L	H

Table 7

(d) Y3 → DB0~1 (FREQUENCY UP/DOWN)
This matrix increments receive frequencies for the optional RC-12 WIRELESS REMOTE CONTROLLER.

(e) Y3 → DB2 (SQUELCH STOP)
This matrix stops the scan when the squelch opens.

(f) Y4 → DB6~7 [SCAN-DELAY]
This matrix sets the scan delay time.

SETTING \ Y4 →	DB6	DB7
OFF	H	L
5 (seconds)	L	H
15 (seconds)	H	H
∞ (infinity)	L	L

Table 8

(g) Y6 → DB0~4 (CI-V ADDRESS)
This matrix sets the address for the *CI-V. The desired address for IC-R7000 may be 1 to 31 and consists of 5 bits.
*CI-V: ICOM Communication Interface-V.

(h) Y6 → DB5 (CI-V TRANSCEIVE)
This matrix sets the transceive operation for the CI-V.

(i) Y6 → DB6~7 (CI-V BAUD RATE)
This matrix sets the baud rate.

BAUD RATE \ Y6 →	DB6	DB7
76800	L	L
9600	H	L
1200	L	H
300	H	H

Table 9

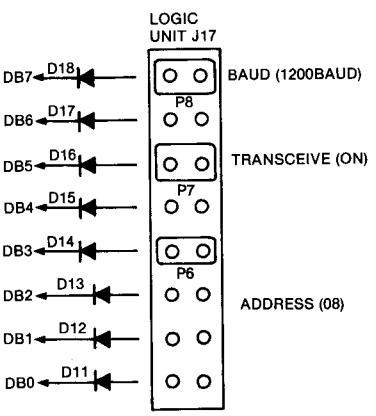

Fig. 10

4-4-3 CPU RESET CIRCUIT
The CPU reset circuit detects the power supply voltage to reset the CPU.

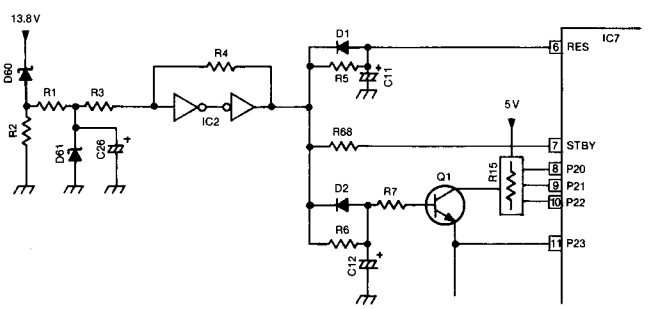

Fig. 11

4-4-4 RECORDING SPEECH CIRCUIT (LOGIC UNIT)

When the STOP signal from the MAIN UNIT is applied to IC3(A), the output of IC3(A) becomes "LOW" for approximately 1sec. from the rise of the STOP signal.

When the [RECORDER-SPEECH] SWITCH is ON, after 1sec. from the rise of the STOP signal (if the VSC signal is "HIGH"), Q5 and Q4 are switched on, and the SPKS signal is output.

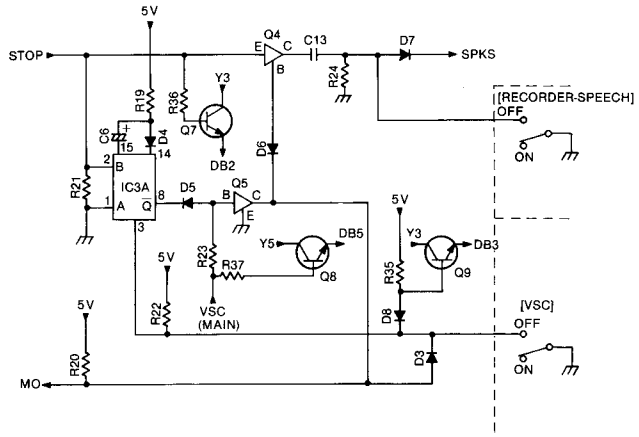

Fig. 12

4-4-5 SCAN SPEED CONTROL CIRCUIT (LOGIC UNIT)

This circuit accelerates the speed of the MEMORY CHANNEL SCAN, SELECTED MODE SCAN and SELECTED MEMORY SCAN.

By the PRIO signal, the output of IC16 remains "HIGH" even while receiving the another frequency.

When Q21 is switched ON by a PRIO or a PRO signal, C7 is input in parallel with C5, and the clock frequency will decrease.

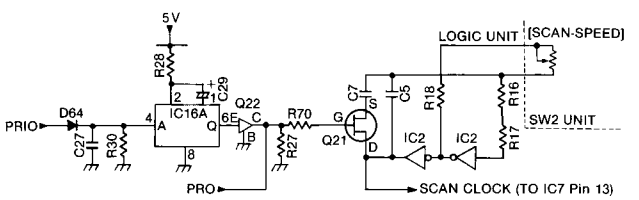

Fig. 13

4-4-6 B1 – B4, BH, BS AND VS SIGNALS

The LOGIC UNIT supplies following signals with the PLL UNIT and RF UNIT.

RECEIVE FREQUENCY F_{RX} [MHz]	SIGNALS						
	B1	B2	B3	B4	BH	BS	VS
25~ 89.9999 1025~1089.9999	H	L	L	L	L	L	H
90~ 249.9999 1090~1249.9999	L	H	L				
250~ 511.9999 1250~1511.9999	L	L	H		H		L
512~ 761.9999 1512~1761.9999	L	L	L	H	L	H	H
762~ 999.9999 1762~1999.9999	L	L	L		H		L

B1~B4, BH: BPF signals
BS: Band signal
VS: VCO selector signal

Table 10

4-5 DISPLAY CIRCUIT (DISPLAY UNIT)

This circuit is consists of a fluorescent display tube DS1, display tube drivers IC1, IC2 and a DC-DC converter circuit.

4-5-1 FREQUENCY DISPLAY CIRCUIT

IC1 drives the display of frequencies while IC2 drives the display of memory channels.

Signals from the LOGIC UNIT and the MAIN UNIT control IC1 and IC2.

4-5-2 MODE DISPLAY CIRCUIT

IC2 allocates T3~T7 for five types of data, and IC2 send the segment data "1" to R19.

EXAMPLE:

The AND circuit of "ℓ" and "T7" is configured with R18 and R19. Q5 and Q10 are switched ON by the timing of "T7" only when "ℓ" is at "HIGH", and then the letter "SCAN" lights up.

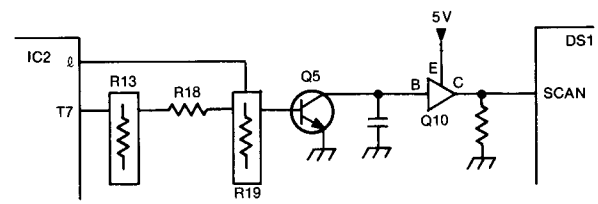

Fig. 14

4-5-3 PRIORITY DETECTOR CIRCUIT

Both the segment "c" and "d" are turned OFF simultaneously only when DS1 displays the letter "P". In this case, IC2 switches Q14 OFF and IC2 sends the T1 signal to the LOGIC UNIT as a PRIO signal.

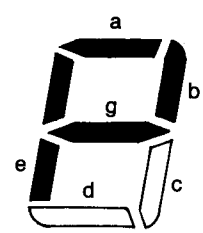

Fig. 15

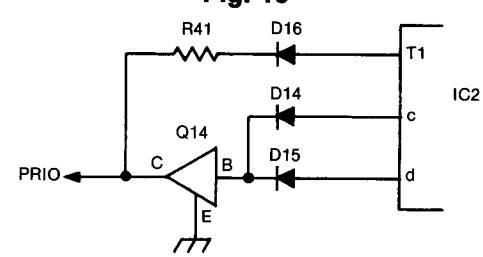

Fig. 16

4-6 KEYBOARD CIRCUIT (KEYBOARD UNIT)

This circuit consists of the keyboard circuit and the remote control circuit.

The signals from photo-diode D28 are amplified by IC1 and Q1. Q1 outputs the remote (REM) signal to the LOGIC UNIT.

5-5 BOTTOM SIDE CONNECTOR CONNECTIONS

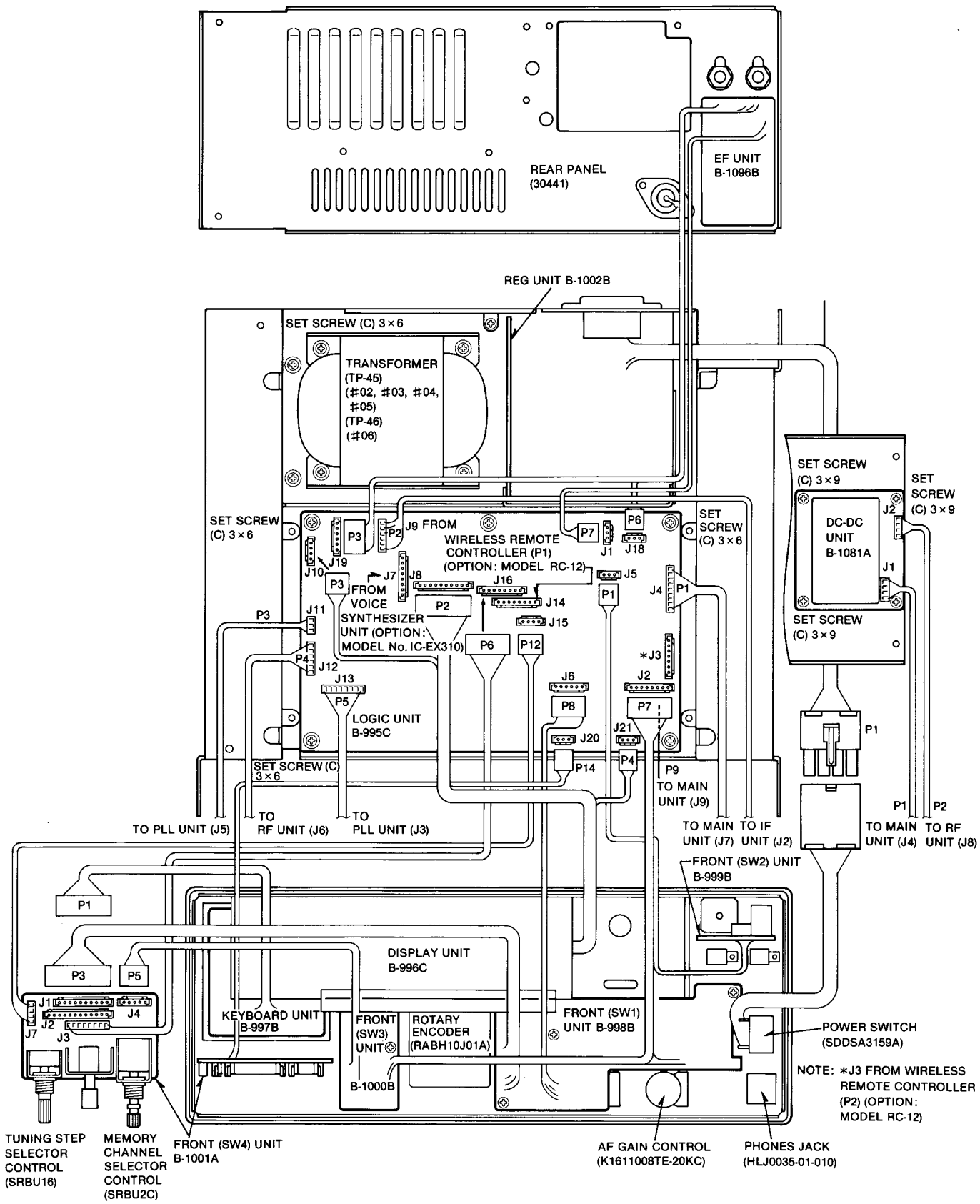

SECTION 6 MAINTENANCE AND ADJUSTMENT

6-1 PREPARATION BEFORE SERVICING

1. Detach the power cable and turn OFF the POWER SWITCH before performing any work on the receiver.
2. DO NOT short circuit components while marking adjustments.
3. Use an insulated tuning tool for all adjustments.
4. DO NOT force any of the variable components. Tune them slowly and smoothly.
5. Follow the instructions exactly. If an indicated result is not obtained, repeat the instruction until the correct result is obtained.
6. Check the condition of connectors, solder joints and screws when adjustments are complete. Comfirm that components do not touch each other.
7. Confirm defective operation of the receiver first when checking an out-of-service unit.
8. Use the correct tools and test equipment.
9. To remove the receiver covers, refer to SECTION 5-1.
10. Re-check for the suspected malfunction with the POWER SWITCH ON.
11. Check the defective circuit. Measure the DC voltages of the collector, base and emitter of each transistor.

6-2 PLL ADJUSTMENT

INSTRUMENTS REQUIRED	CONNECTIONS
(1) FREQUENCY COUNTER • FREQUENCY RANGE : 0.1MHz~1.3GHz • ACCURACY : BETTER THAN ±1ppm • SENSITIVITY : 100mV OR BETTER (2) RF VOLTMETER • MEASURING RANGE : AT LEAST 500MHz (3) OSCILLOSCOPE • FREQUENCY RANGE : DC~50MHz • MEASURING RANGE : 0.01~10V (4) VOLTMETER • INPUT IMPEDANCE : 50kΩ/DC OR BETTER	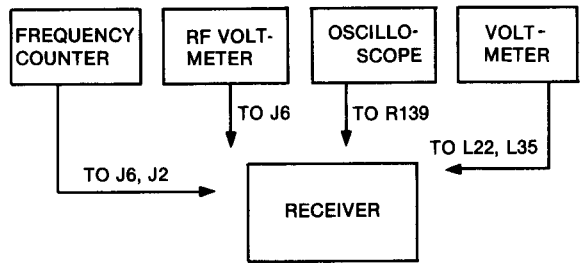

ADJUSTMENT		ADJUSTMENT CONDITIONS	MEASUREMENT		VALUE	ADJUSTMENT POINT	
			UNIT	LOCATION		UNIT	ADJUST
LO (36MHz) OUTPUT LEVEL	1	• Mode: any	PLL	Connect an oscilloscope to R139.	Maximum (More than 100mVp-p)	PLL	L29, L30
MULTIPLIER (Q10, Q11) OUTPUT LEVEL	1	• Display freq.: 249.9999MHz		Connect a voltmeter to L22.	Minimum (5~6V)		L18, L19, L20, L21, L40
MULTIPLIER (Q16, Q18) OUTPUT LEVEL	1	• Display freq.: 250.0000MHz		Connect a voltmeter to L35.	Minimum (5~6V)		L31, L32, L33, L34
2nd LO OUTPUT LEVEL	1	• Display freq.: 512.0000MHz		Connect a spectrum analyzer or RF voltmeter to J6.	Maximum (Approx. 0dBm/0.22V)		L41, L42, L43, L44, L49
	2	• Display freq.: 511.9999MHz					L46, L48
	NOTE: If measured value is not within −2dBm~+3dBm (0.18V~0.32V), repeat steps 1 and 2.						
2nd LO OUTPUT FREQUENCY	1	• Display freq.: 511.9999MHz	PLL	Connect a frequency counter to J6.	768.0000MHz	PLL	L39
	2	• Display freq.: 512.0000MHz			256.0000MHz		Verify
1st LO OUTPUT FREQUENCY	1	• Mode: FM • Display freq.: 145.0000MHz		Connect a frequency counter to J2.	923.7000MHz		R58
	2	• Display freq.: 149.9999MHz			923.6999MHz		R49
	NOTE: Repeat steps 1 and 2.						
	3	• Mode: SSB • USB/LSB SELECTOR SWITCH: LSB • Display freq.: 145.0000MHz	PLL	Connect a frequency counter to J2.	923.6985MHz	PLL	R22
	4	• USB/LSB SELECTOR SWITCH: USB • Display freq.: 145.0000MHz			923.7015MHz		R21

PLL UNIT

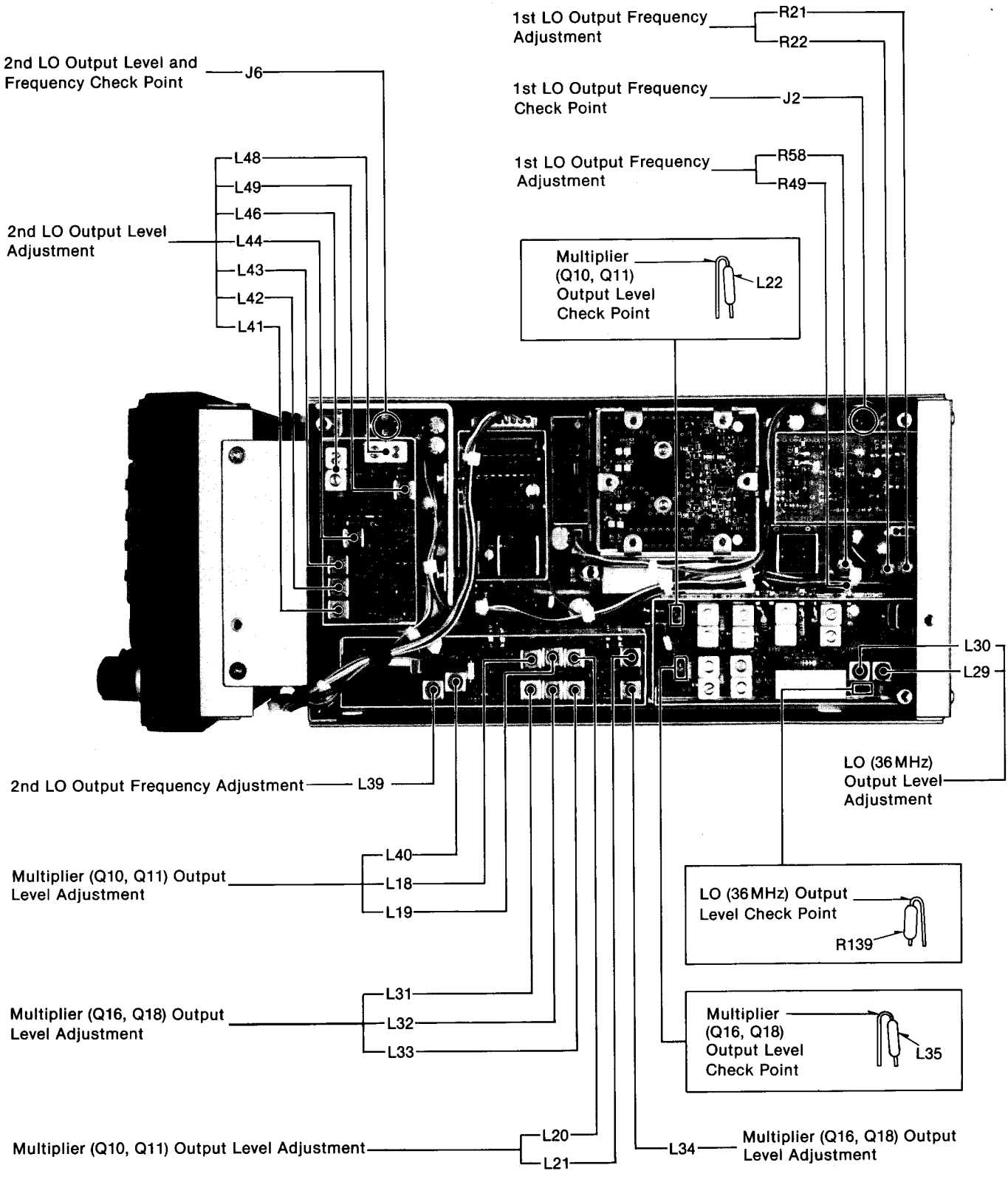
1st LO Output Frequency Adjustment
R21
R22
2nd LO Output Level and Frequency Check Point
J6
1st LO Output Frequency Check Point
J2
1st LO Output Frequency Adjustment
R58
R49
L48
L49
L46
2nd LO Output Level Adjustment
L44
L43
L42
L41
Multiplier (Q10, Q11) Output Level Check Point
L22
L30
L29
LO (36MHz) Output Level Adjustment
2nd LO Output Frequency Adjustment
L39
L40
Multiplier (Q10, Q11) Output Level Adjustment
L18
L19
LO (36MHz) Output Level Check Point
R139
L31
Multiplier (Q16, Q18) Output Level Adjustment
L32
L33
Multiplier (Q16, Q18) Output Level Check Point
L35
Multiplier (Q10, Q11) Output Level Adjustment
L20
L21
L34
Multiplier (Q16, Q18) Output Level Adjustment

6-3 LOCAL OSCILLATOR ADJUSTMENT

INSTRUMENTS REQUIRED	CONNECTIONS
(1) FREQUENCY COUNTER • FREQUENCY RANGE : 0.1MHz~1.3GHz • ACCURACY : BETTER THAN ±1ppm • SENSITIVITY : 100mV OR BETTER (2) RF VOLTMETER • FREQUENCY RANGE : AT LEAST 500MHz • MEASURING RANGE : 0.01~10V	FREQUENCY COUNTER → TO R154 (IF UNIT), W22 (IF UNIT), OUTPUT TERMINAL (DOUBLER UNIT) RF VOLT-METER → TO C1 (DOUBLER UNIT), OUTPUT TERMINAL (DOUBLER UNIT) RECEIVER

ADJUSTMENT		ADJUSTMENT CONDITIONS	MEASUREMENT		VALUE	ADJUSTMENT POINT	
			UNIT	LOCATION		UNIT	ADJUST
3rd LO OUTPUT FREQUENCY (IF UNIT)	1	• Mode: SSB	IF	Connect a frequency counter to R154.	10.2450MHz	IF	C71
	2	• Mode: SSB • USB/LSB SELECTOR SWITCH: USB		Connect a frequency counter to W22.	456.5kHz		L15
	3	• Mode: SSB • USB/LSB SELECTOR SWITCH: LSB			453.5kHz		C134
MULTIPLIER (Q14, Q16) OUTPUT LEVEL (MAIN UNIT)	1	• 1GHz BAND SWITCH: ON	DOUBLER	Connect a spectrum analyzer or RF voltmeter to C1.	Maximum	MAIN	L3, L4, L5, L6, L8
DOUBLER OUTPUT LEVEL (DOUBLER UNIT)	1	• 1GHz BAND SWITCH: ON		Connect a spectrum analyzer or RF voltmeter to output terminal (W1) of DOUBLER UNIT.	Maximum	MAIN	L3, L4, L5, L6, L8
						DOUBLER	C4, C5, C6
DOUBLER OUTPUT FREQUENCY (MAIN UNIT)	1	• 1GHz BAND SWITCH: ON		Connect a frequency counter to output terminal (W1) of DOUBLER UNIT.	1GHz	MAIN	L2

MAIN AND DOUBLER UNITS

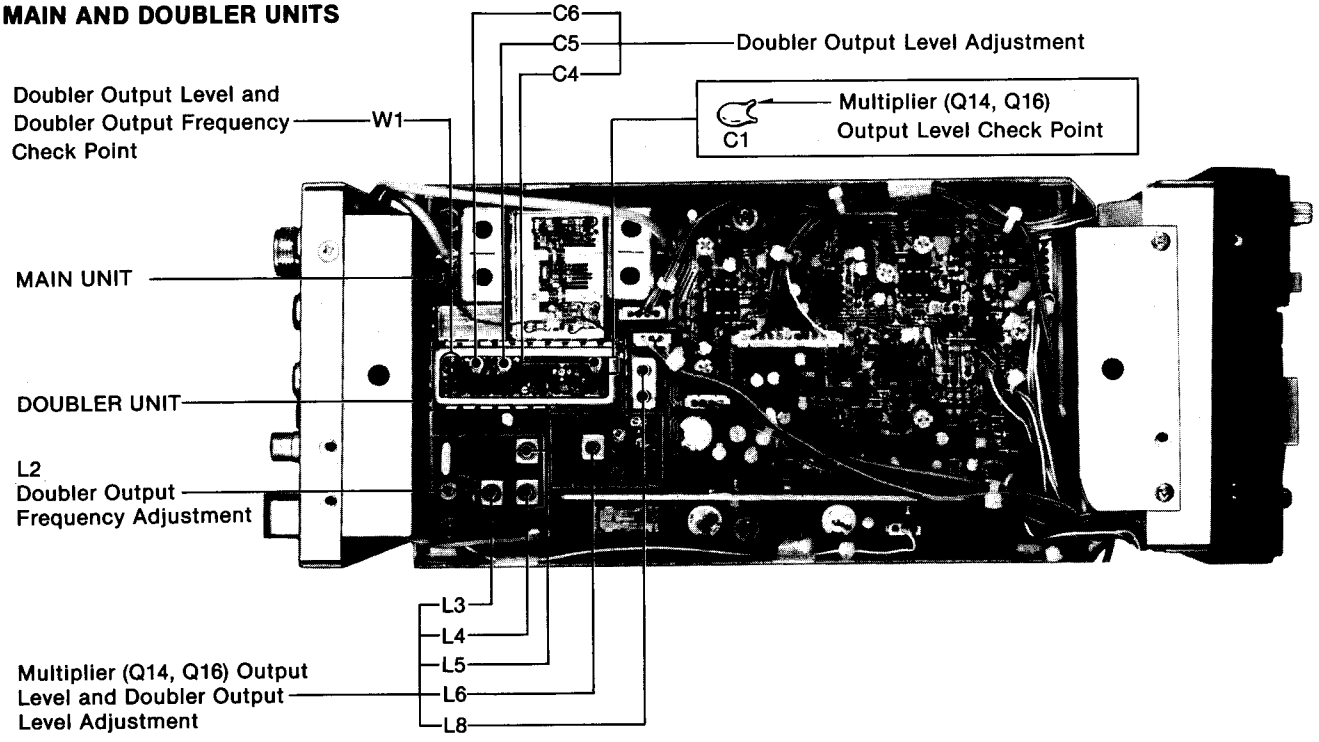

IF UNIT

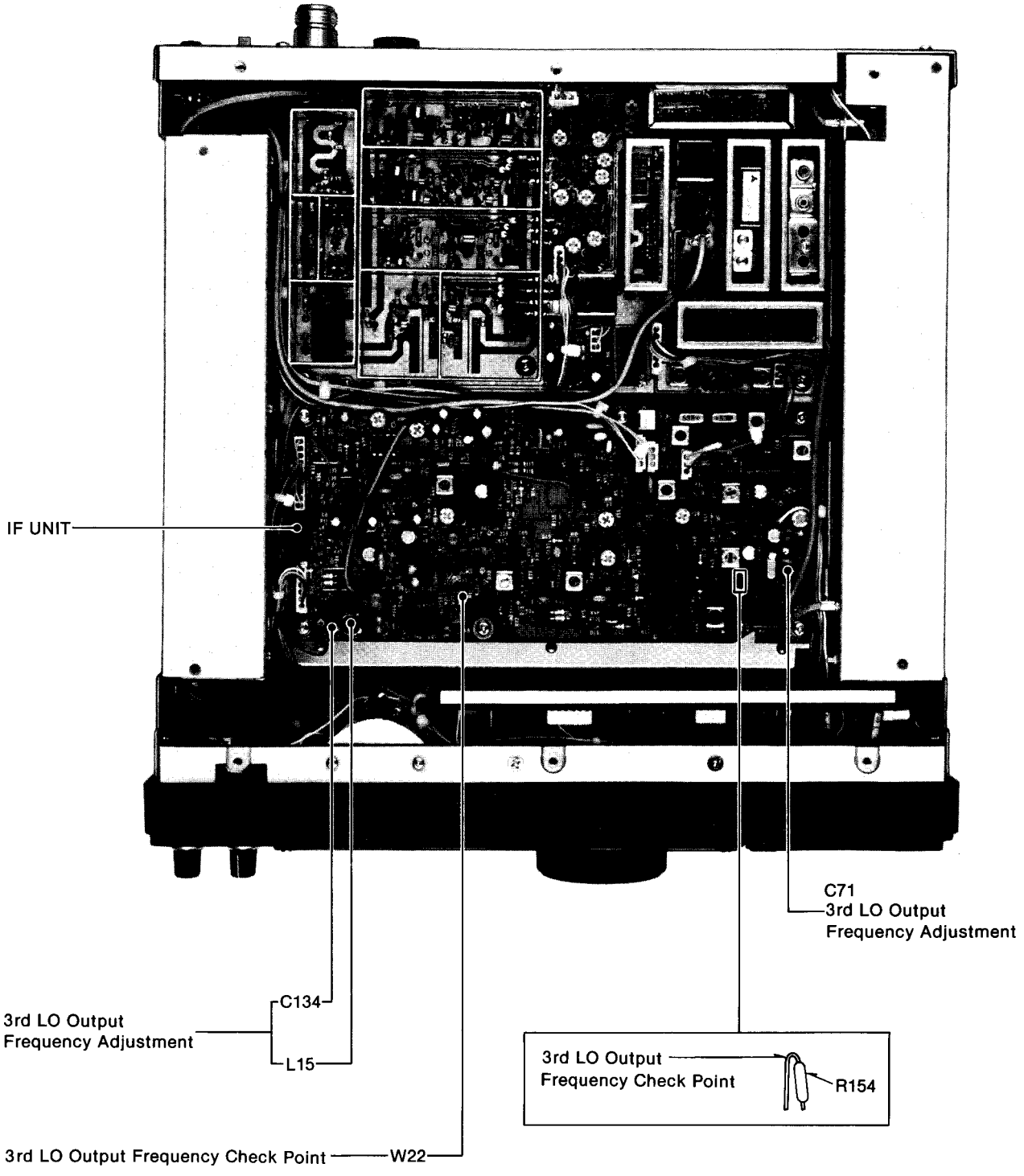
IF UNIT
C71
3rd LO Output
Frequency Adjustment
C134
3rd LO Output
Frequency Adjustment
L15
3rd LO Output
Frequency Check Point
R154
3rd LO Output Frequency Check Point
W22

6-4 RECEIVER ADJUSTMENT

INSTRUMENTS REQUIRED	CONNECTIONS
(1) VOLTMETER • INPUT IMPEDANCE : 50kΩ/V DC OR BETTER (2) SIGNAL GENERATOR (SSG) • FREQUENCY RANGE : 0.1MHz~1GHz • OUTPUT VOLTAGE : 0.1μV~32mV (−127dBm~−17dBm) (3) AC MILLIVOLTMETER • MEASURING RANGE : 10mV~10V (4) EXTERNAL SPEAKER • IMPEDANCE : 8Ω (5) OSCILLOSCOPE • FREQUENCY RANGE : DC~20MHz • MEASURING RANGE : 0.01~10V	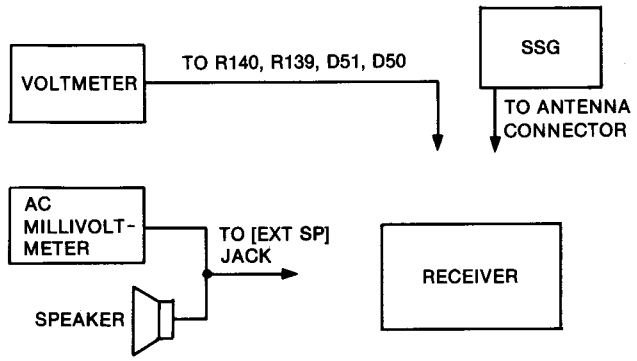

ADJUSTMENT		ADJUSTMENT CONDITIONS	MEASUREMENT		VALUE	ADJUSTMENT POINT	
			UNIT	LOCATION		UNIT	ADJUST
BPF TRACKING	1	• Display freq.: 850.0000MHz	RF	Connect a voltmeter to R140.	12V	RF	R90
	2	• Display freq.: 999.0000MHz			Approx. 17V		Verify
	3	• Display freq.: 762.0000MHz			Approx. 9.5V		
	4	• Display freq.: 650.0000MHz			6.5V		R89
	5	• Display freq.: 761.0000MHz			Approx. 9.5V		Verify
	6	• Display freq.: 513.0000MHz			Approx. 3.5V		
	7	• Display freq.: 350.0000MHz • R77 (RF UNIT): Center	RF	Connect a voltmeter to R139.	7.5V	RF	R79
	8	• Display freq.: 511.0000MHz			Approx. 17.5V		Verify
	9	• Display freq.: 250.0000MHz			Approx. 2.2V		
	10	• Display freq.: 150.0000MHz	RF	Connect a voltmeter to D51.	8V	RF	R71
	11	• Display freq.: 90.0000MHz			1V		R73
	12	• Display freq.: 249.0000MHz			Approx. 17.5V		Verify
	NOTE: Repeat steps 10, 11 and 12 several times.						
	13	• Display freq.: 55.0000MHz • R66 (RF UNIT): Center	RF	Connect a voltmeter to D50.	6V	RF	R68
	14	• Display freq.: 89.0000MHz			Approx. 9.5V		Verify
	15	• Display freq.: 25.0000MHz			Approx. 3V		
IF GAIN	1	• Display freq.: 762.0000MHz • Mode: FM (narrow) • Apply RF signal to ANTENNA CONNECTOR. Level: 5.0μV (−93dBm) Dev.: ±3.5kHz Mod.: 1kHz	FRONT PANEL	METER	Maximum	RF	L57, L58
	2					IF	L4, L14, L5, L6, L7, L8
	3		REAR PANEL	Connect an AC millivoltmeter to [EXT SP] JACK with an 8Ω speaker.	Maximum		L11
	NOTE: To prevent noise blanker circuit malfunction, set the core positions of L5 and L6 to equal each other.						
FM (wide)	1	• Display freq.: 762.0000MHz • Mode: FM (wide) • Apply RF signal to ANTENNA CONNECTOR. Level: 5.0μV (−93dBm) Dev.: ±3.5kHz Mod.: 1kHz	FRONT PANEL	METER	Maximum	IF	L1

RF AND IF UNITS

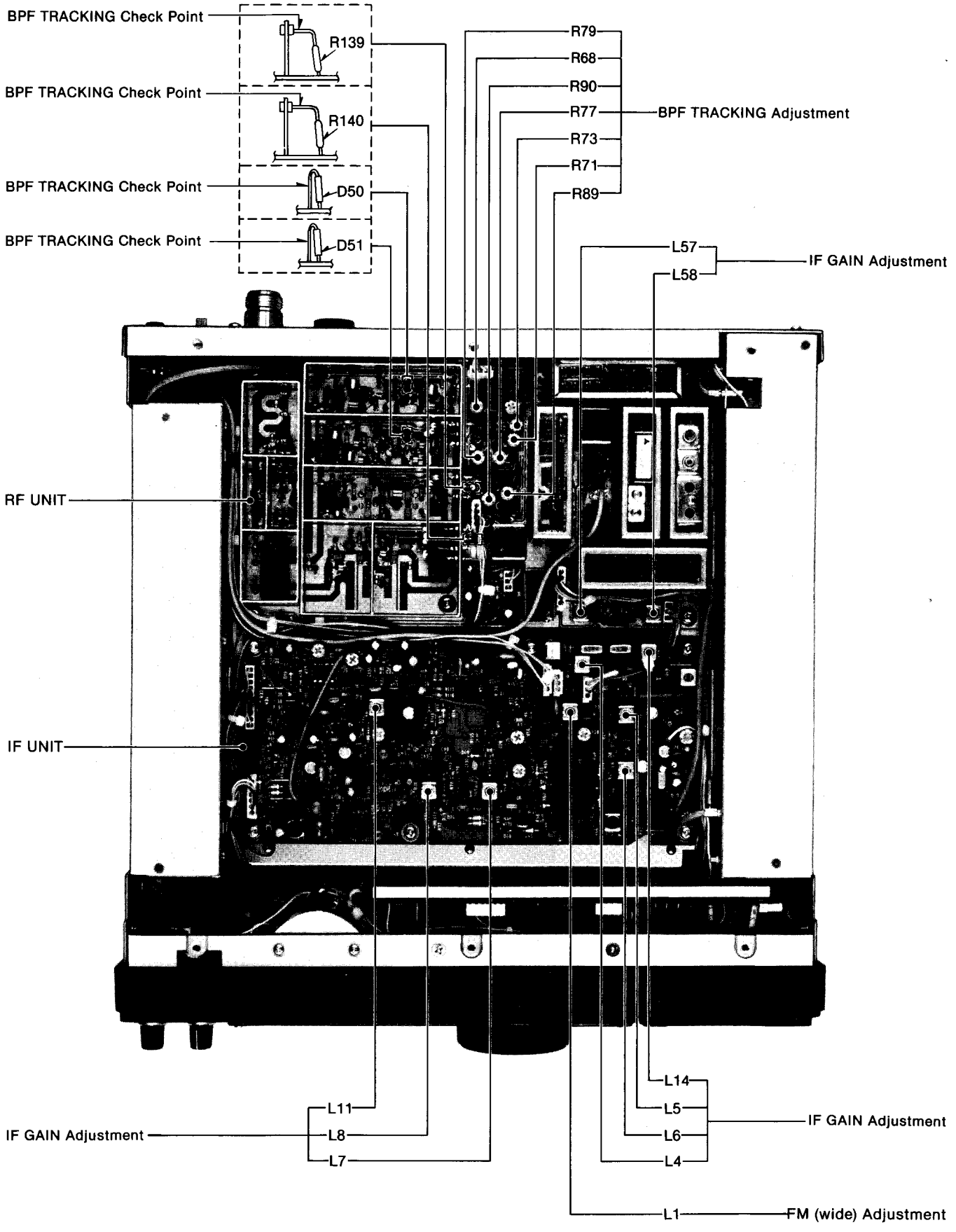

RECEIVER ADJUSTMENT (Continued)

CONNECTIONS

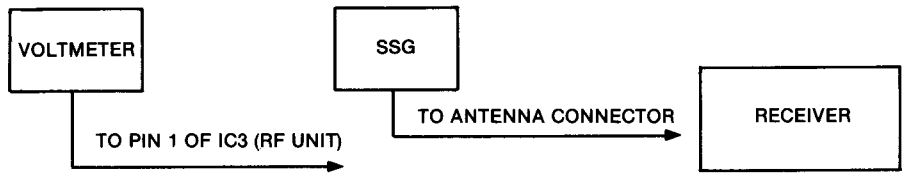

ADJUSTMENT		ADJUSTMENT CONDITIONS	MEASUREMENT		VALUE	ADJUSTMENT POINT	
			UNIT	LOCATION		UNIT	ADJUST
1st IF MIXER	1	• Display freq.: 250.0000MHz	RF	Connect a voltmeter to pin 1 of IC3.	9V	RF	R105
	2	• Display freq.: 249.0000MHz			9V		R104
	3	• Display freq.: 25.0000MHz			4~5V		Verify
	4	• Display freq.: 511.0000MHz			More than 14V		
RF TRAP	1	• Display freq.: 800.0000MHz • Mode: FM (narrow) • Apply RF signal to ANTENNA CONNECTOR. Level: 32μV (−77dBm) Dev.: ±3.5kHz Mod.: 1kHz Freq.: 800.0000MHz	FRONT PANEL	METER	Maximum	RF	L46, L47
	2	• Display freq.: 800.0000MHz • Mode: FM (narrow) • Apply RF signal to ANTENNA CONNECTOR. Level: 100mV (−7dBm) Dev.: ±3.5kHz Mod.: 1kHz Freq.: 800.0000MHz			S9+60dB		Verify
		• Display freq.: 778.6000MHz • RF signal freq.: 800.0000MHz			Less than S5		L67, L68
	3	• Display freq.: 400.0000MHz • Mode: FM (narrow) • Apply RF signal to ANTENNA CONNECTOR. Level: 100mV (−7dBm) Dev.: ±3.5kHz Mod.: 1kHz Freq.: 400.0000MHz			S9+60dB		Verify
		• Display freq.: 378.6000MHz • RF signal freq.: 400.0000MHz			Less than S5		L51
SQUELCH	1	• Display freq.: 762.0000MHz • Mode: FM (narrow) • SQUELCH CONTROL: 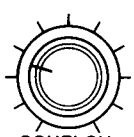 SQUELCH			Squelch closes.	MAIN	R37
S-METER • FM (narrow)	1	• Display freq.: 762.0000MHz • Mode: FM (narrow) • R80 (IF UNIT): Center • Apply RF signal to ANTENNA CONNECTOR. Level: 100mV (−7dBm) Dev.: ±3.5kHz	FRONT PANEL	METER	S9+60dB	MAIN	R54
	2	• RF signal level: 0.1mV (−67dBm)			S9		R51
	3	• RF signal level: 1μV (−107dBm)			S1~S3		Verify

RECEIVER ADJUSTMENT (Continued)

ADJUSTMENT		ADJUSTMENT CONDITIONS	MEASUREMENT		VALUE	ADJUSTMENT POINT	
			UNIT	LOCATION		UNIT	ADJUST
S-METER • FM (narrow)	4	• Apply no signal to ANTENNA CONNECTOR.	FRONT PANEL	METER	Approx. S1		Verify
	NOTE: R80 controls total gain adjustment, so it is not be touched as noise will increase. However, it may be necessary to adjust R80 under the following condition: If the METER indicates more than S1 in step 4, adjust R51 to S1 and then follow step 1 again. After completing the above adjustment, adjust R80 to S9 with 0.1mV input.						
S-METER • FM (wide)	1	• Display freq.: 762.0000MHz • Mode: FM (wide) • Apply RF signal to ANTENNA CONNECTOR. Level: 100mV (−7dBm) Dev.: ±3.5kHz	FRONT PANEL	METER	S9+60dB	IF	R28

RF AND IF UNITS

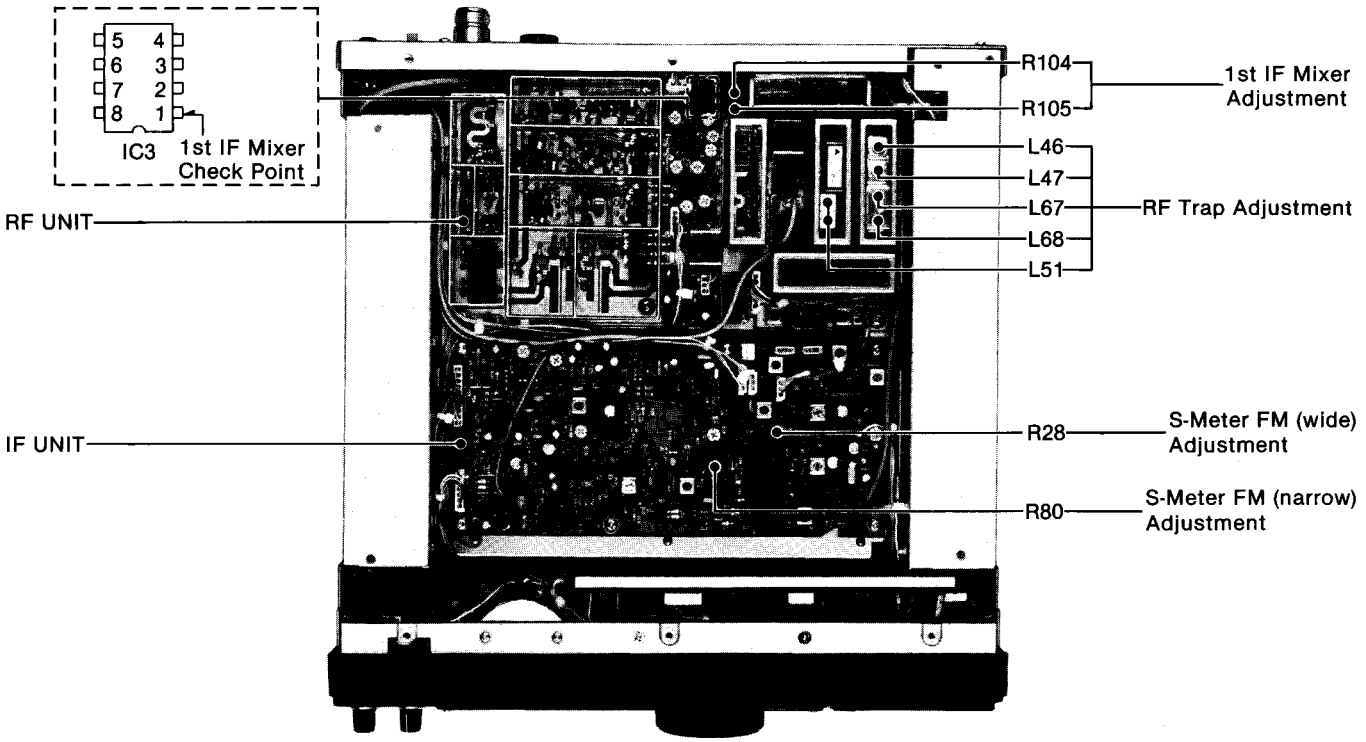

MAIN UNIT

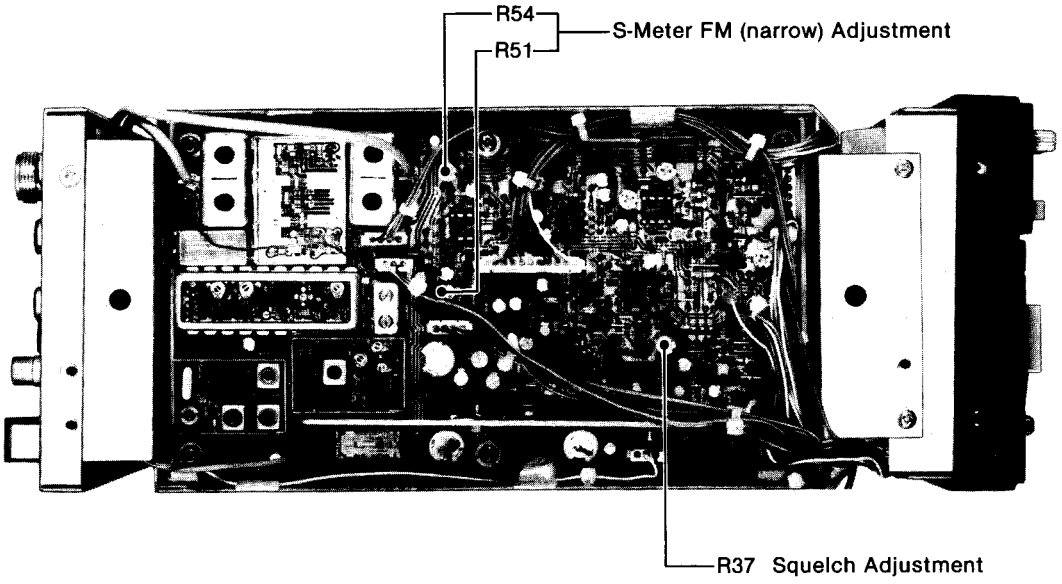

CONNECTIONS

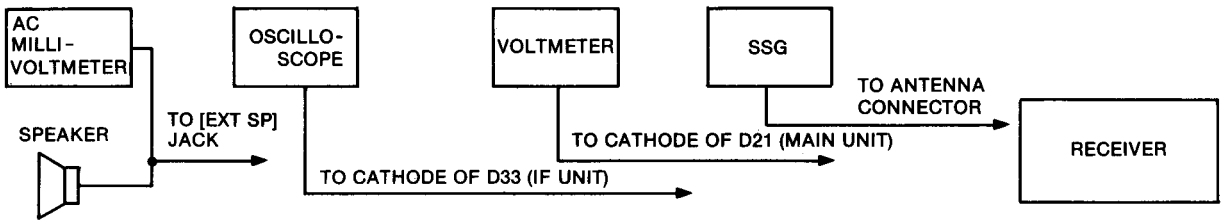

ADJUSTMENT		ADJUSTMENT CONDITIONS	MEASUREMENT		VALUE	ADJUSTMENT POINT	
			UNIT	LOCATION		UNIT	ADJUST
METER SQUELCH	1	• Display freq.: any (except 762MHz) • Mode: FM (narrow) • SQUELCH CONTROL: 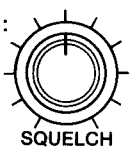 	FRONT PANEL	METER	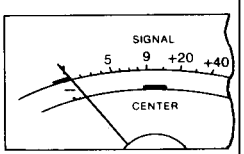 	MAIN	R76
	2	• SQUELCH CONTROL: Max. clockwise			More than S9+60dB		Verify
	NOTE: If the METER does not indicate more than S9+60dB at step 2, repeat "S-METER" adjustment.						
CENTER METER	1	• Display freq.: 26.0000MHz • Mode: FM (wide) • R29, R32 (MAIN UNIT): Center • Apply RF signal to ANTENNA CONNECTOR. Level: 32μV (−77dBm) Mod.: OFF Freq.: 26.0000MHz	FRONT PANEL	METER	Same value as no signal receiving.	IF	R127
	2	• Display freq.: 26.1000MHz • RF signal freq.: 26.0000MHz			S9+50dB	MAIN	R32
	3	• Display freq.: 26.0000MHz • RF signal freq.: 26.0000MHz			Center		R29
	NOTE: Repeat steps 2 and 3 several times.						
	4	• Display freq.: 26.0000MHz • Mode: FM (narrow)	FRONT PANEL	METER	Center	IF	R92
CENTER STOP	1	• Display freq.: 26.0000MHz±3.5~5kHz • Mode: FM (narrow) • Apply RF signal to ANTENNA CONNECTOR. Level: 32μV (−77dBm) Freq.: 26.0000MHz	MAIN	Connect a voltmeter to cathode of D21.	Frequency differencies in the (+) and (−) directions should be the same, i.e., 26.0035MHz and 25.9965MHz when the voltage of D21 is HIGH (8V).	MAIN	R66
NOISE BLANKER	1	• Display freq.: 26.0000MHz • Mode: SSB • NOISE BLANKER SWITCH: ON • Apply noise signal to ANTENNA CONNECTOR.	IF	Connect an oscilloscope to cathode of D33.	Noise wave form maximum	IF	L10
AF GAIN	1	• Mode: FM (narrow) • AF GAIN CONTROL: Max.	REAR PANEL	Connect an AC millivoltmeter to [EXT SP] JACK with an 8Ω speaker.	4.8V	MAIN	R124

RECEIVER ADJUSTMENT (Continued)

ADJUSTMENT		ADJUSTMENT CONDITIONS	MEASUREMENT		VALUE	ADJUSTMENT POINT	
			UNIT	LOCATION		UNIT	ADJUST
IF NOTCH (5kHz)	1	• Display freq.: 762.0000MHz • Mode: FM (wide) • Apply RF signal to ANTENNA CONNECTOR. Level: 0.1mV (−67dBm) Dev.: 50kHz Mod.: 5kHz	REAR PANEL	Connect a voltmeter to [EXT SP] JACK with an 8Ω speaker.	Minimum	IF	R171, R158

MAIN UNIT

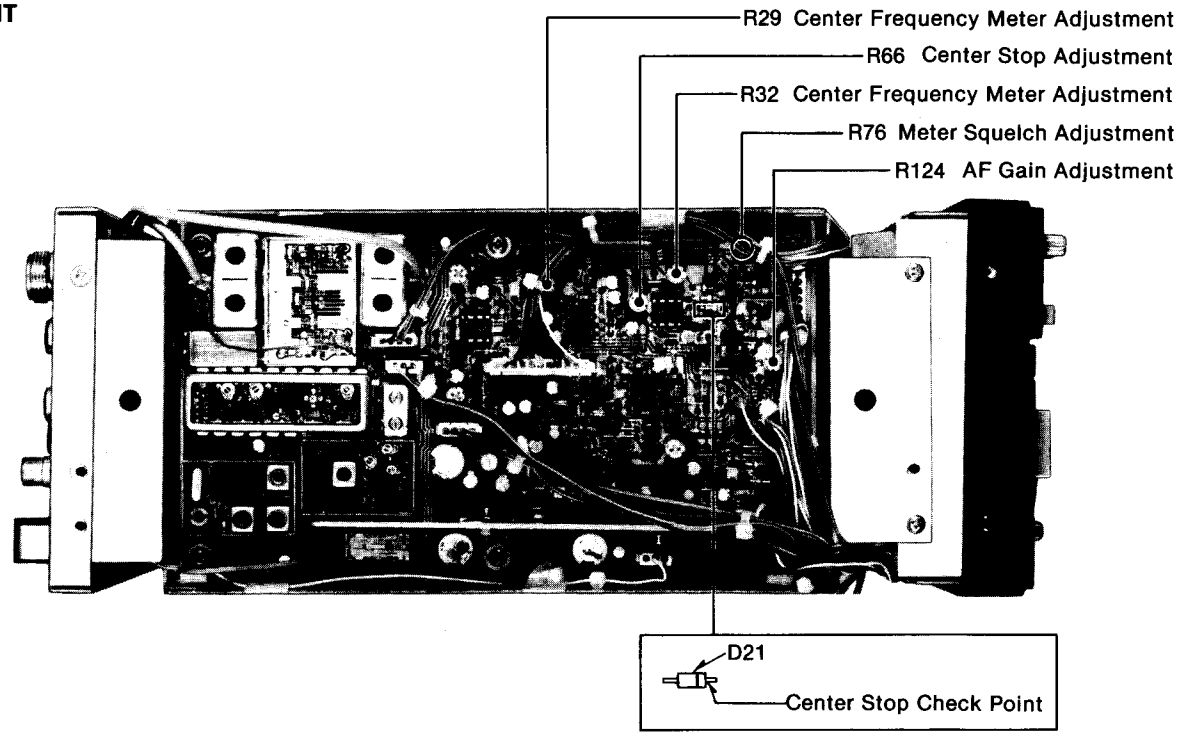

IF UNIT

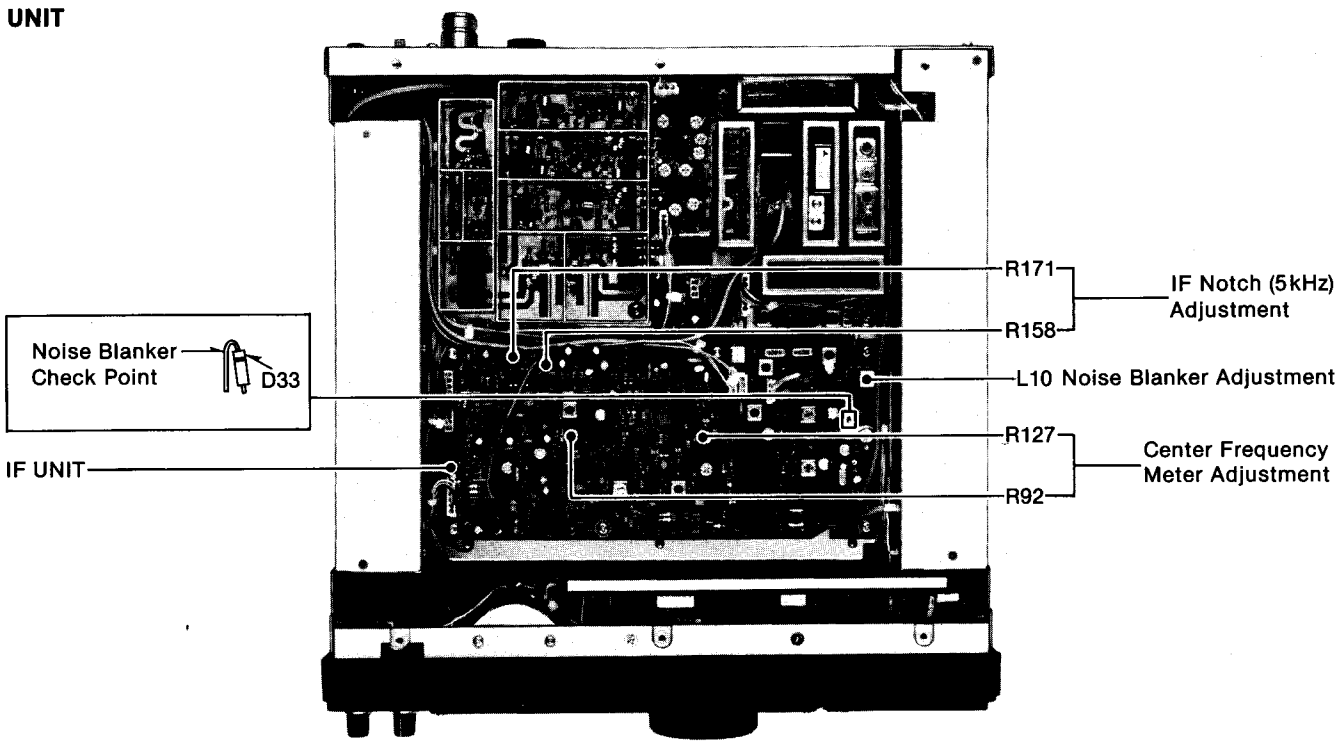

7-1 INTERCONNECTION

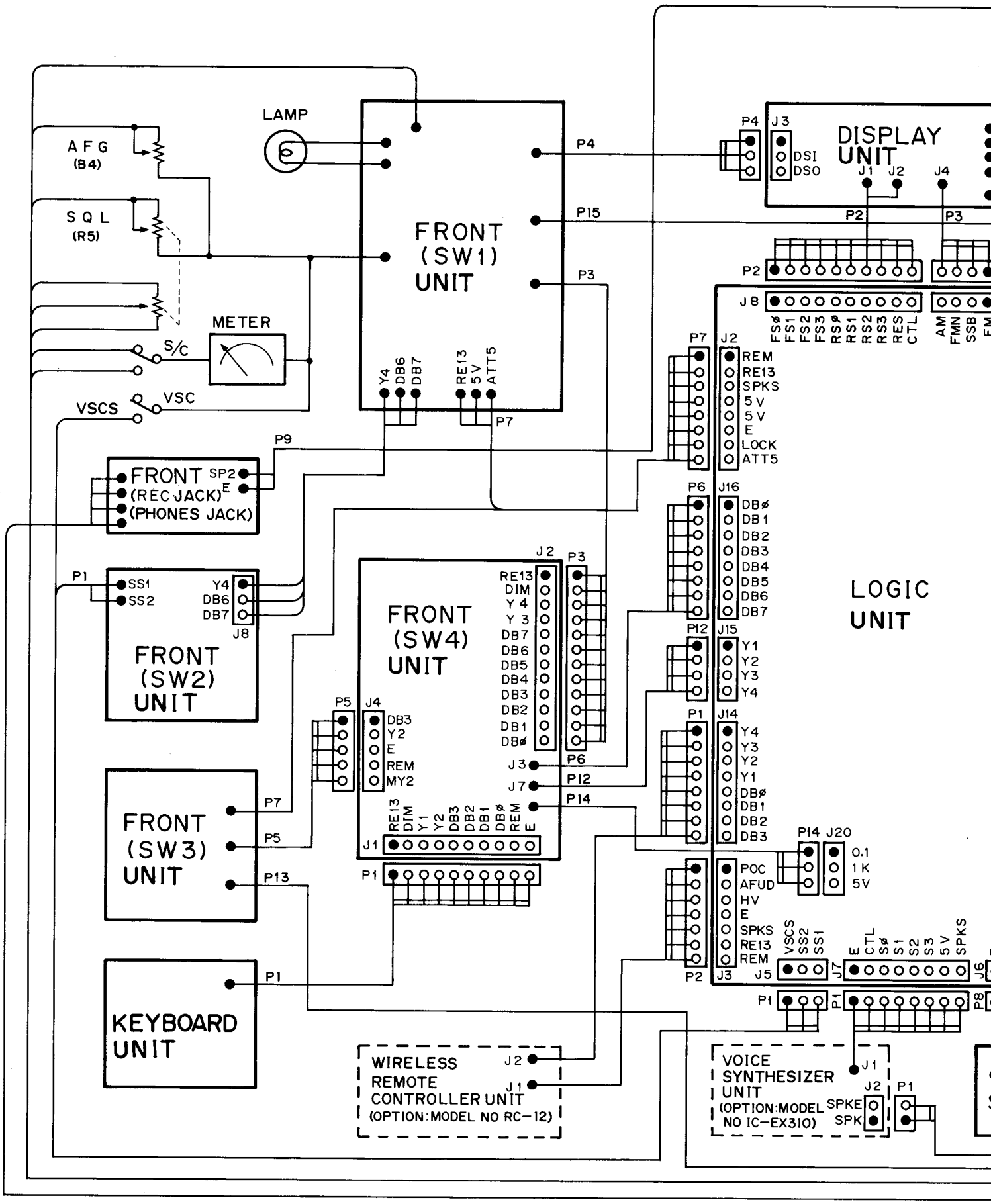

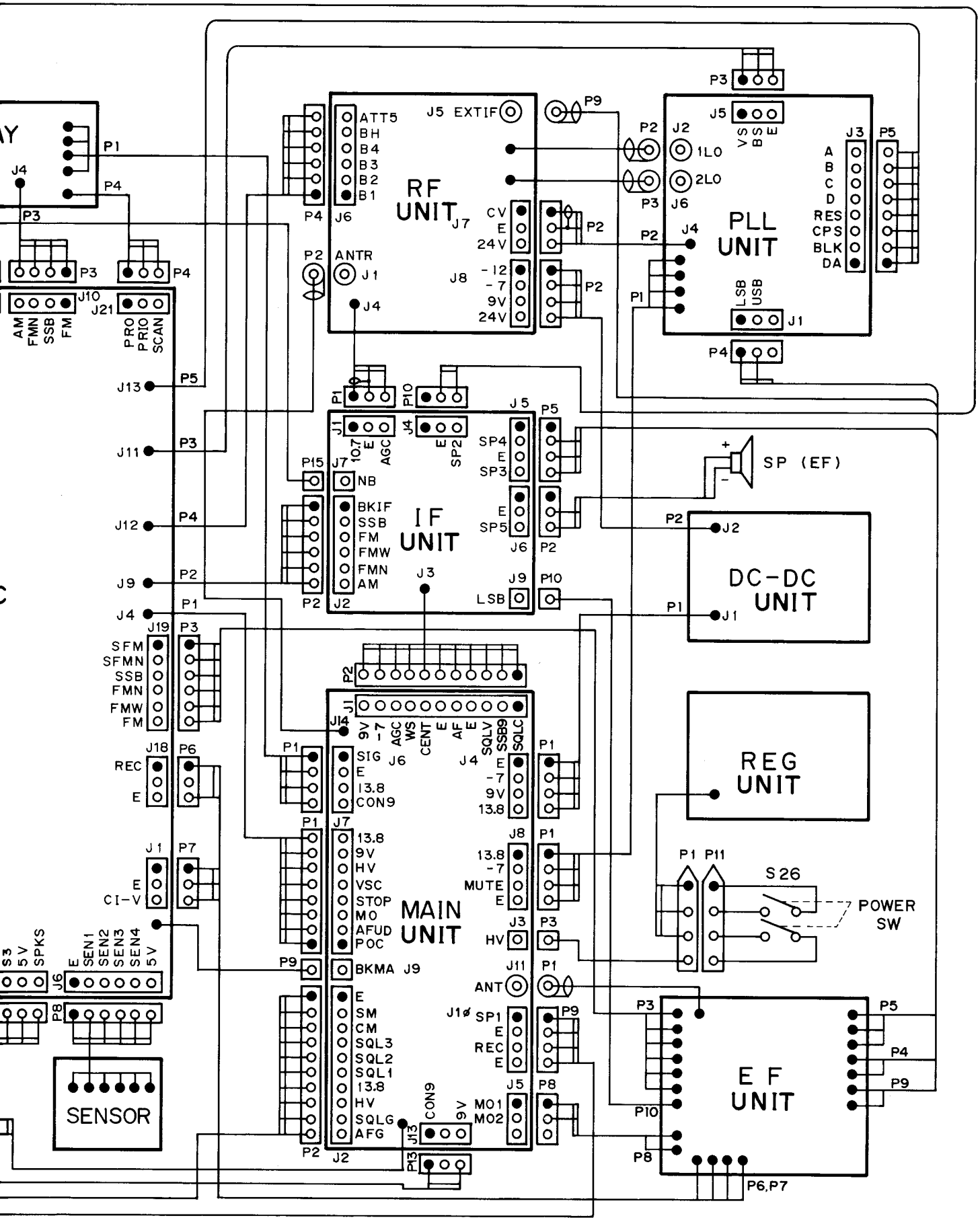
RF UNIT
ATT5
BH
B4
B3
B2
B1
J5 EXTIF
ANTR
J1
CV
E
24V
-12
-7
9V
24V
PLL UNIT
1LO
2LO
VS
BS
E
A
B
C
D
RES
CPS
BLK
DA
LSB
USB
IF UNIT
NB
BKIF
SSB
FM
FMW
FMN
AM
SP4
SP3
SP5
LSB
SP (EF)
DC-DC UNIT
REG UNIT
MAIN UNIT
SIG
13.8
CON9
9V
-7
AGC
WS
CENT
AF
SQLV
SSB9
SQLC
HV
VSC
STOP
MO
AFUD
POC
BKMA
MUTE
ANT
SP1
REC
SM
CM
SQL3
SQL2
SQL1
SQLG
AFG
MO1
MO2
E F UNIT
S26
POWER SW
SENSOR
AM
FMN
SSB
FM
PRO
PRIO
SCAN
SFM
SFMN
SSB
FMN
FMW
FM
REC
CI-V
SEN1
SEN2
SEN3
SEN4
5V
SPKS

7-2 FRONT UNITS

• FRONT (SW4) UNIT

IC		
IC1	**μPD4081BC** (QUAD 2–INPUT AND GATE)	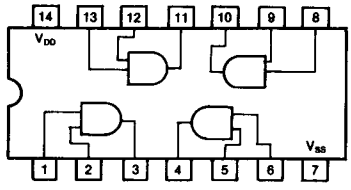
TRANSISTOR		
2SC3399 Q1, Q2 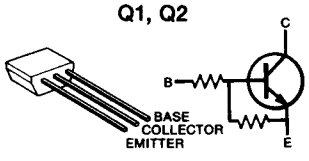		

• FRONT (SW1) UNIT

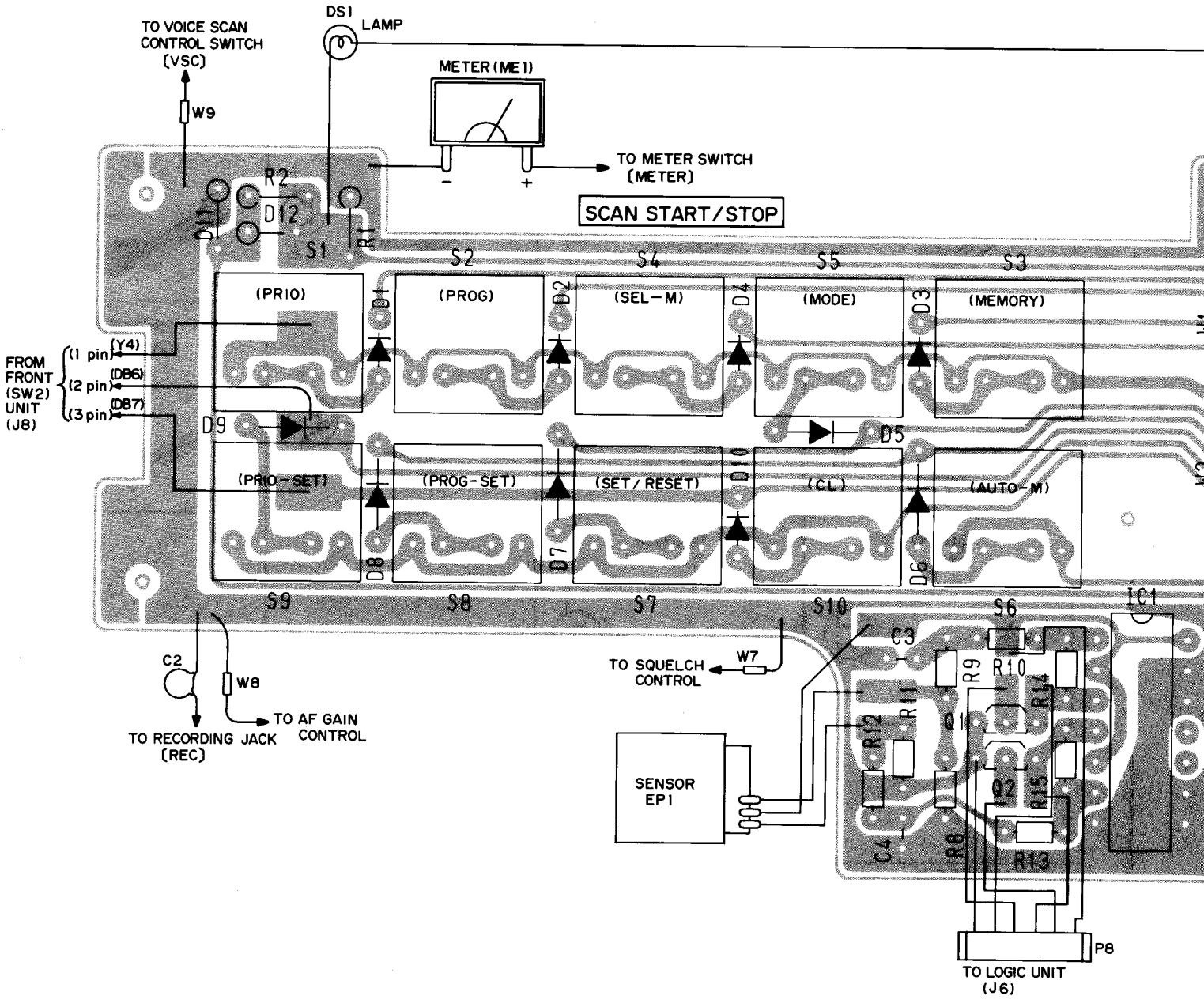

• FRONT (SW2) UNIT

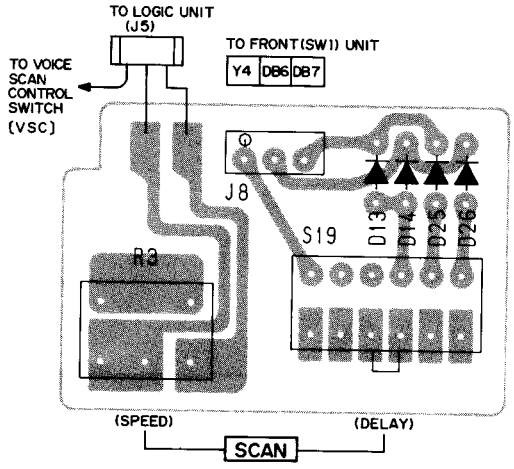

• FRONT (SW3) UNIT

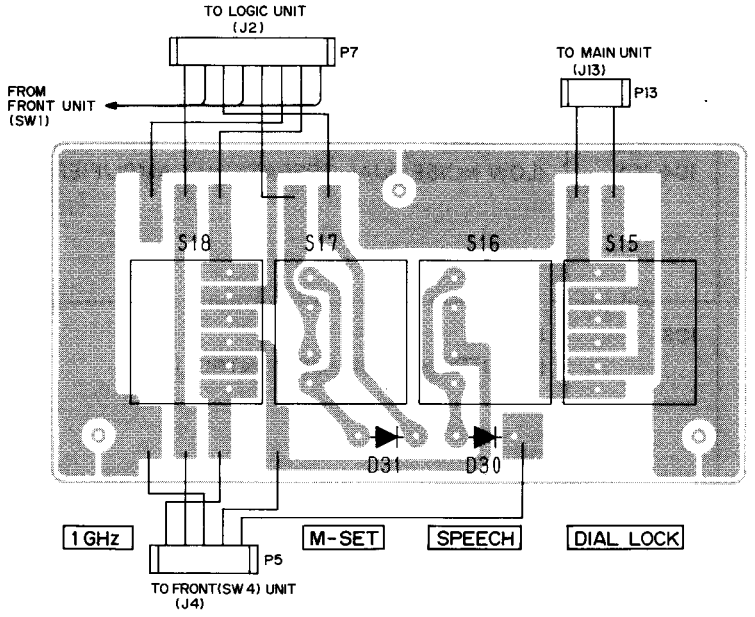

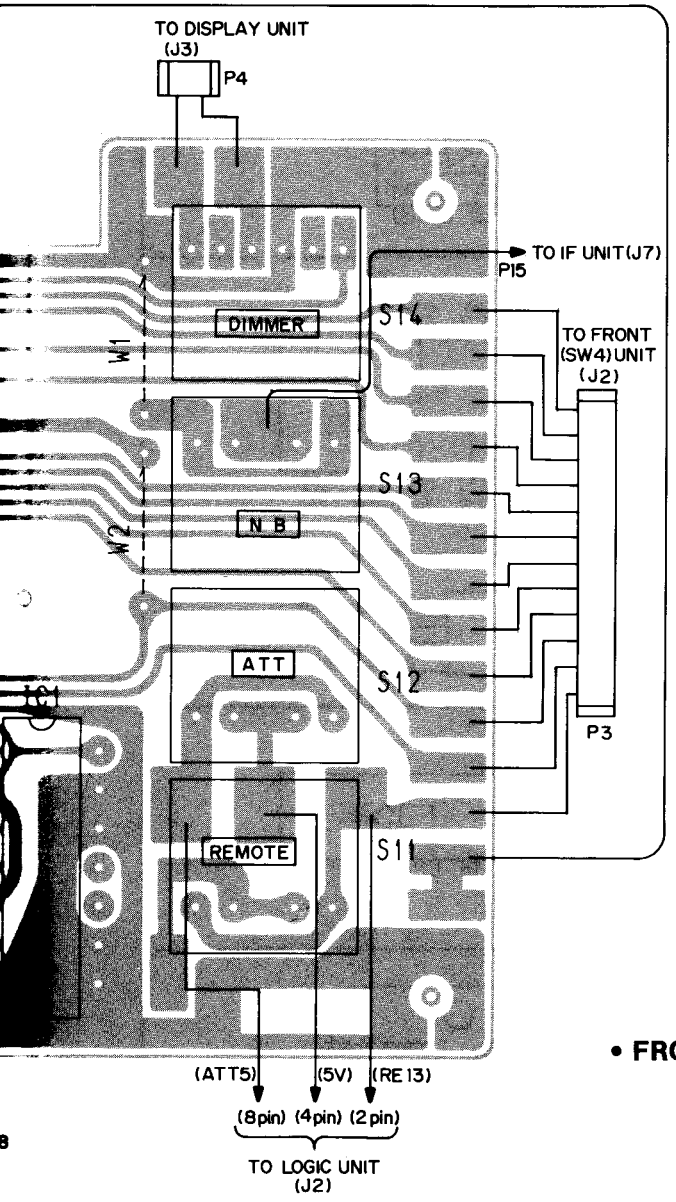

• FRONT (SW4) UNIT

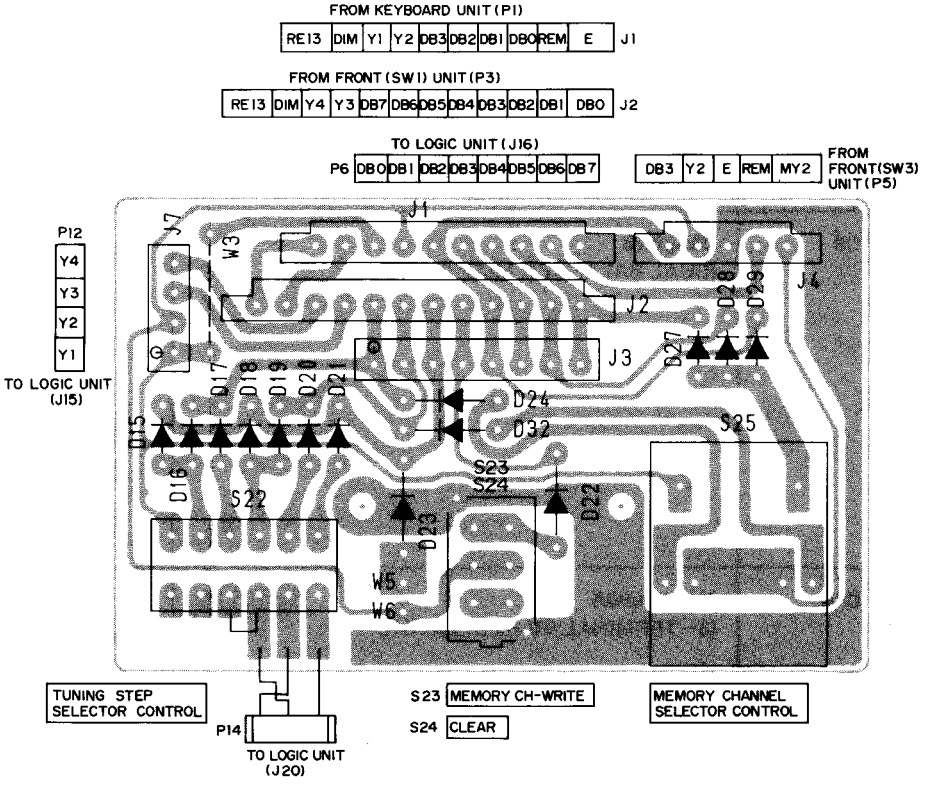

7-3 MAIN UNIT

• MAIN UNIT

IC		
IC1, IC2, IC4, IC5	**NJM4558D** (LOW NOISE DUAL OPERATIONAL AMPLIFIER)	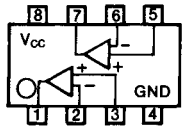
IC3	**LA2600** (ELECTRONIC VOLUME CONTROL)	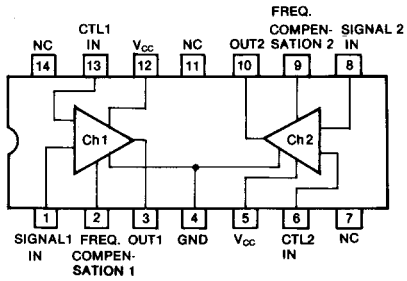
IC6	**NJM7809A** (3−TERMINAL 9V REGULATOR)	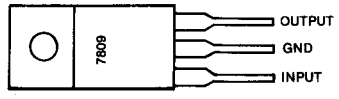
IC7	**M5218L** (LOW NOISE DUAL OPERATIONAL AMPLIFIER)	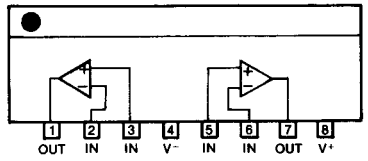
IC8	**μPC1241H** (5.8W AUDIO POWER AMPLIFIER)	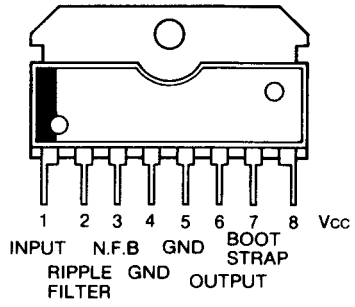
IC9	**DM-88XB** (DUAL BALANCED MODULATE)	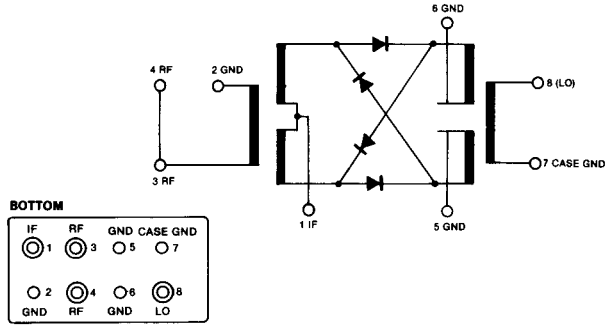
IC10	**NJM78L09A** (3−TERMINAL 9V REGULATOR)	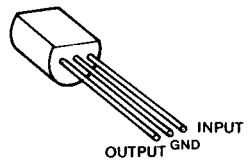

TRANSISTORS

2SK30AT Q1 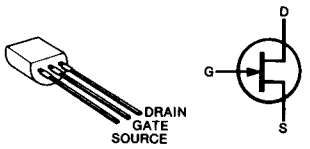	**2SC2785** Q2, Q9, Q10, Q18 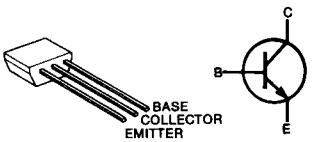	**2SA1348** Q3, Q4 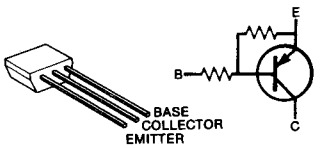	**2SC3402** Q5 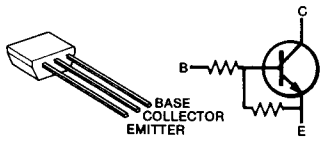
2SC3399 Q6, Q7, Q17, Q19 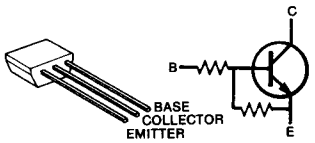	**2SA1048** Q11 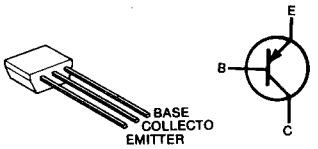	**2SC945** Q13 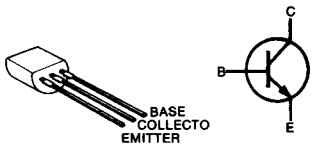	**2SC383TM** Q14 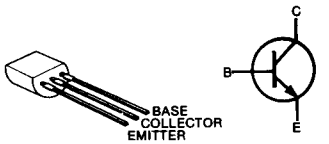
2SK241 Q15 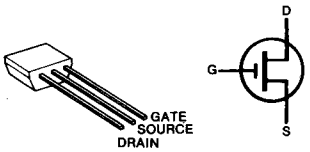	**2SC2026** Q16 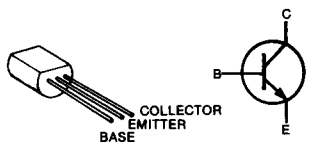		

• HPF UNIT

TRANSISTOR

2SC2367 Q1 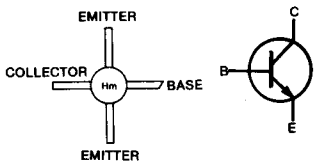	

• DOUBLER UNIT

TRANSISTOR

2SC2367 Q1 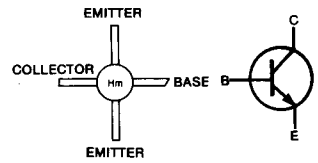	

5-1 FRAME DISASSEMBLY

1. Unscrew and remove the 12 screws labelled ① from the top cover. Remove the top cover.
2. Unscrew and remove the 6 screws labelled ② from the bottom cover. Remove the bottom cover.
3. Remove the hex screw labelled ③ from the TUNING CONTROL. Pull out the TUNING CONTROL and the other 6 knobs from the front panel.
4. Unscrew and remove the 5 screws labelled ④ from the front panel. Remove the front panel.

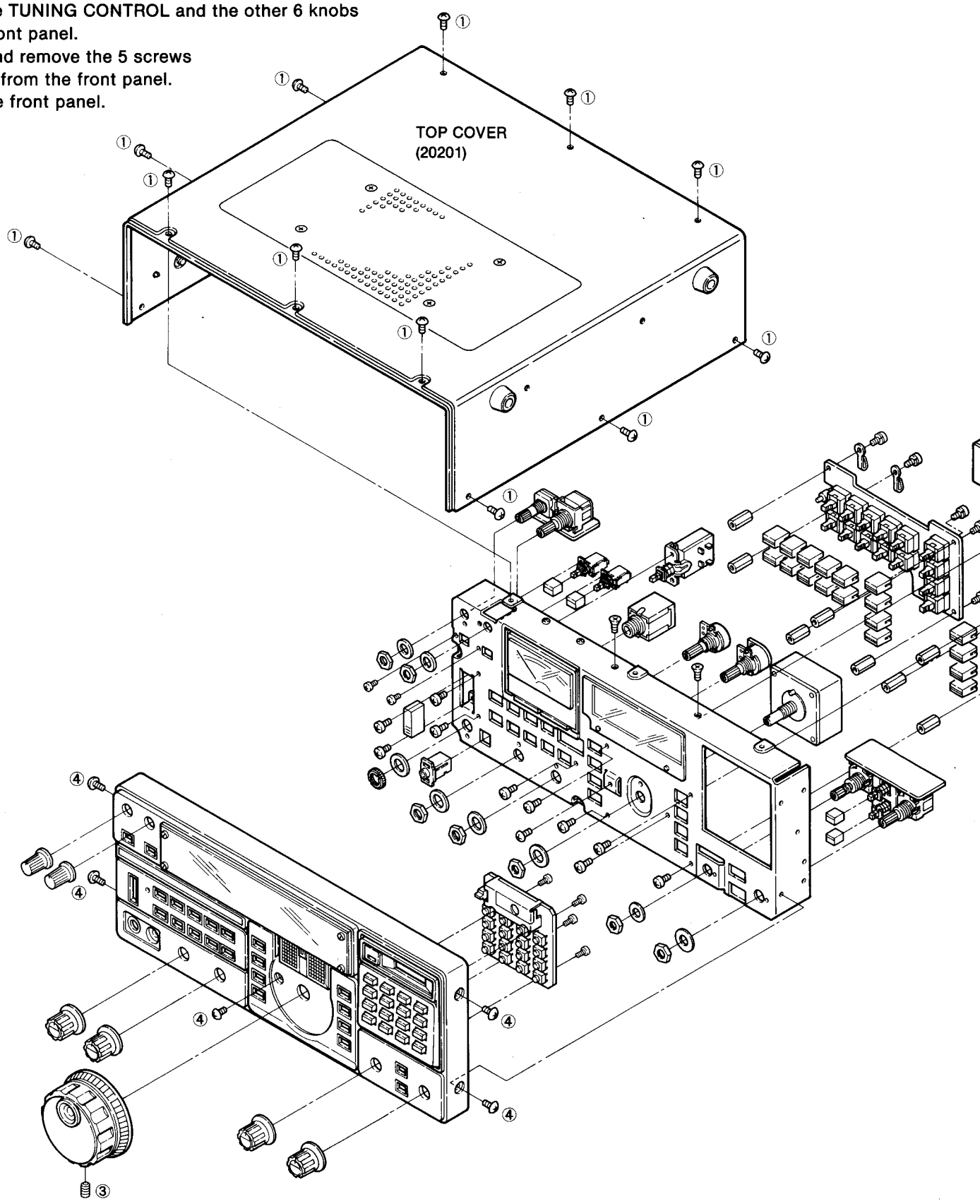

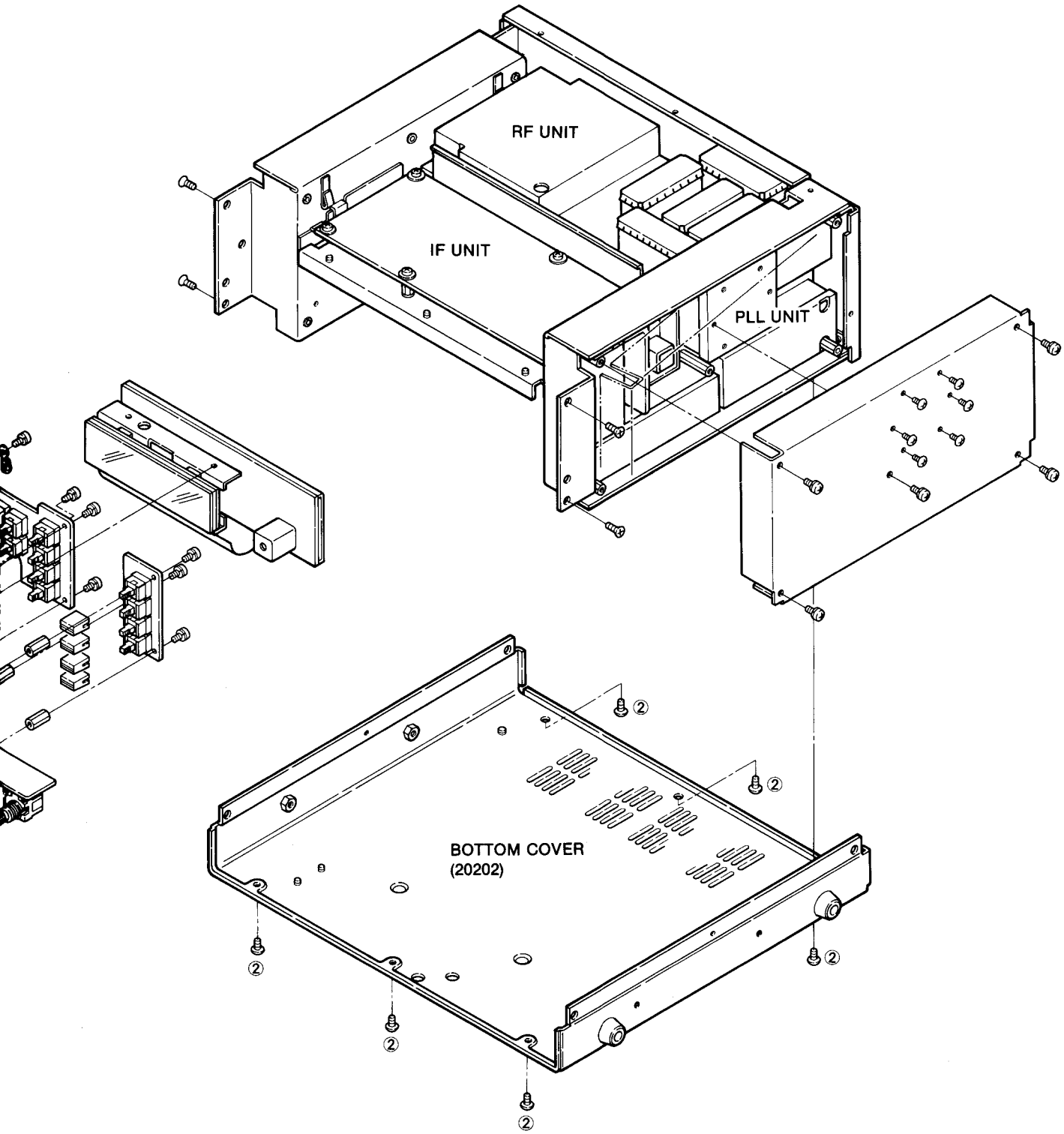
RF UNIT
IF UNIT
PLL UNIT
BOTTOM COVER
(20202)
②
②
②
②
②

2 FRONT PANEL DISASSEMBLY

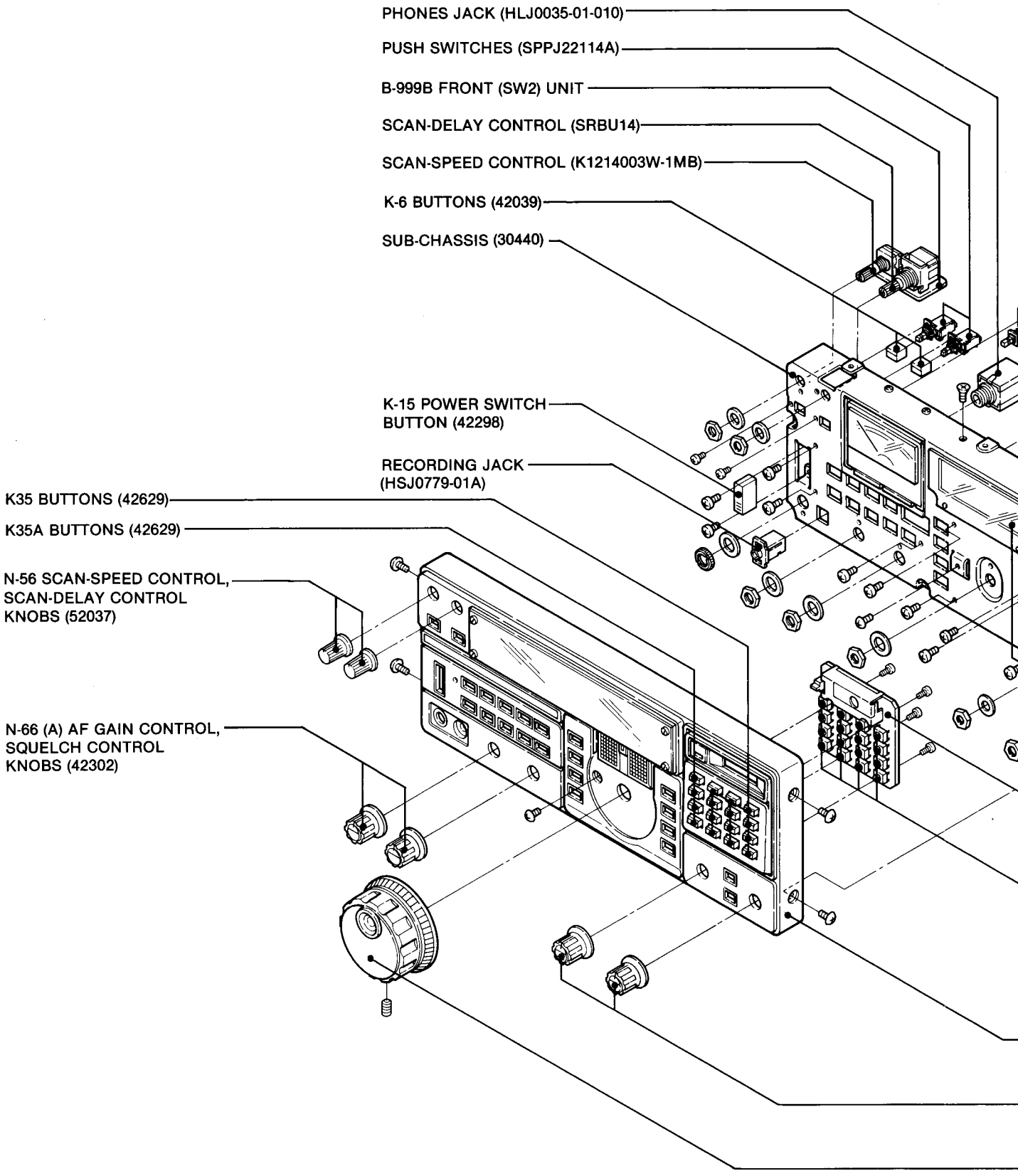

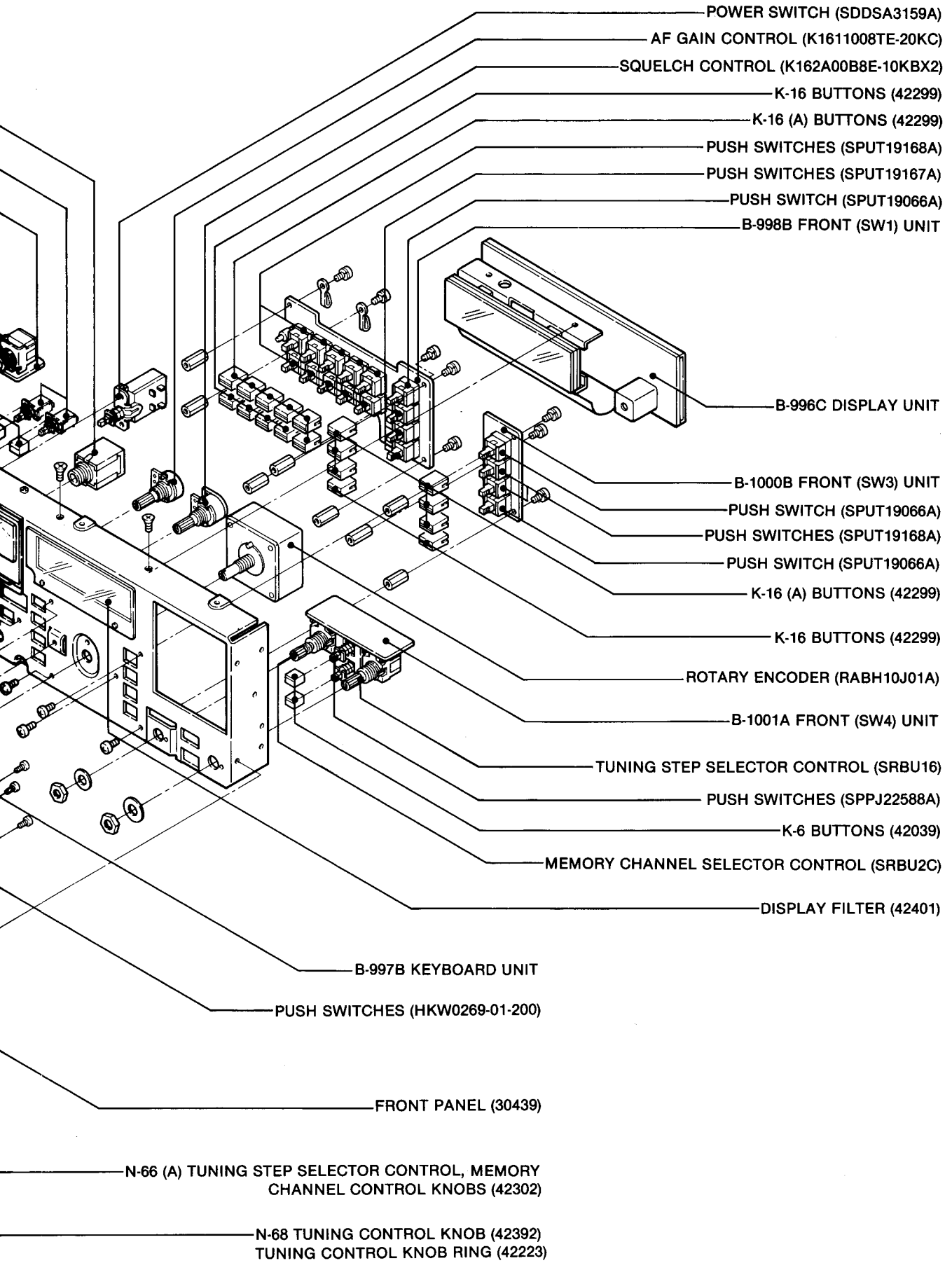
POWER SWITCH (SDDSA3159A)
AF GAIN CONTROL (K1611008TE-20KC)
SQUELCH CONTROL (K162A00B8E-10KBX2)
K-16 BUTTONS (42299)
K-16 (A) BUTTONS (42299)
PUSH SWITCHES (SPUT19168A)
PUSH SWITCHES (SPUT19167A)
PUSH SWITCH (SPUT19066A)
B-998B FRONT (SW1) UNIT
B-996C DISPLAY UNIT
B-1000B FRONT (SW3) UNIT
PUSH SWITCH (SPUT19066A)
PUSH SWITCHES (SPUT19168A)
PUSH SWITCH (SPUT19066A)
K-16 (A) BUTTONS (42299)
K-16 BUTTONS (42299)
ROTARY ENCODER (RABH10J01A)
B-1001A FRONT (SW4) UNIT
TUNING STEP SELECTOR CONTROL (SRBU16)
PUSH SWITCHES (SPPJ22588A)
K-6 BUTTONS (42039)
MEMORY CHANNEL SELECTOR CONTROL (SRBU2C)
DISPLAY FILTER (42401)
B-997B KEYBOARD UNIT
PUSH SWITCHES (HKW0269-01-200)
FRONT PANEL (30439)
N-66 (A) TUNING STEP SELECTOR CONTROL, MEMORY CHANNEL CONTROL KNOBS (42302)
N-68 TUNING CONTROL KNOB (42392)
TUNING CONTROL KNOB RING (42223)

5-3 REAR PANEL DISASSEMBLY

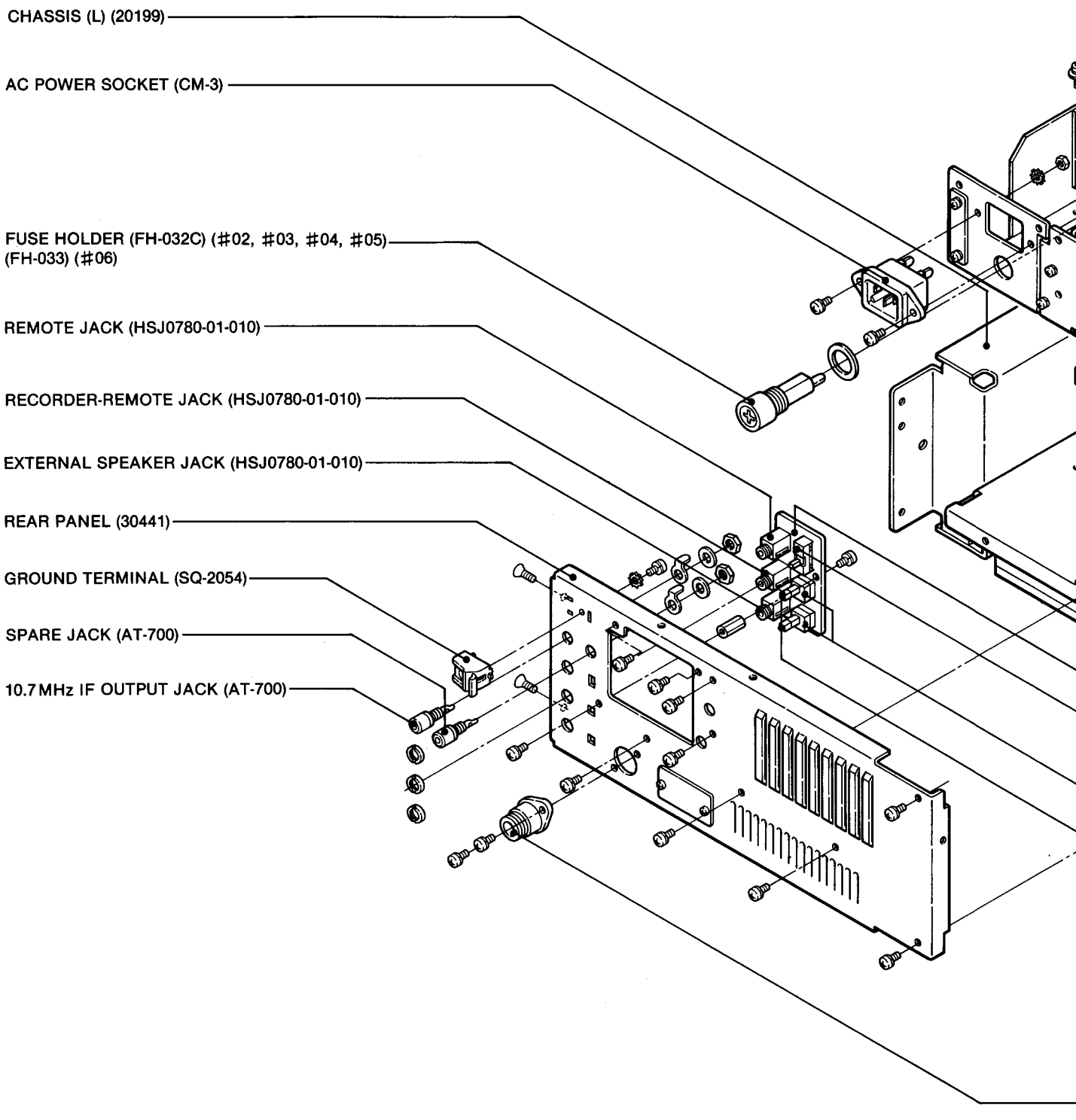

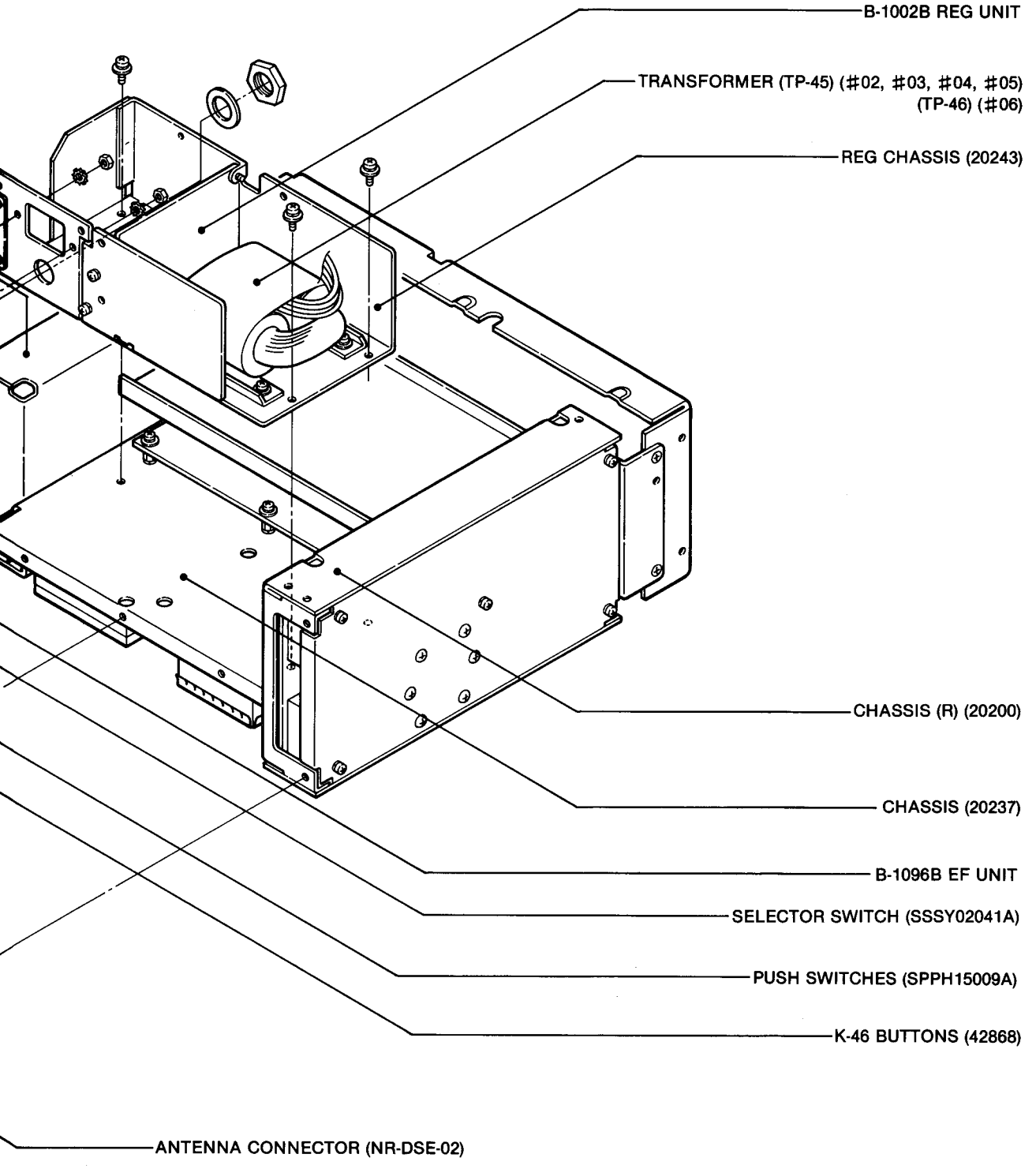
B-1002B REG UNIT
TRANSFORMER (TP-45) (#02, #03, #04, #05)
(TP-46) (#06)
REG CHASSIS (20243)
CHASSIS (R) (20200)
CHASSIS (20237)
B-1096B EF UNIT
SELECTOR SWITCH (SSSY02041A)
PUSH SWITCHES (SPPH15009A)
K-46 BUTTONS (42868)
ANTENNA CONNECTOR (NR-DSE-02)

5-4 TOP SIDE CONNECTOR CONNECTIONS

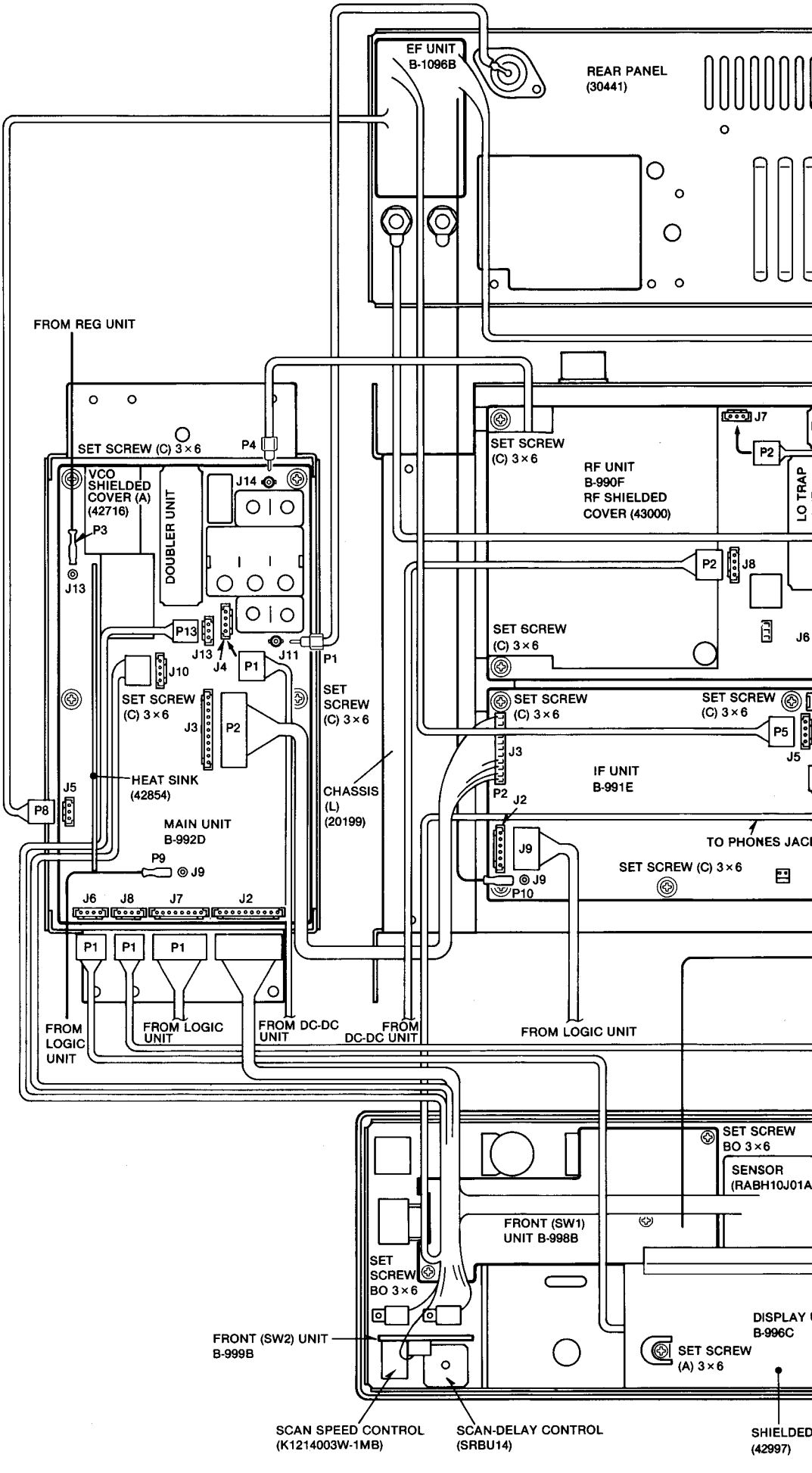

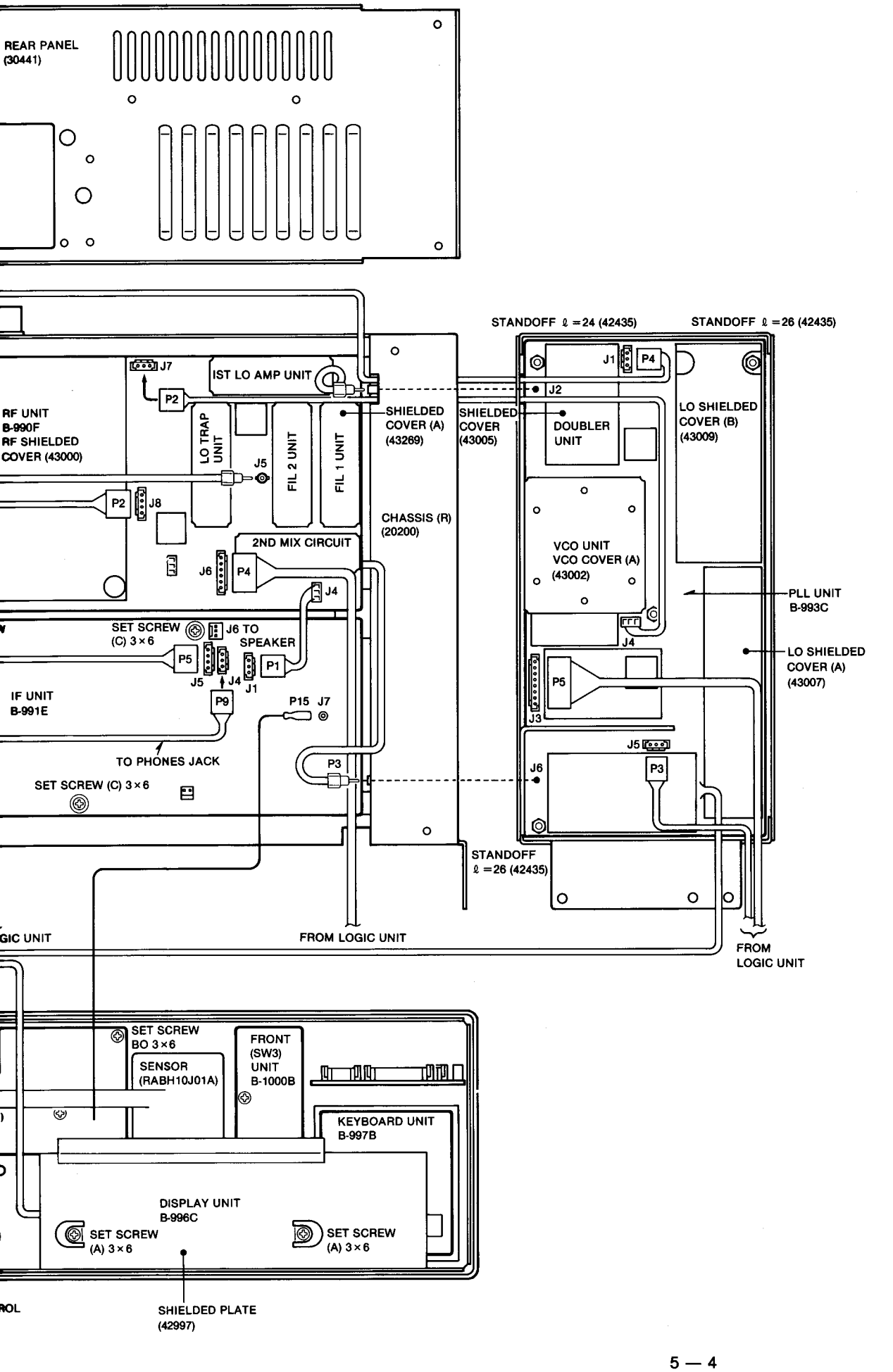
REAR PANEL
(30441)
STANDOFF ℓ =24 (42435)
STANDOFF ℓ =26 (42435)
J7
IST LO AMP UNIT
P2
J1
P4
J2
RF UNIT
B-990F
RF SHIELDED
COVER (43000)
LO TRAP
UNIT
FIL 2 UNIT
FIL 1 UNIT
J5
SHIELDED
COVER (A)
(43269)
SHIELDED
COVER
(43005)
DOUBLER
UNIT
LO SHIELDED
COVER (B)
(43009)
P2
J8
CHASSIS (R)
(20200)
2ND MIX CIRCUIT
J6
P4
J4
VCO UNIT
VCO COVER (A)
(43002)
PLL UNIT
B-993C
SET SCREW
(C) 3×6
J6 TO
SPEAKER
P5
P1
J5
J4
J1
J4
LO SHIELDED
COVER (A)
(43007)
IF UNIT
B-991E
P9
P15
J7
P5
J3
J5
TO PHONES JACK
P3
J6
P3
SET SCREW (C) 3×6
STANDOFF
ℓ =26 (42435)
FROM LOGIC UNIT
FROM
LOGIC UNIT
SET SCREW
BO 3×6
SENSOR
(RABH10J01A)
FRONT
(SW3)
UNIT
B-1000B
KEYBOARD UNIT
B-997B
DISPLAY UNIT
B-996C
SET SCREW
(A) 3×6
SET SCREW
(A) 3×6
SHIELDED PLATE
(42997)

• DOUBLER UNIT

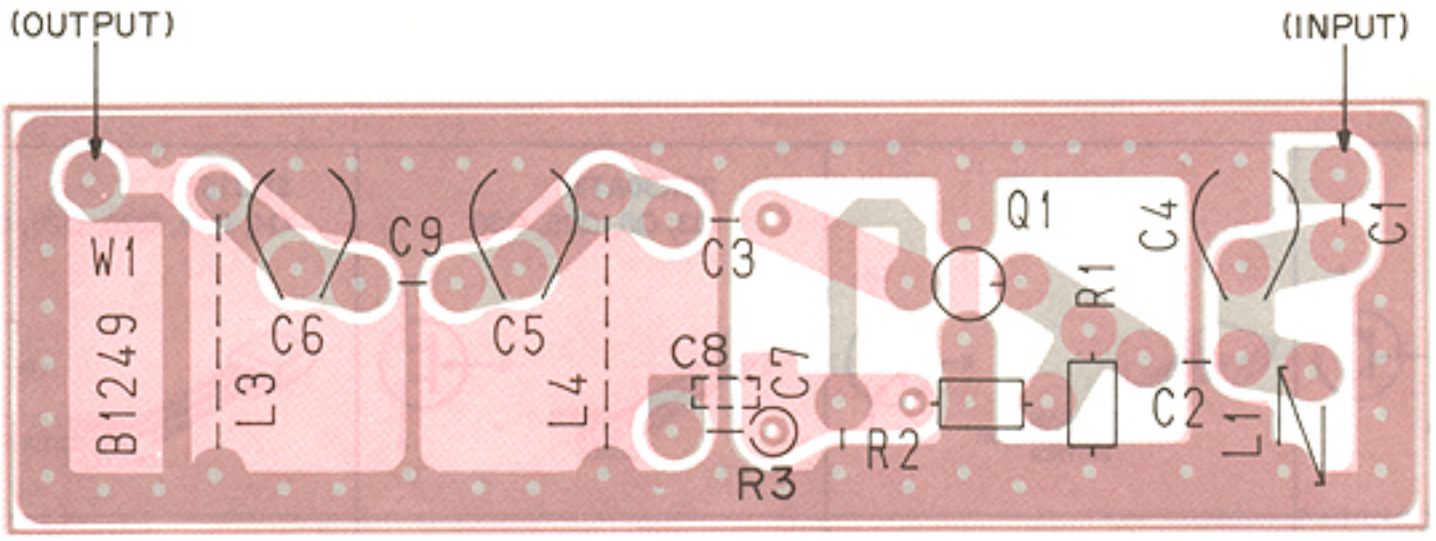

• MAIN UNIT

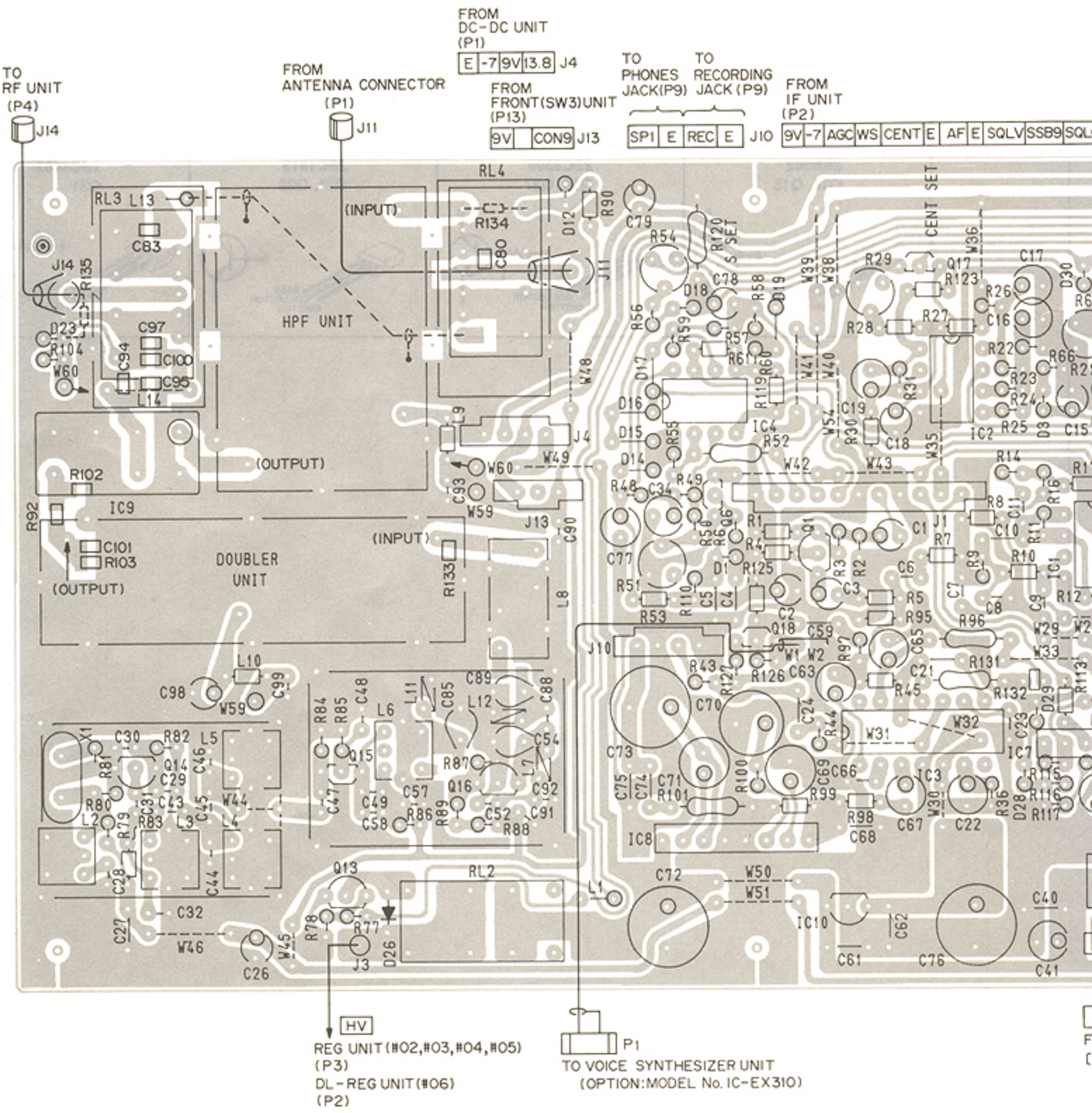

• HPF UNIT

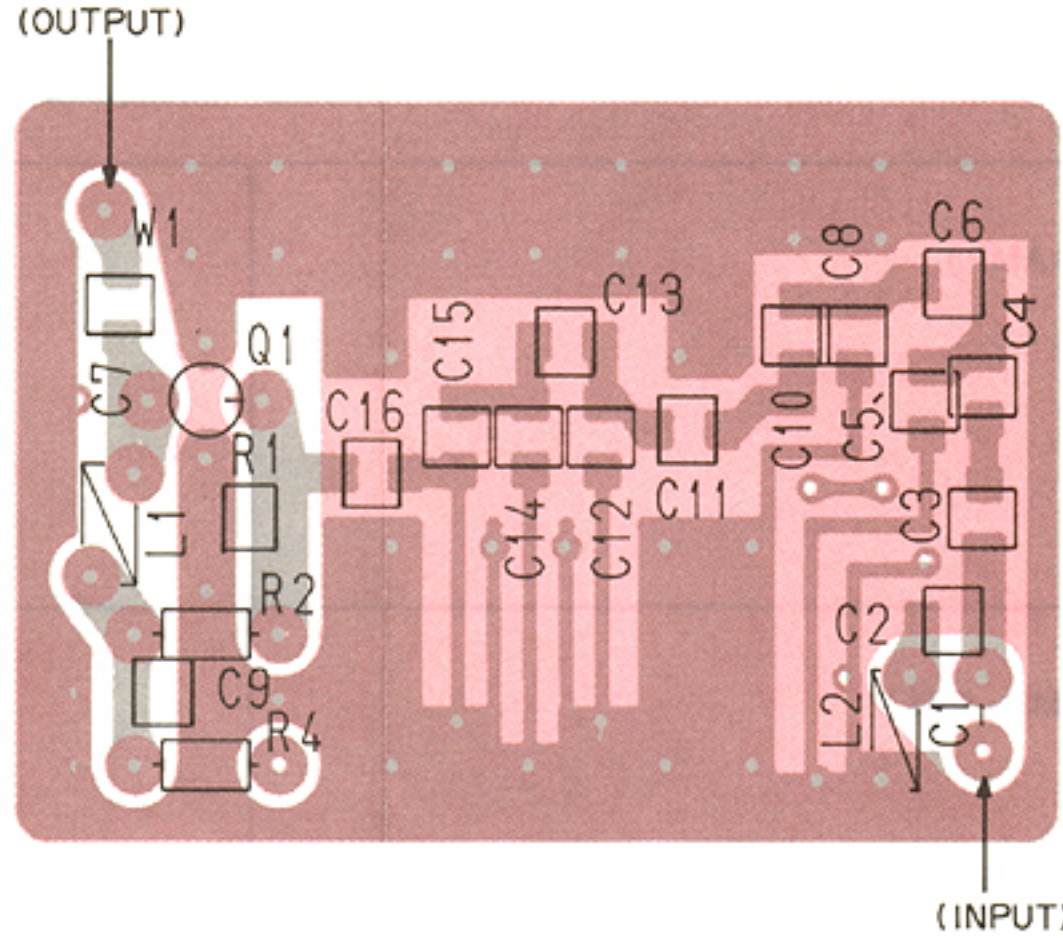

E | SQLV | SSB9 | SQLC J1

J2

E
SM
CM
SQL3
SQL2
SQL1
13.8
HV
SQLG
AFG

FROM METER SWITCH
FROM SQUELCH CONTROL
FROM FRONT (SW1) UNIT
FROM SQUELCH CONTROL
FROM AF GAIN CONTROL

J7

POC
AFUO
MO
STOP
VSC
HV
9V
13.8

FROM LOGIC UNIT (P1)

J8

13.8
-7
MUTE
E

FROM PLL UNIT (P1)

J6

SIG
E
13.8
CON9

TO DISPLAY UNIT (P1)

	MO2	MO1	J5

FROM EF UNIT (P8)
[RECORDER-REMOTE]

BKMA
LOGIC UNIT (P9)

7-4 IF UNIT

IC		
IC1	**BA401** (LIMITER AMP.)	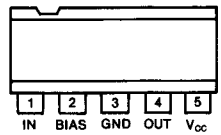
IC2	**TA7303P** (FM IF AMP., DET.)	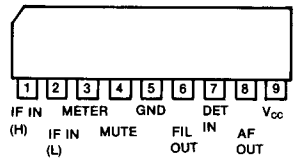
IC3	**μPC1037H** (DOUBLE–BALANCED MIXER)	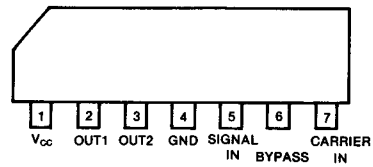
IC4, IC5	**μPC577H** (FM IF AMPLIFIER)	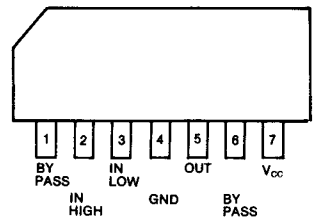
IC6	**NJM4558D** (LOW NOISE DUAL OPERATIONAL AMPLIFIER)	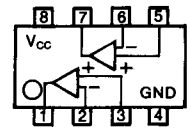

TRANSISTORS

2SA1048
Q1, Q29

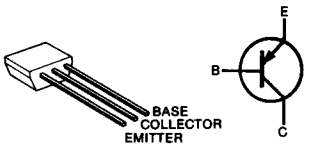

2SC2668
Q2

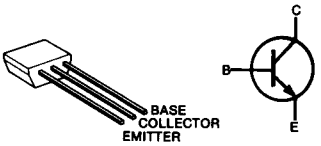

2SK30ATM
Q3, Q8, Q25, Q30

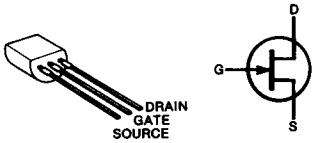

2SC1571
Q4, Q13, Q20, Q23, Q24

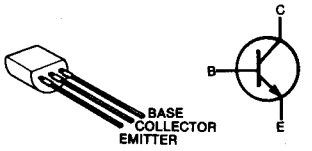

3SK74
Q5, Q6, Q7

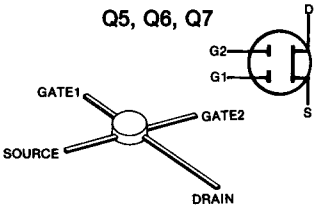

2SC2458
Q9, Q10, Q18, Q19, Q26

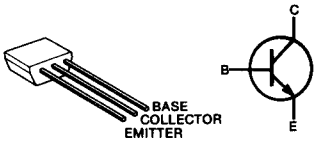

2SA1348
Q11, Q17, Q28

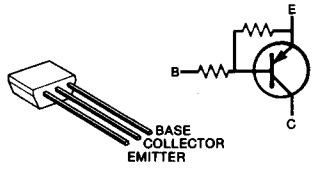

2SC945
Q12

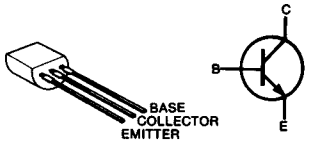

2SB562
Q14, Q15

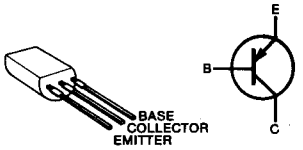

2SC3399
Q16, Q27

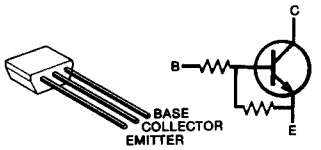

2SC1815
Q21, Q22

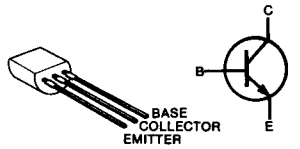

2SC3402
Q31

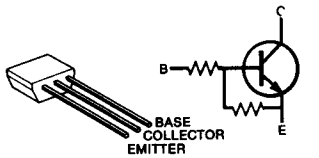

• IF UNIT

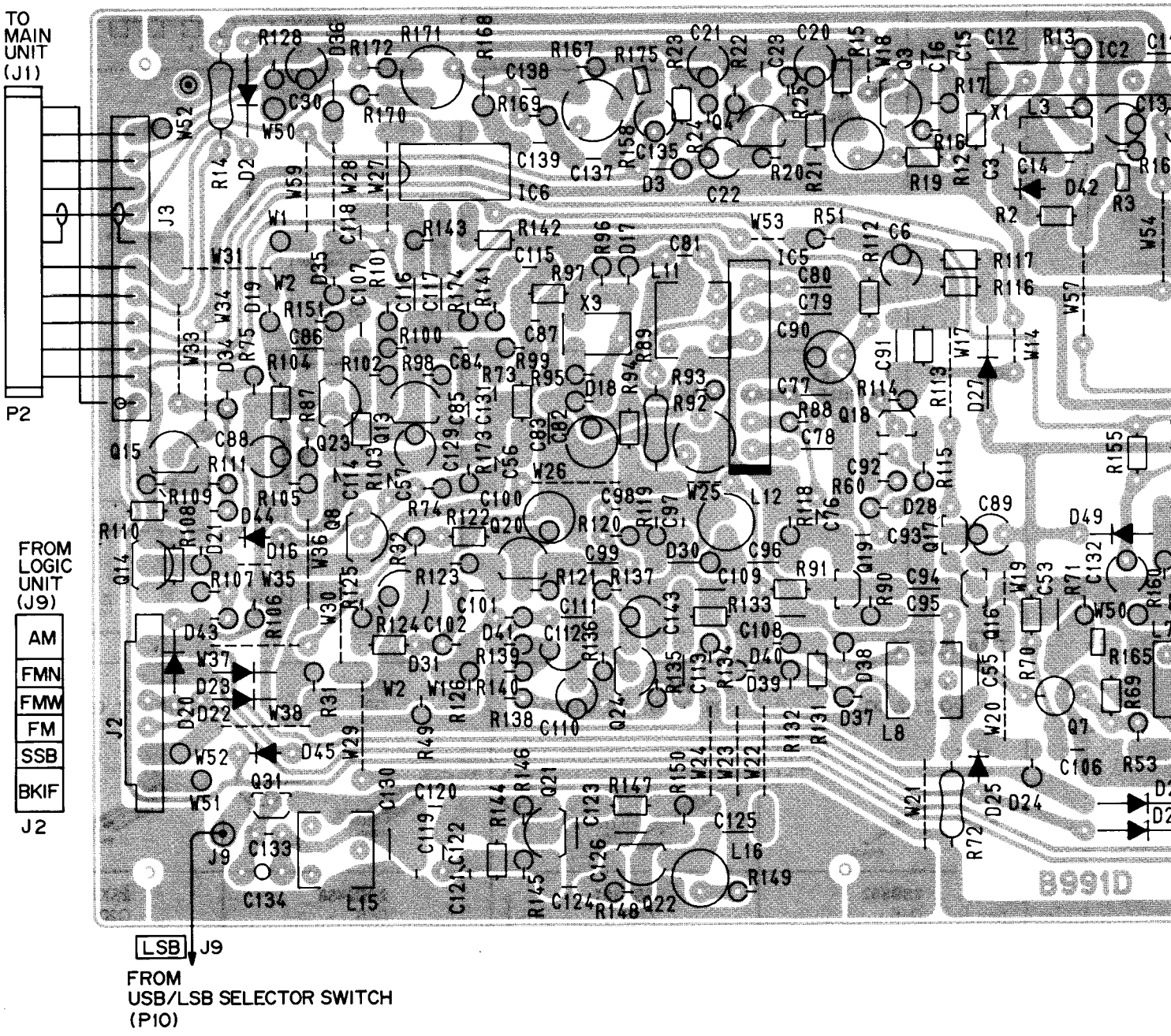
TO MAIN UNIT (J1)
P2
FROM LOGIC UNIT (J9)
AM
FMN
FMW
FM
SSB
BKIF
J2
LSB
J9
FROM USB/LSB SELECTOR SWITCH (P10)
B991D

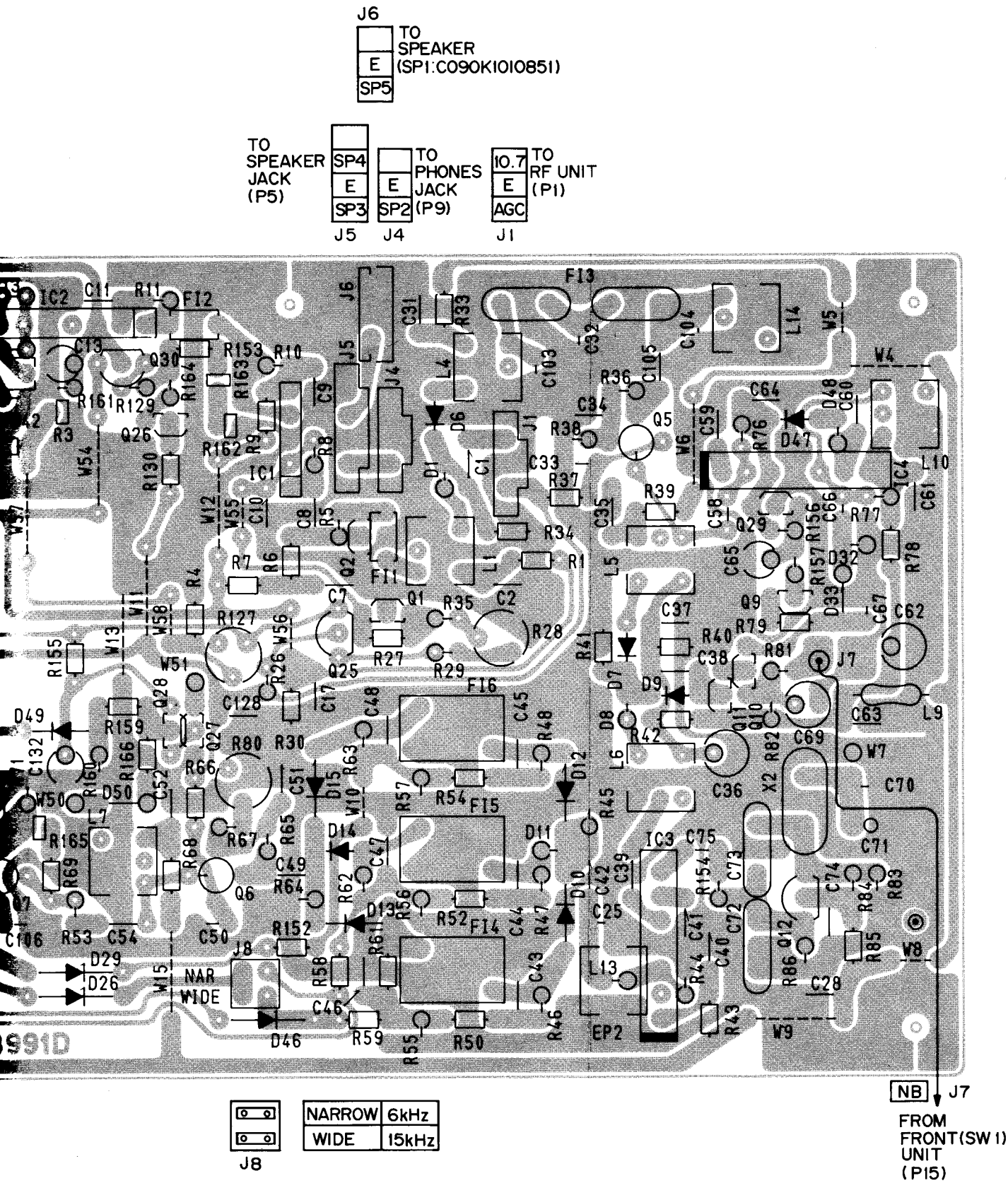
J6
TO SPEAKER (SP1:C090K1010851)
SP5
E
TO SPEAKER JACK (P5)
SP4
E
SP3
J5
TO PHONES JACK (P9)
SP2
E
J4
10.7
E
AGC
TO RF UNIT (P1)
J1
J8
NARROW 6kHz
WIDE 15kHz
NB
J7
FROM FRONT(SW1) UNIT (P15)
NAR
WIDE
EP2

7-5 RF UNIT

• RF UNIT

IC		
IC1, IC2, IC3, IC4	**NJM4558D** (LOW NOISE DUAL OPERATIONAL AMPLIFIER)	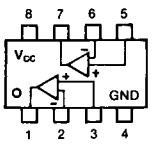
IC5	**BA618** (LED DRIVER)	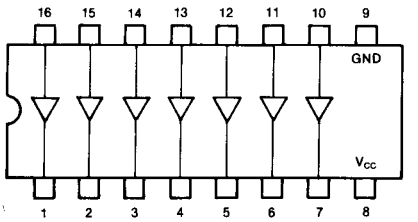
IC6	**DM-88XA** (DOUBLE-BALANCED MIXER)	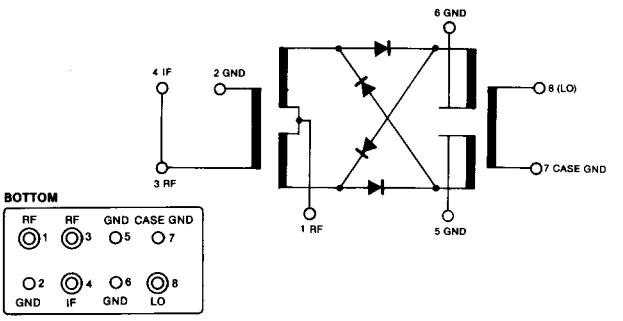
IC7	**DM-251E** (DOUBLE-BALANCED MIXER)	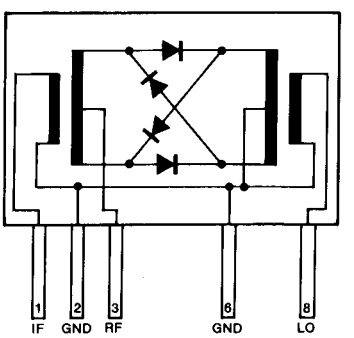

TRANSISTORS

3SK121
Q1, Q2, Q3, Q4

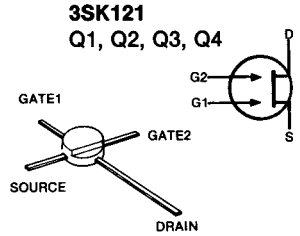

2SC3355
Q5, Q6, Q7, Q8, Q16, Q17

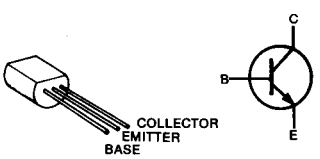

2SK241
Q9

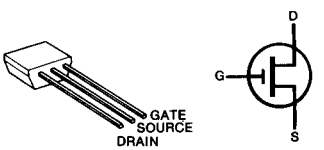

2SC3399
Q10, Q11, Q12, Q13, Q14

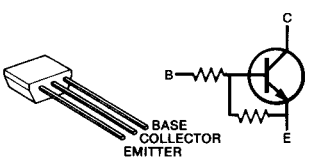

2SB562
Q15

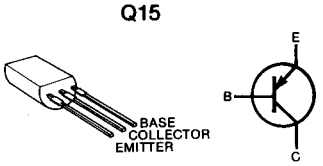

3SK101
Q18

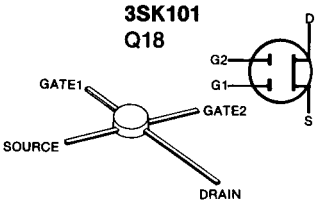

2SC2458
Q19

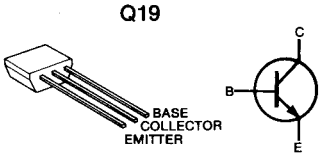

2SK30ATM
Q20

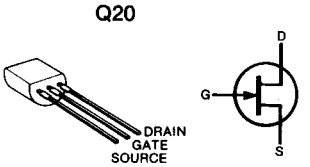

2SC945
Q21

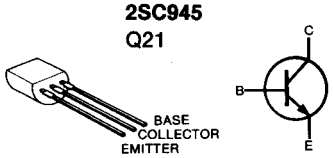

• 1st LO AMP UNIT

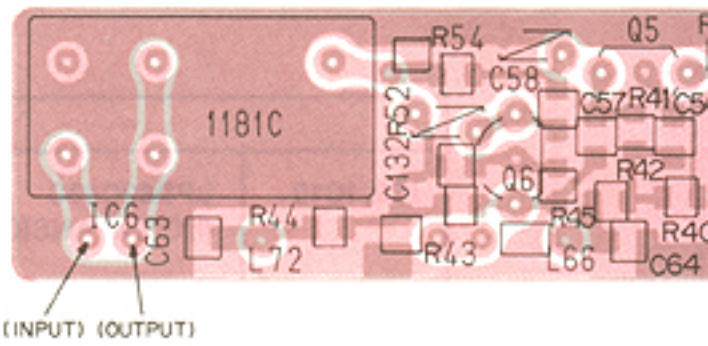

• RF UNIT

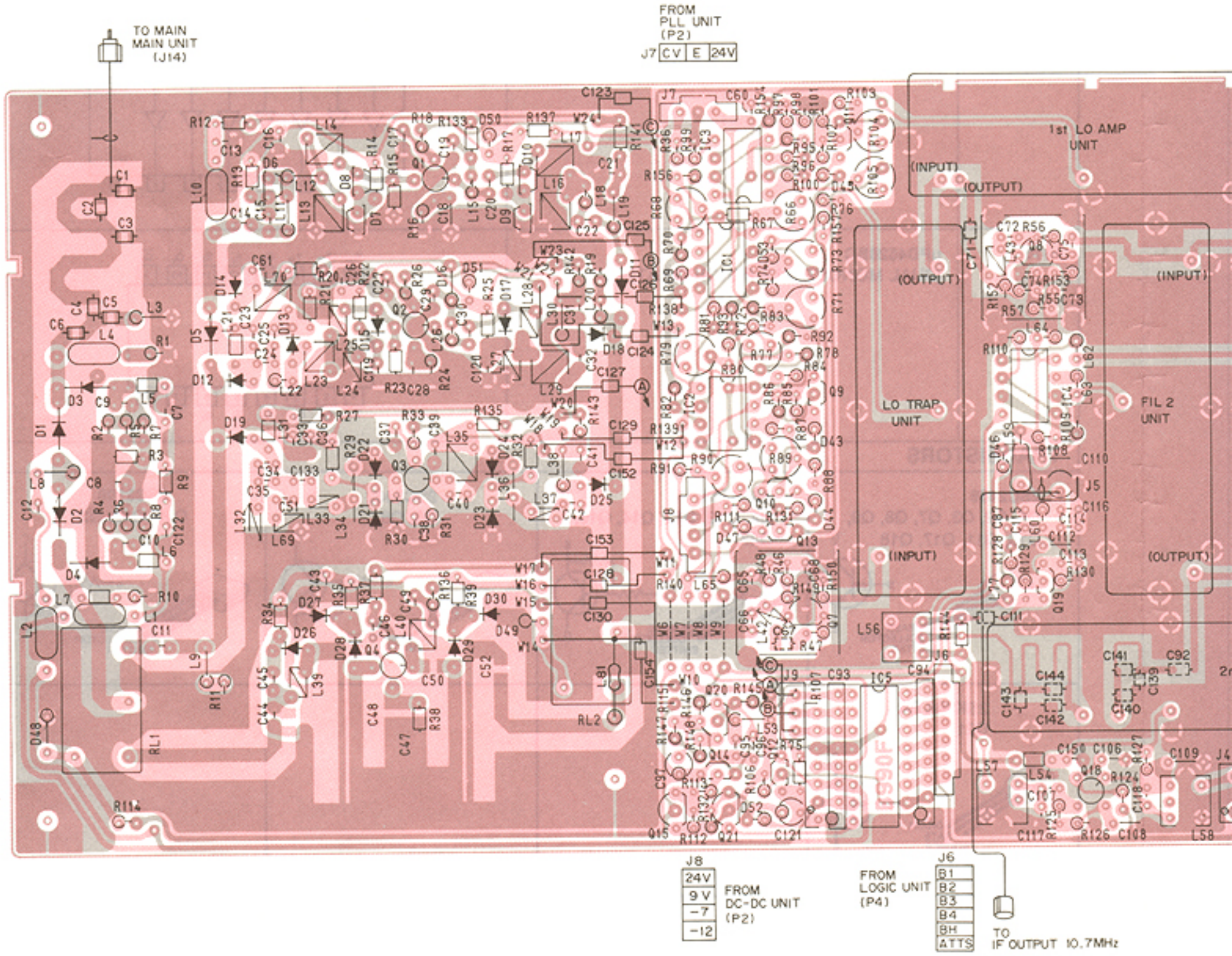

• 2nd MIX UNIT

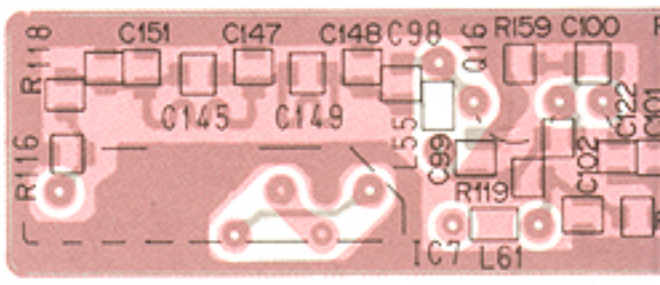

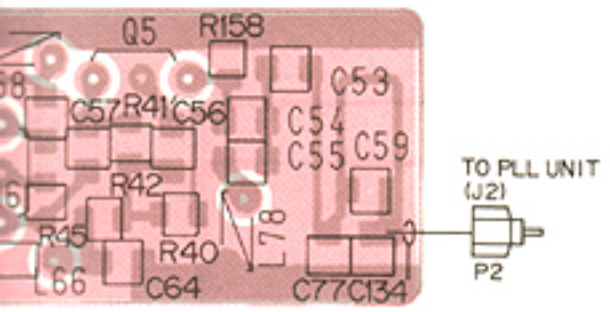

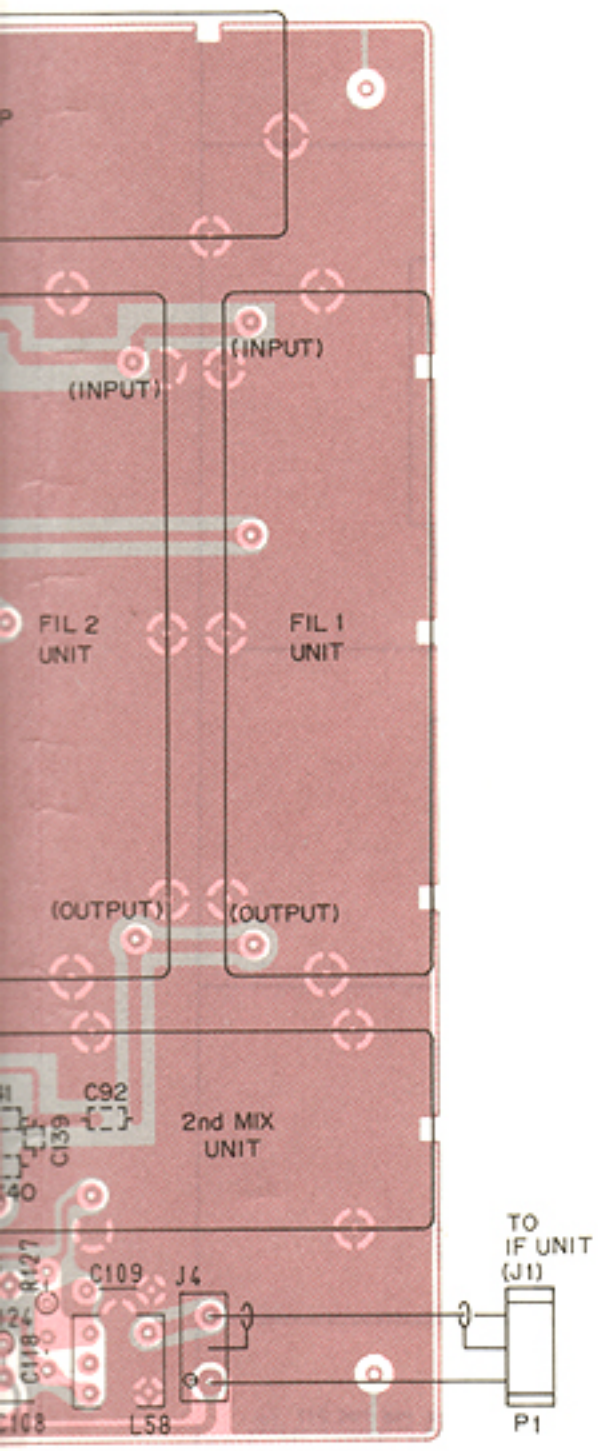

• LO TRAP UNIT

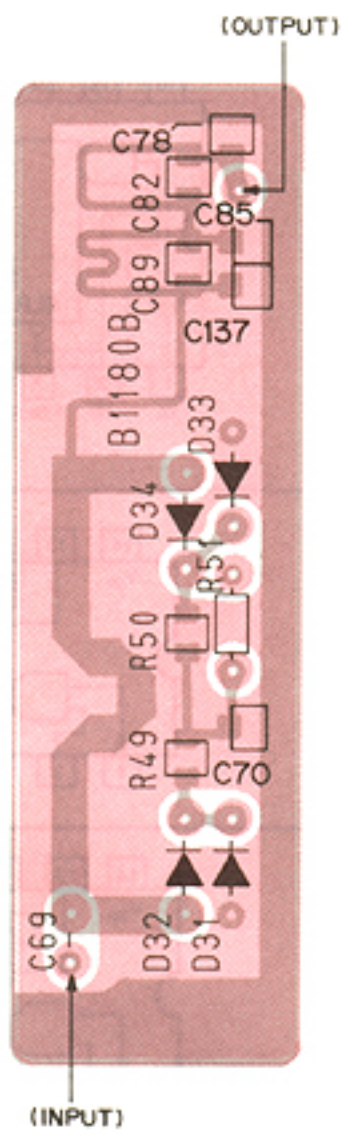

• FIL2 UNIT

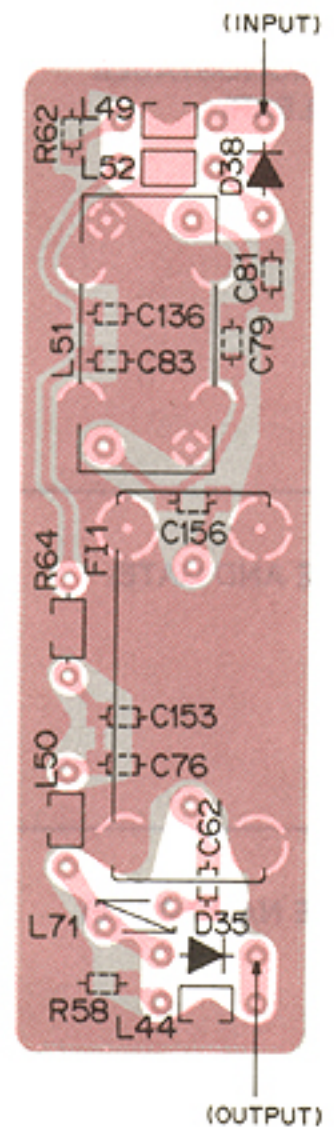

• FIL1 UNIT

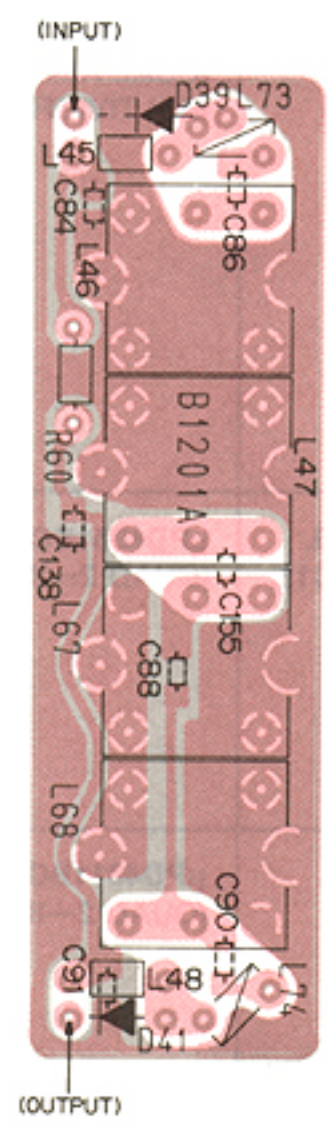

IC		
IC1	**TA78L005AP** (3-TERMINAL 5V REGULATOR)	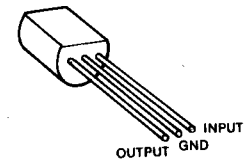
IC2, IC14	**μPD4069UBC** (HEX INVERTER)	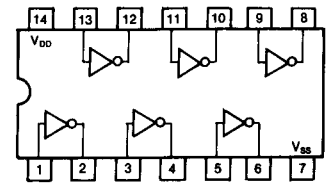
IC3	**SN74LS123** (DUAL RETRIGGERABLE MONOSTABLE MULTIVIBRATOR WITH CLEAR)	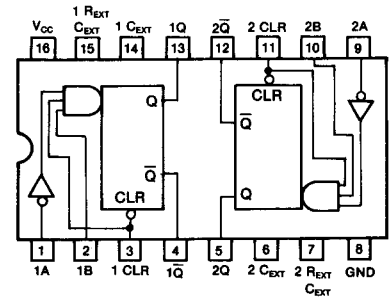
IC4, IC6, IC12, IC13, IC15	**μPD4081BC** (QUAD 2-INPUT POSITIVE AND GATE)	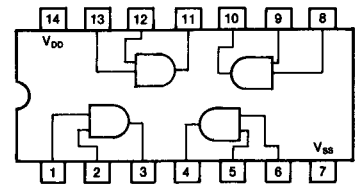
IC5	**μPD4011BC** (QUAD 2-INPUT POSITIVE NAND GATE)	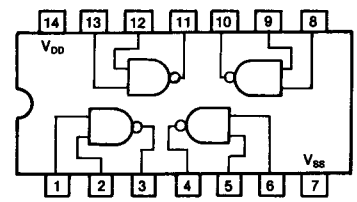
IC7	**HD63A01V1D26P** (CPU)	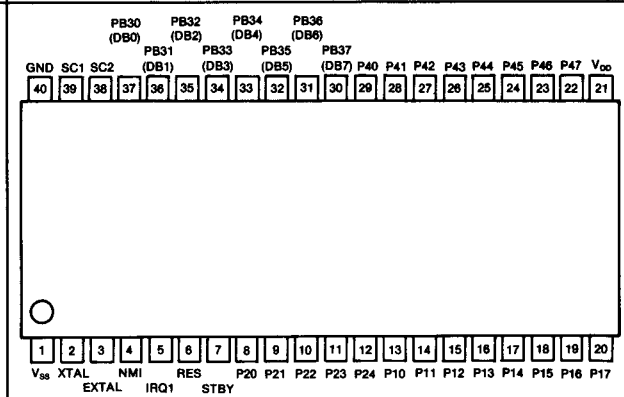
IC8	**μPD446C** (16K CMOS STATIC RAM)	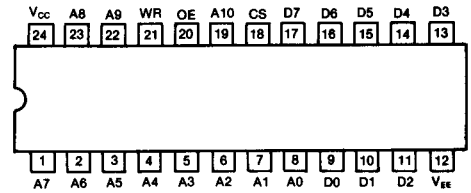

IC9, IC10	**µPD82C43C** (I/O EXPANSION PORT)	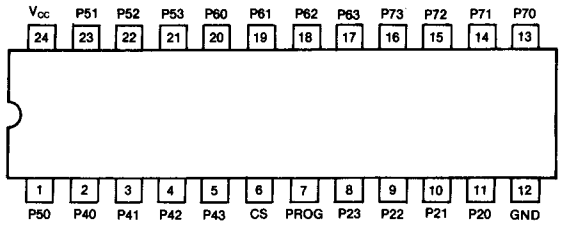
IC11	**BA618** (LED DRIVER)	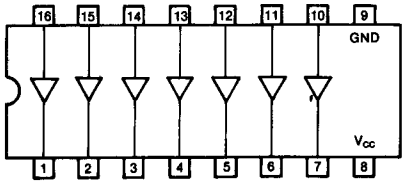
IC16	**µPD4528BC** (DUAL MONOSTABLE MULTIVIBRATOR)	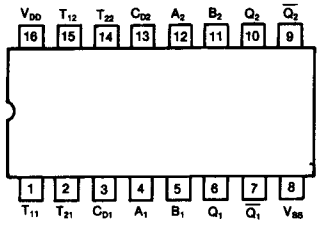

TRANSISTORS

2SC2458 Q1, Q2, Q3, Q7, Q8, Q9, Q10, Q11, Q17, Q18 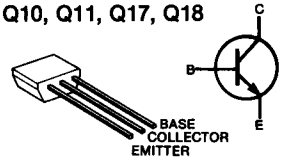	**2SA1348** Q4, Q12, Q13, Q14, Q15, Q22 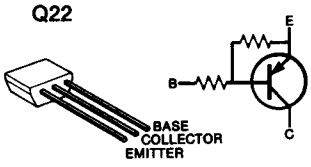	**2SC3402** Q5, Q6 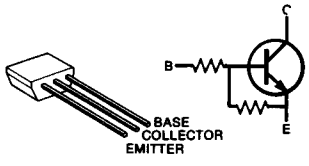	**2SC3399** Q16, Q19, Q20 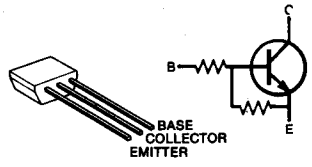
2SK30ATM Q21 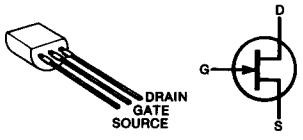			

• LOGIC UNIT

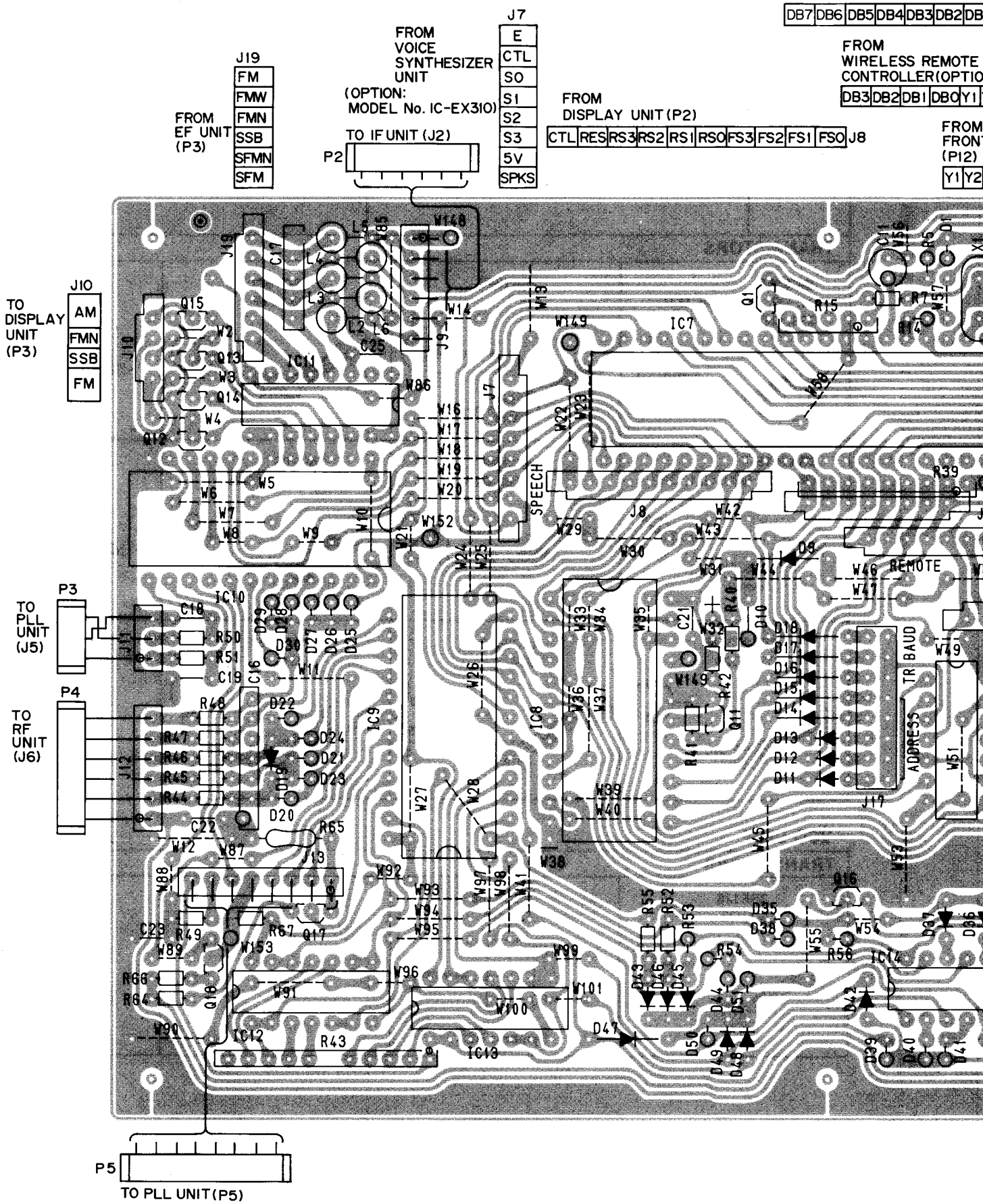
J19
FM
FMW
FMN
SSB
SFMN
SFM
FROM EF UNIT (P3)
FROM VOICE SYNTHESIZER UNIT (OPTION: MODEL No. IC-EX310)
J7
E
CTL
SO
S1
S2
S3
5V
SPKS
TO IF UNIT (J2)
P2
FROM DISPLAY UNIT (P2)
CTL RES RS3 RS2 RS1 RS0 FS3 FS2 FS1 FS0 J8
DB7 DB6 DB5 DB4 DB3 DB2 DB
FROM WIRELESS REMOTE CONTROLLER (OPTIO
DB3 DB2 DB1 DB0 Y1
FROM FRONT (P12)
Y1 Y2
J10
AM
FMN
SSB
FM
TO DISPLAY UNIT (P3)
P3
TO PLL UNIT (J5)
P4
TO RF UNIT (J6)
P5
TO PLL UNIT (P5)
SPEECH
REMOTE
ADDRESS
TR
BAUD

B5 DB4 DB3 DB2 DB1 DB0 J16

ROM
RELESS REMOTE (P1)
NTROLLER(OPTION: MODEL No. RC-12)
3 DB2 DB1 DB0 Y1 Y2 Y3 Y4 J14

8

FROM
FRONT(SW4)UNIT
(P12)
Y1 Y2 Y3 Y4 J15

J1
FROM
EF UNIT
(P7)
E
CI-V

FROM
EF UNIT(P6)
REC E J18

FROM
FRONT(SW2)UNIT
(P1)
J5 SS1 SS2 VSCS

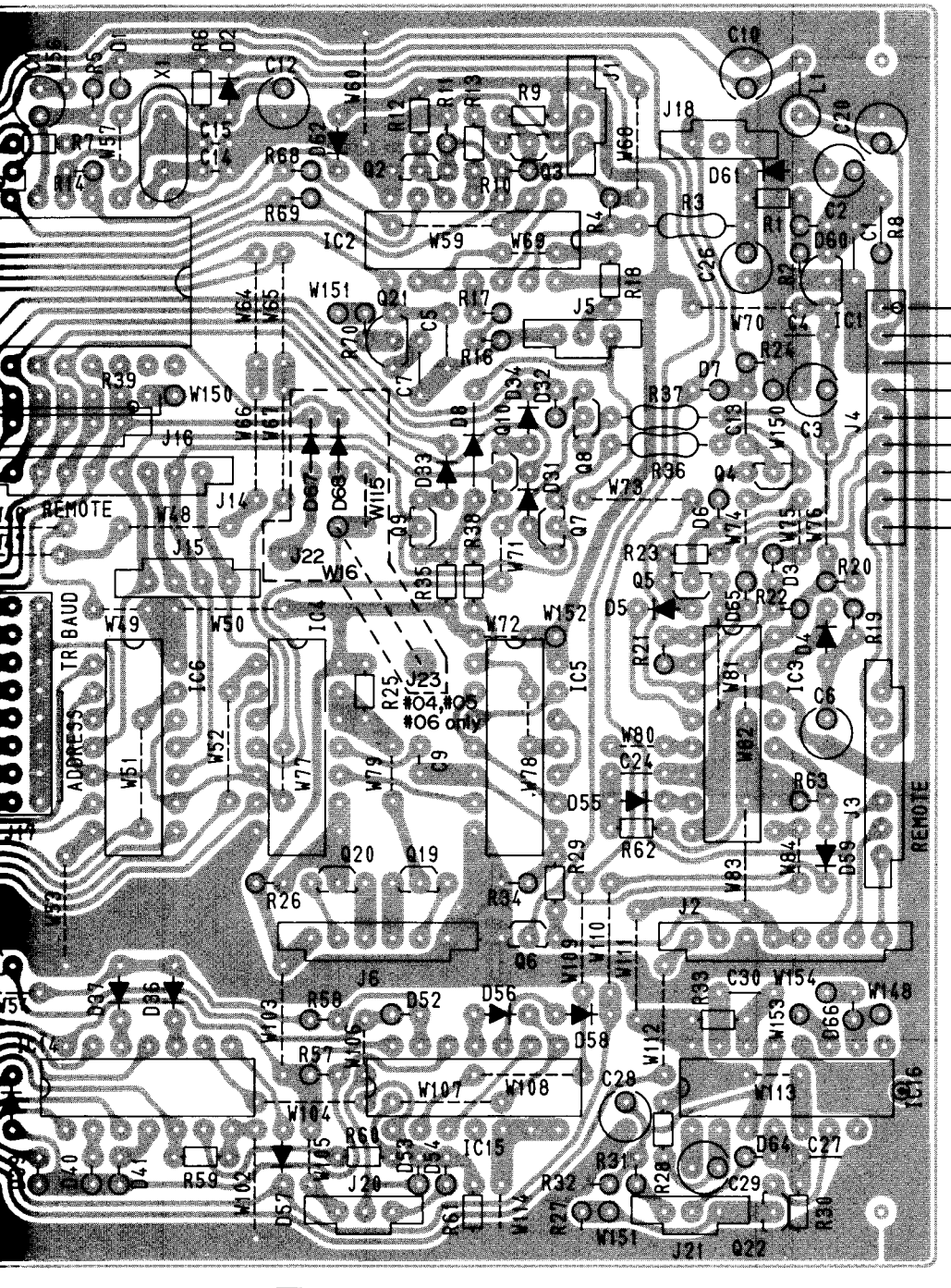

J6 5V SEN 4 SEN 3 SEN 2 SEN 1 E
FROM
SENSOR UNIT (P8)

J20 5V 1K 0.1
FROM
FRONT(SW4) UNIT
(P14)

J2 ATT5 LOCK E 5V 5V SPKS RE13 REM
FROM
FRONT(SW1) UNIT AND
FRONT(SW3) UNIT (P7)

J21 SCAN PRIO PRO
FROM
DISPLAY UNIT (P4)

7-7 PLL UNIT

• PLL UNIT

IC		
IC1	**μA78M08** (3−TERMINAL 8V REGULATOR)	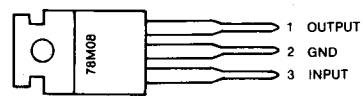
IC2	**NJM78M05A** (3−TERMINAL 5V REGULATOR)	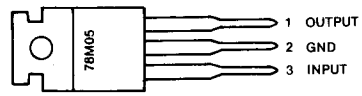
IC3	**M54929P** (DUAL MODULUS PLL IC)	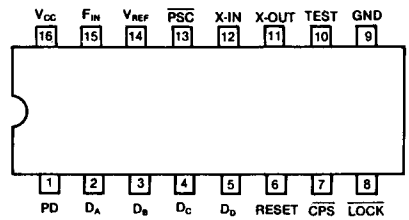
IC4	**M54466L** (1/10, 1/11 DIVIDER)	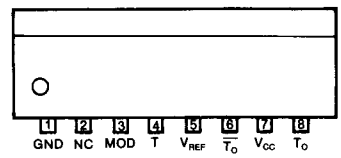
IC5, IC9, IC10	**μPC1651G** (RF WIDE BAND AMP.)	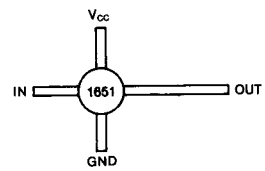
IC6, IC8	**ND487C1-3R** (DOUBLE-BALANCED MIXER)	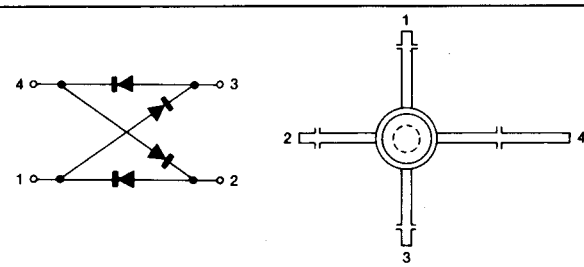
IC7	**HD10511** (PRESCALER)	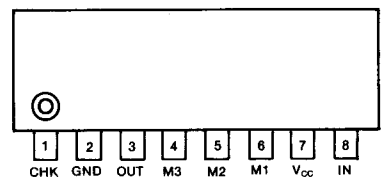

IC

IC11	**M5218L** (LOW NOISE DUAL OPERATIONAL AMPLIFIER)	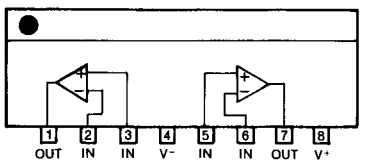

TRANSISTORS

2SC3355
Q1, Q2, Q12, Q18, Q27, Q28, Q29

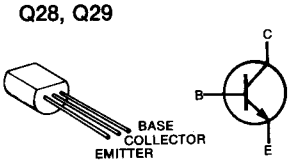

2SA1345
Q4

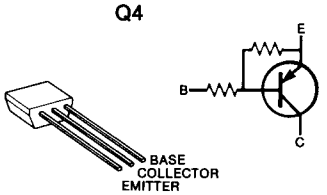

2SC1571
Q5, Q19

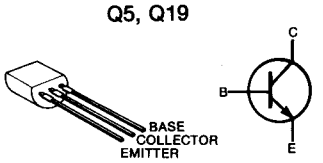

2SK162
Q6, Q13

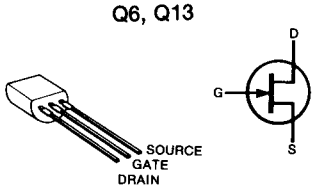

2SA1015
Q8, Q14, Q20, Q21, Q22

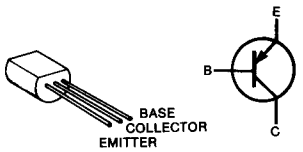

2SC3399
Q3, Q9, Q23

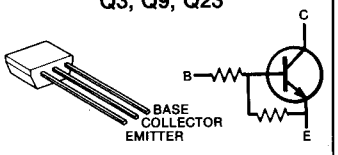

2SC763
Q10, Q16, Q25

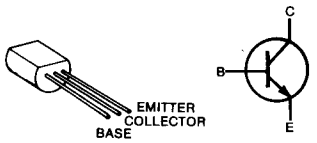

2SK241
Q11, Q17, Q26

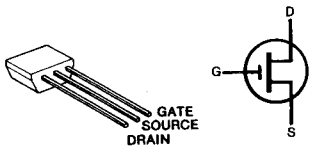

2SC383TM
Q15, Q24

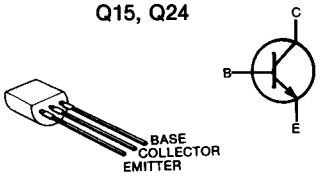

2SC3402
Q30

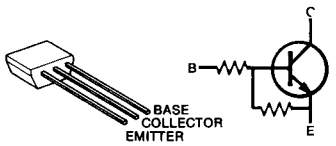

2SC2785
Q31

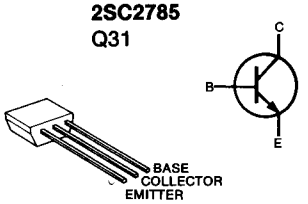

• VCO UNIT

TRANSISTORS

2SK125
Q1, Q3

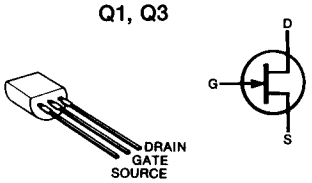

2SC3356
Q2, Q4

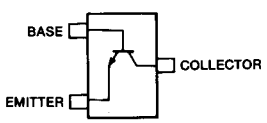

Symbol: R22

• VCO UNIT

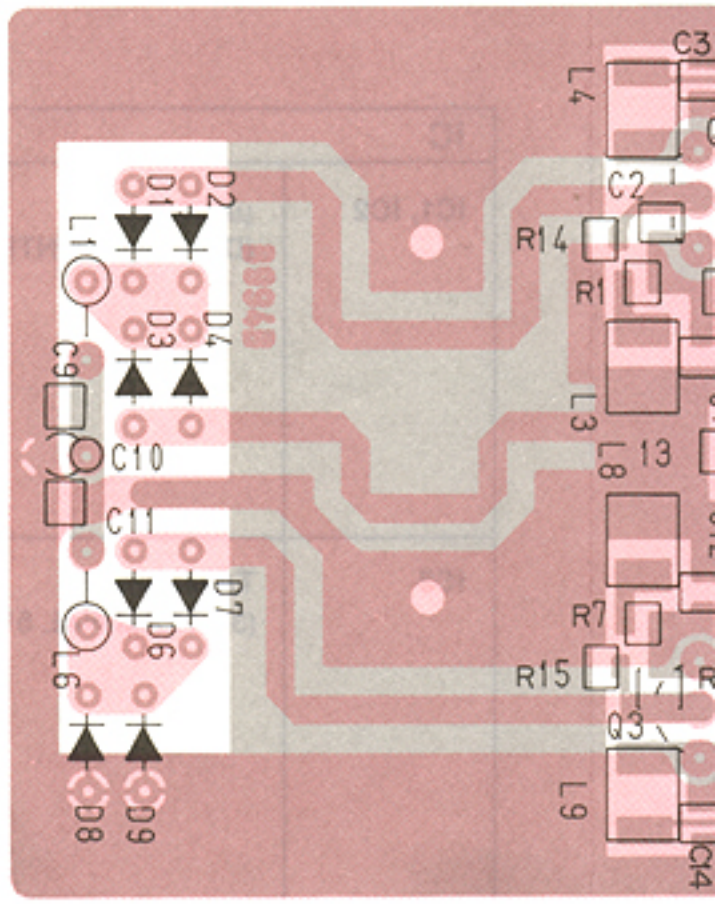

• PLL UNIT

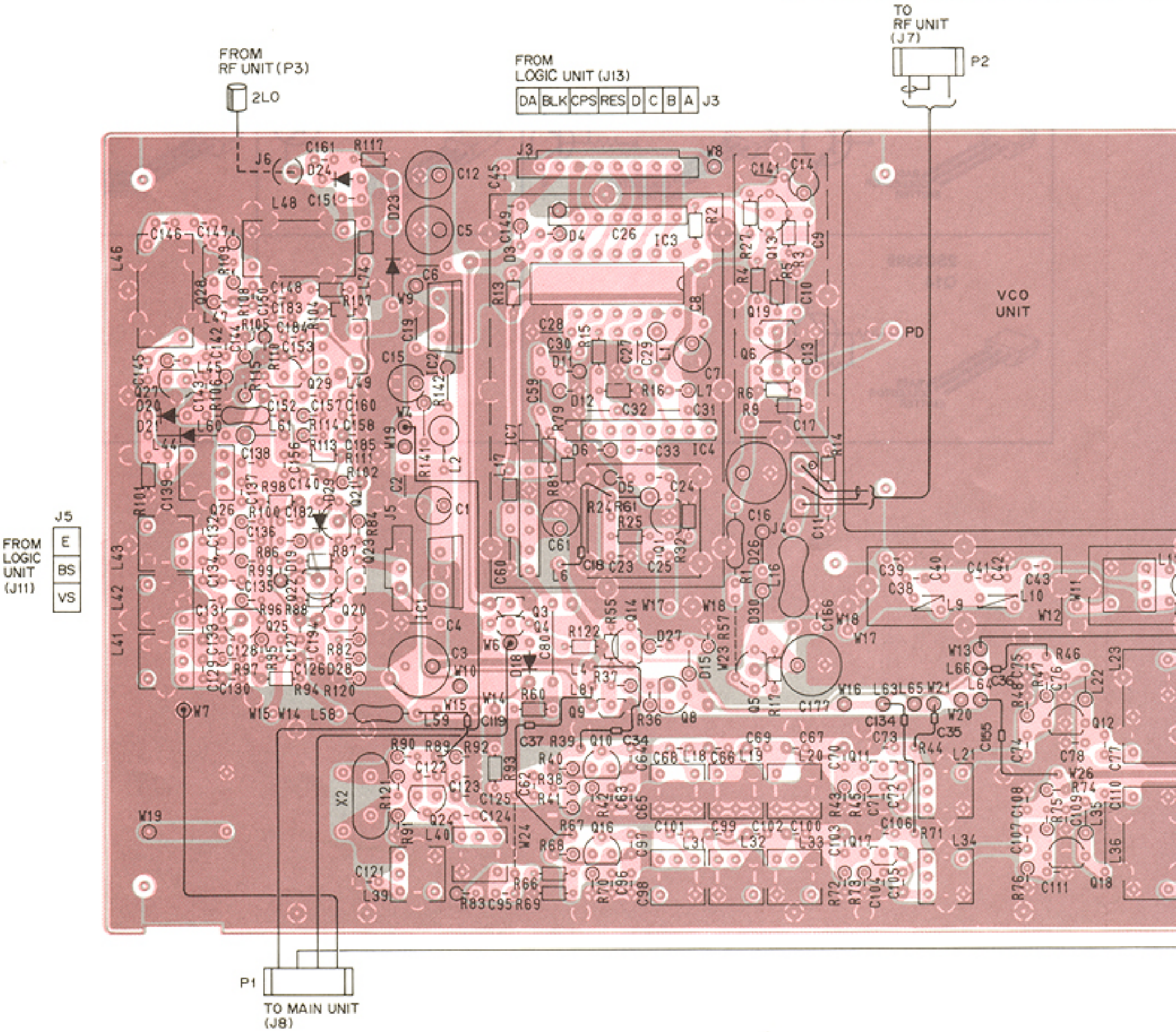

• DOUBLER UNIT

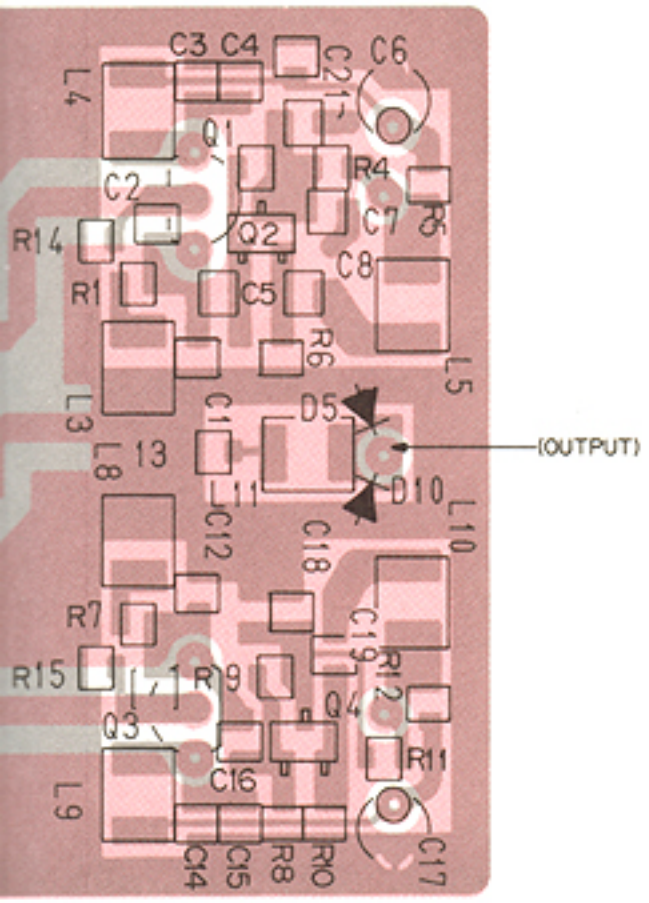

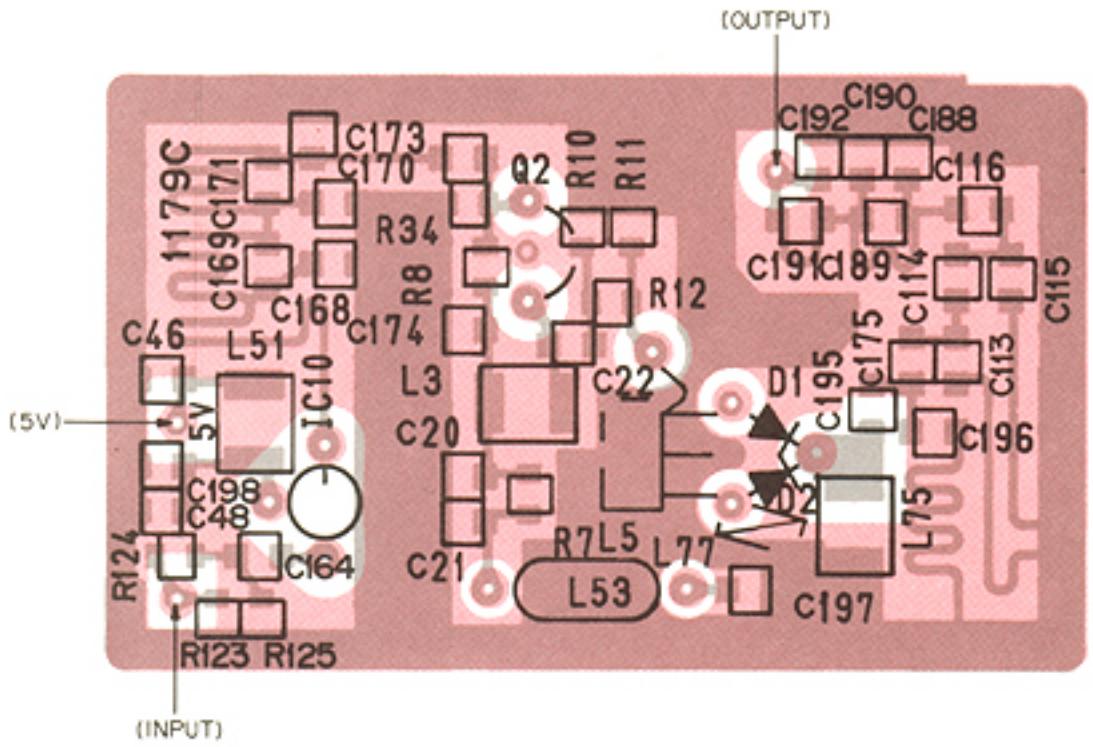

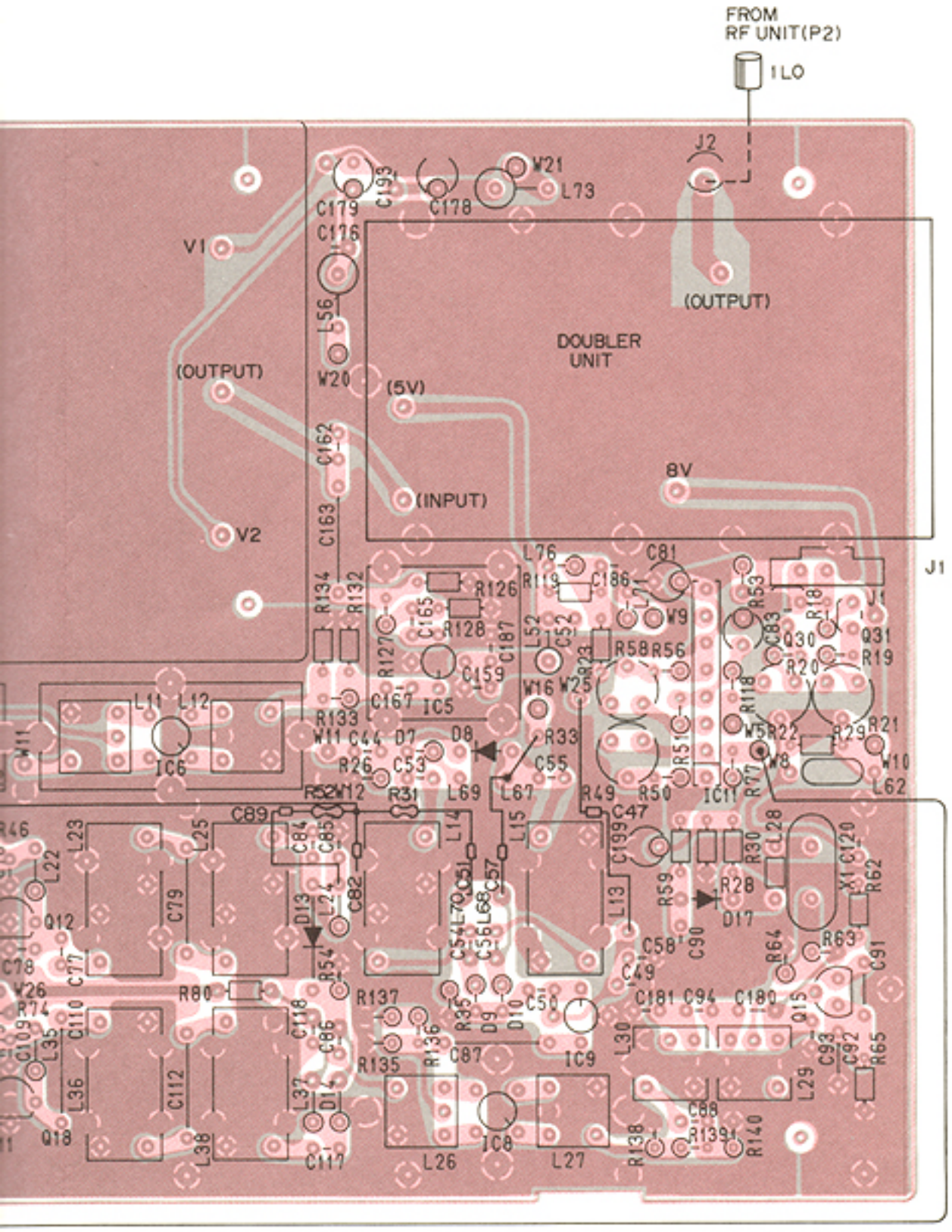

7-8 DISPLAY UNIT

IC

IC1, IC2	**μPD549C** (DISPLAY CONTROLER)	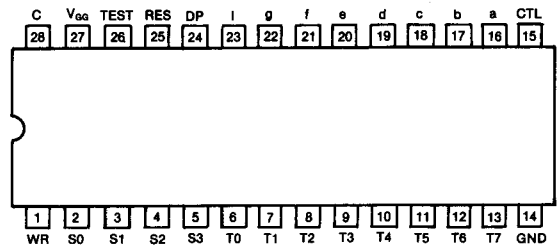
IC3	**TA78L005AP** (3-TERMINAL 5V REGULATOR)	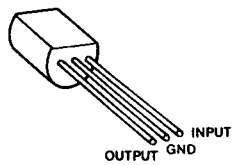

TRANSISTORS

2SC2458 Q1, Q2, Q3, Q4, Q5 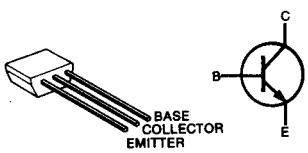	**2SA1345** Q6, Q7, Q8, Q9, Q10 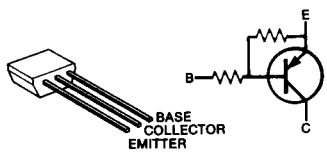	**2SC2655** Q11, Q12 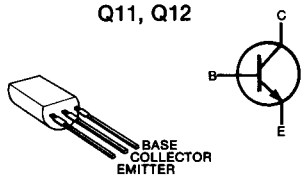	**2SA1348** Q13 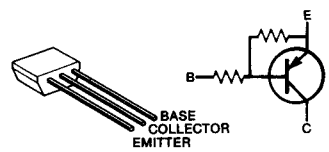
2SC3399 Q14 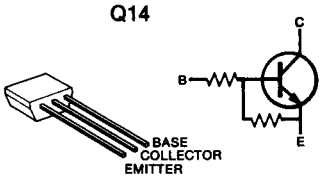			

• DISPLAY UNIT

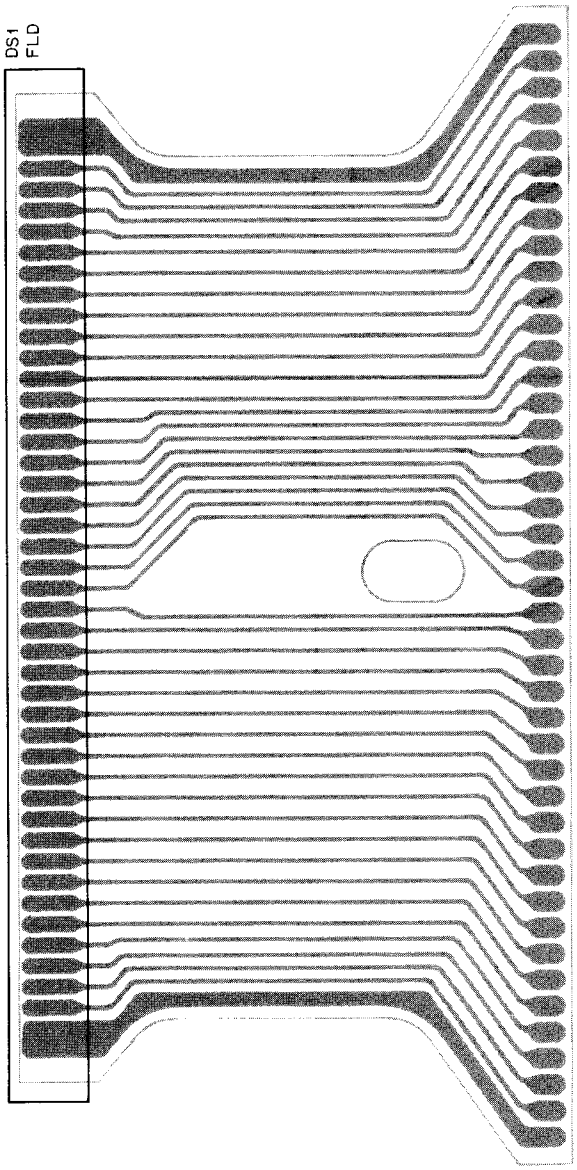

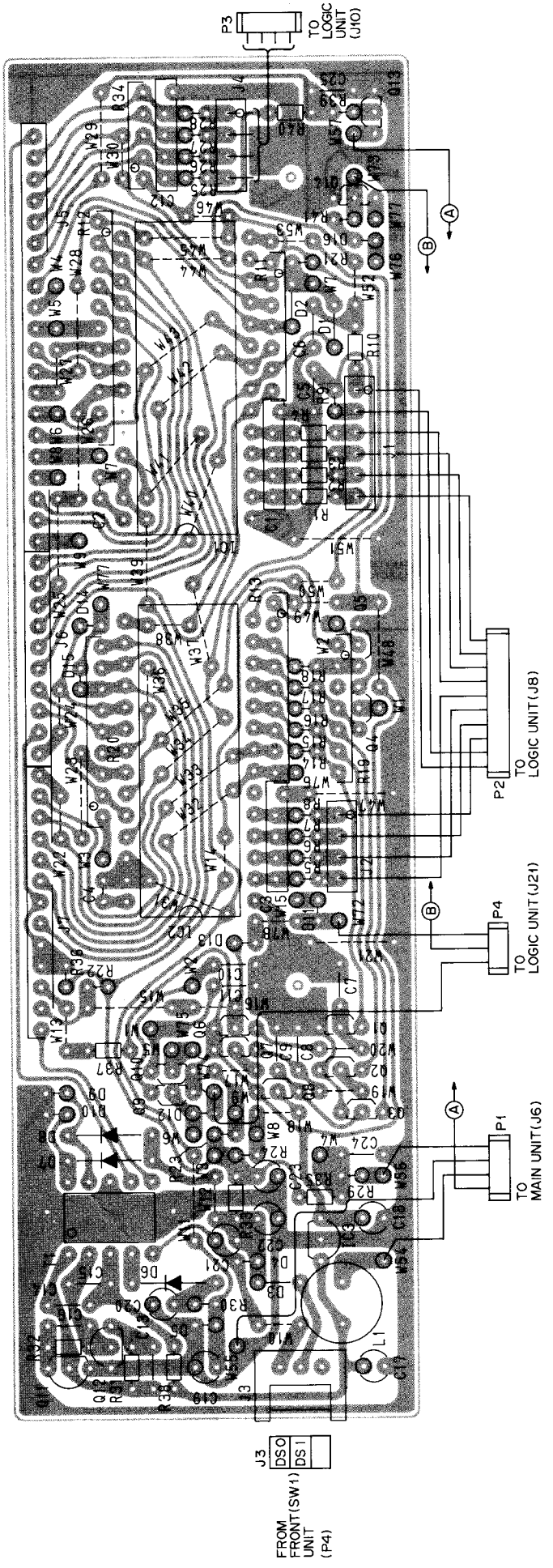

7-9 REG AND DL-REG UNITS

• REG UNIT

TRANSISTORS			
2SD880 Q1 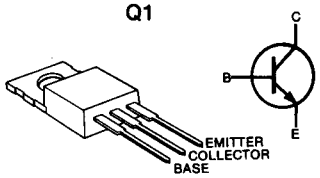	**2SA1015** Q2 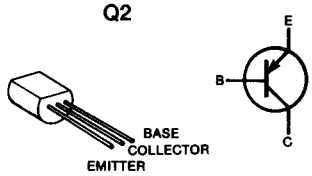	**2SC945** Q3 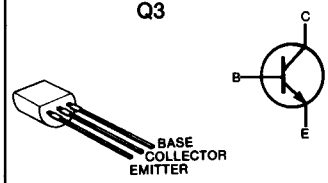	

• DL-REG UNIT

TRANSISTORS			
2SD880 Q1 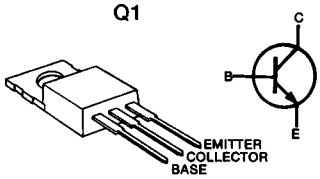	**2SA1015** Q2 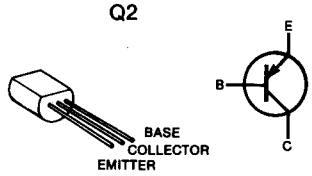	**2SC945** Q3 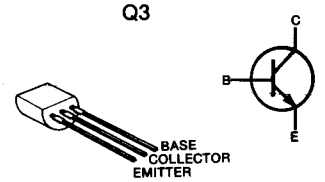	

• REG UNIT

#02	#03, #04, #05
J4 ○[○○]○ OW2	J4 ○[○○]○○ OW2
J3 ○[○○]○ OW7	J3 ○[○○]○○ OW7
117V	234V

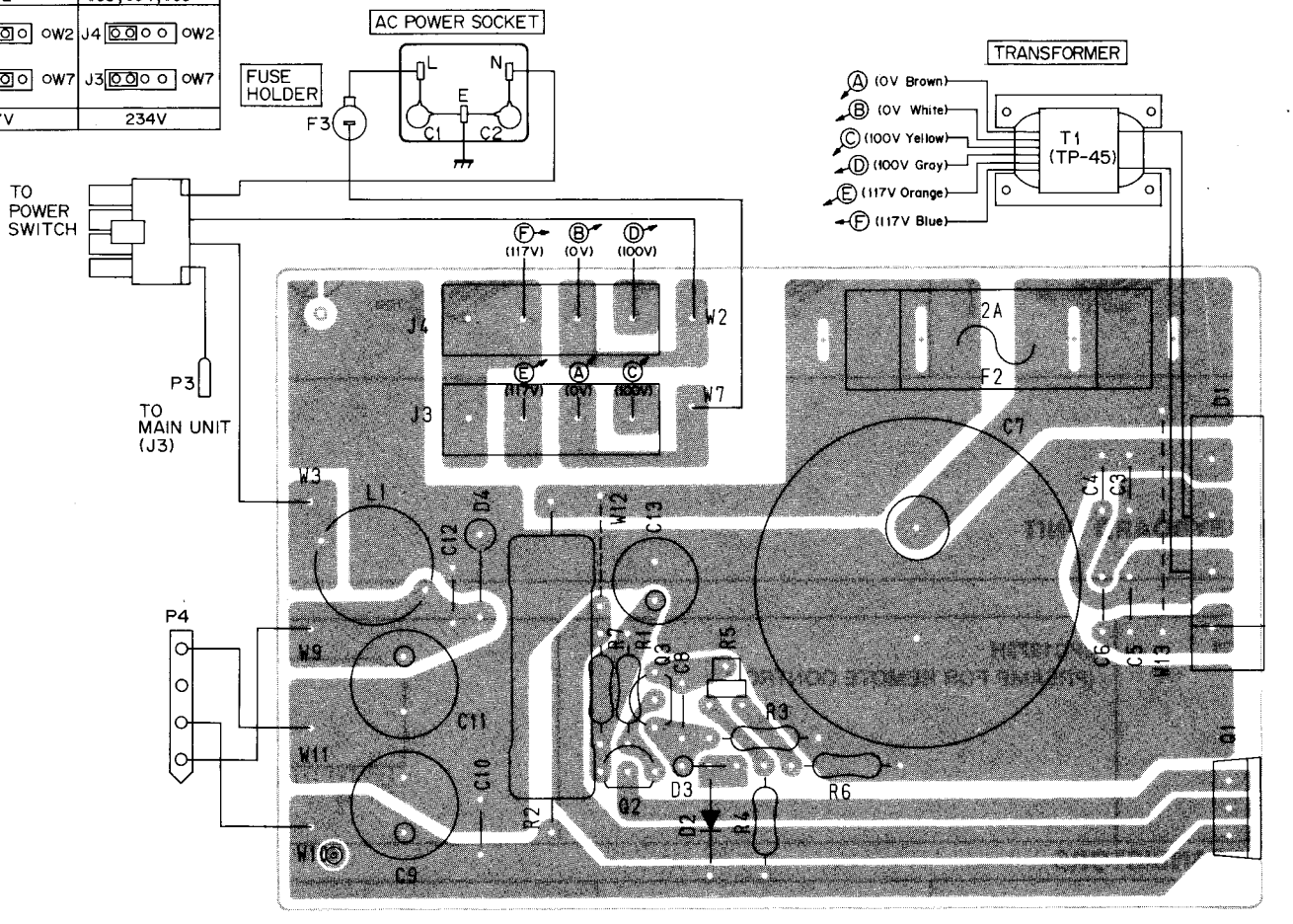

• DL-REG UNIT

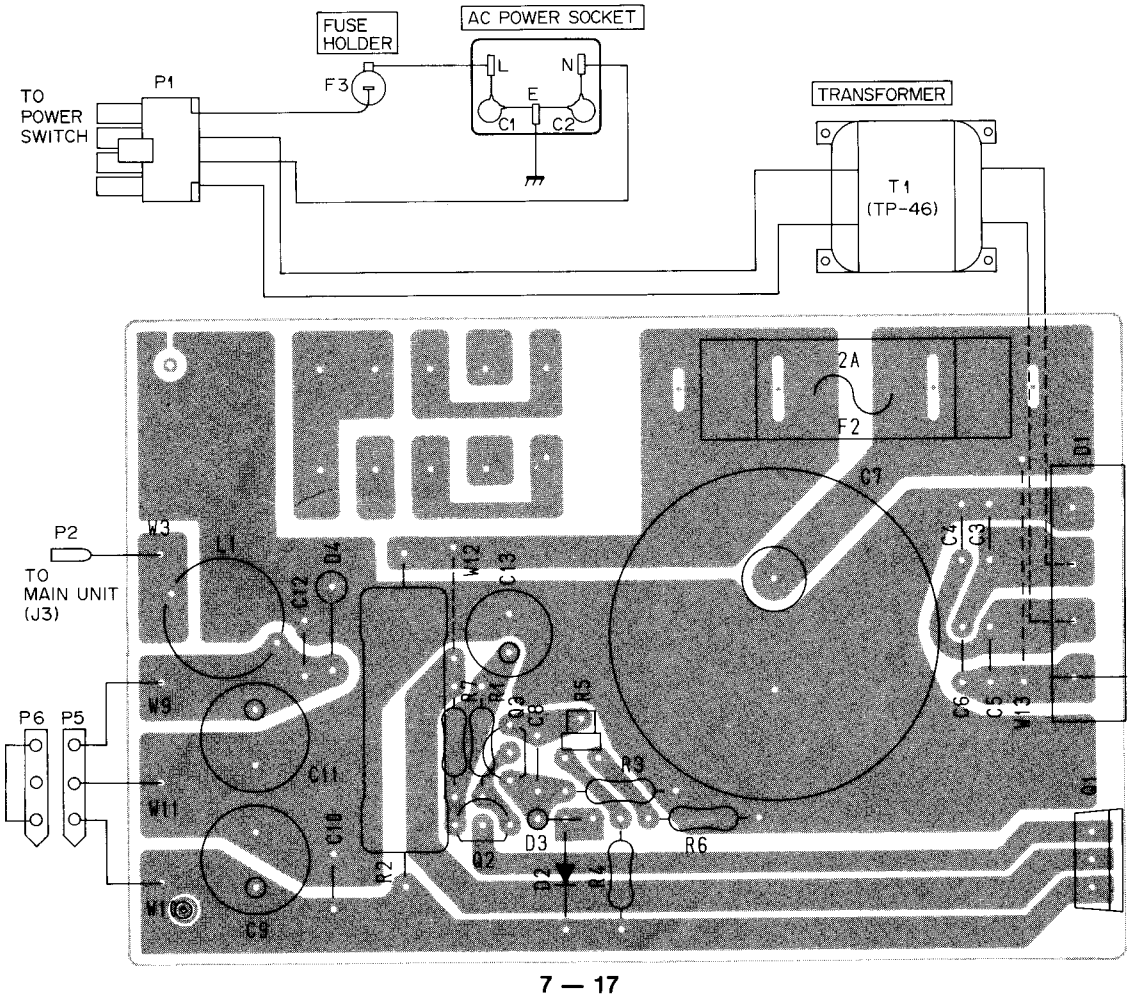

7-10 DC-DC, EF, AND KEYBOARD UNITS

• DC-DC UNIT

TRANSISTORS			
2SC2655 Q1, Q2 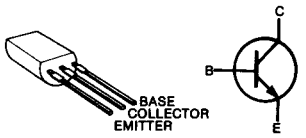	**2SD468** Q3 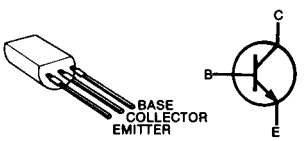	**2SB562** Q4, Q5 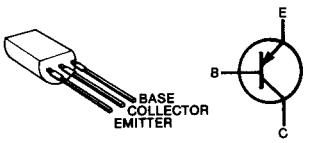	

• KEYBOARD UNIT

IC		
IC1	**μPC1373H** (PREAMP FOR REMOTE CONTROL)	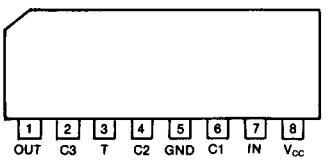

TRANSISTORS			
2SC3399 Q1 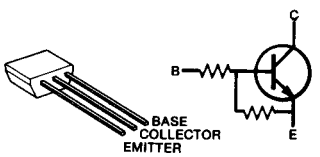			

• EF UNIT

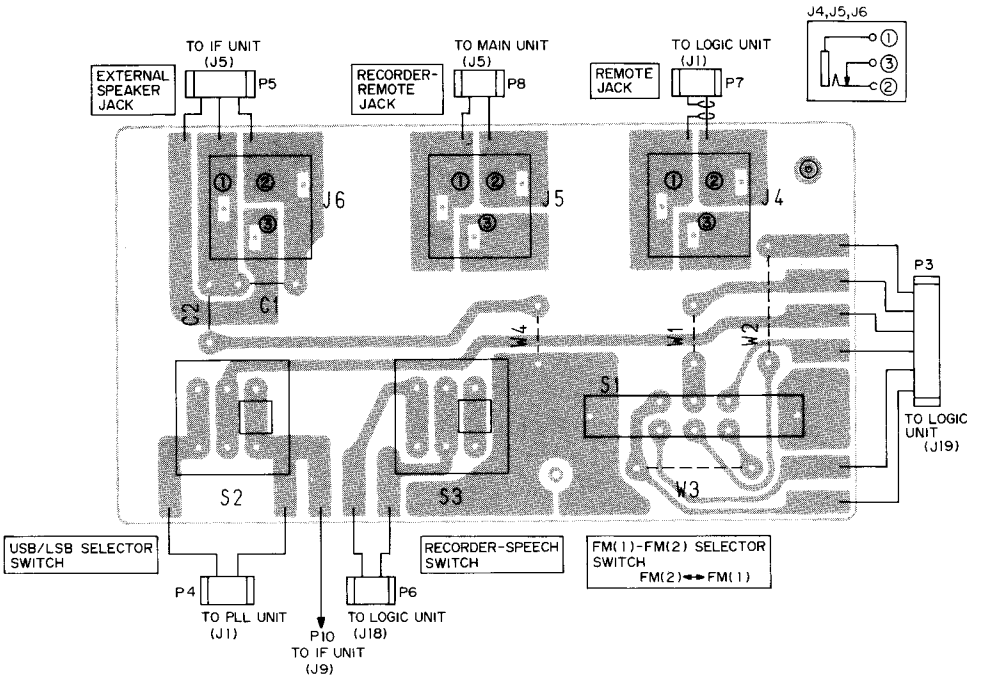

• KEYBOARD UNIT

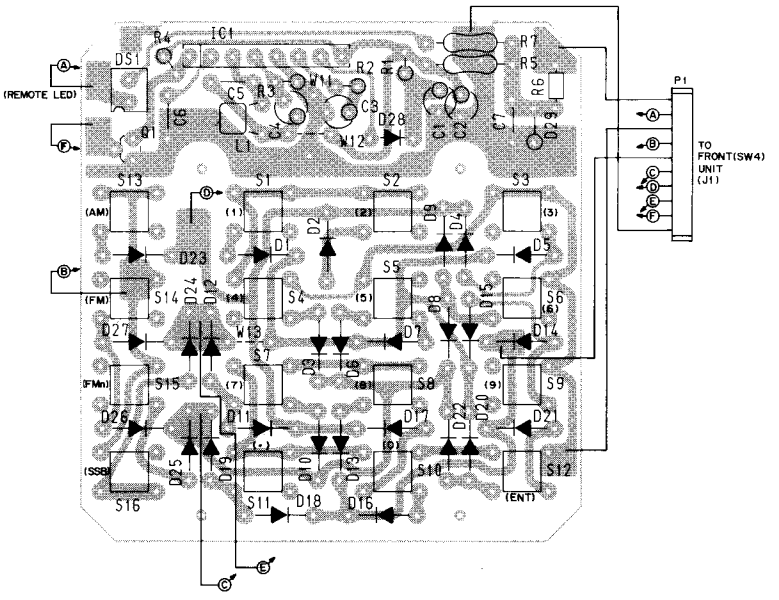

• DC-DC UNIT

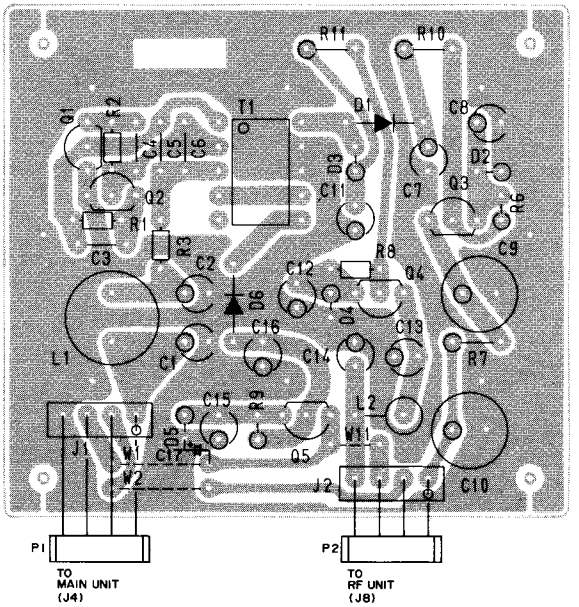

SECTION 8 PARTS LIST

[FRONT UNIT]

REF. NO.	DESCRIPTION	PART NO.
IC1	IC	μPD4081BC
Q1	Transistor	2SC3399
Q2	Transistor	2SC3399
D1	Diode	1SS133
D2	Diode	1SS133
D3	Diode	1SS133
D4	Diode	1SS133
D5	Diode	1SS133
D6	Diode	1SS133
D7	Diode	1SS133
D8	Diode	1SS133
D9	Diode	1SS133
D10	Diode	1SS133
D11	Zener	RD3.9E B2
D12	Diode	1SS133
D13	Diode	1SS133
D14	Diode	1SS133
D15	Diode	1SS133
D16	Diode	1SS133
D17	Diode	1SS133
D18	Diode	1SS133
D19	Diode	1SS133
D20	Diode	1SS133
D21	Diode	1SS133
D22	Diode	1SS133
D23	Diode	1SS133
D24	Diode	1SS133
D25	Diode	1SS133
D26	Diode	1SS133
D27	Diode	1SS133
D28	Diode	1SS133
D29	Diode	1SS133
D30	Diode	1SS133
D31	Diode	1SS133
D32	Diode	1SS133
R1	Resistor	150 R50XJ
R2	Resistor	220 ELR25
R3	Variable Resistor	K1214003W-1MB
R4	Variable Resistor	K1611008TE-20KC
R5	Variable Resistor	K162A00B8E-10KB × 2
R6	Resistor	100 R25
R7	Resistor	100 R25
R8	Resistor	100k R20
R9	Resistor	220k R20
R10	Resistor	470k R20
R11	Resistor	100k R20
R12	Resistor	220k R20
R13	Resistor	470k R20
R14	Resistor	1M R20
R15	Resistor	1M R20
C1	Ceramic	0.0047 50V
C2	Ceramic	0.0047 50V

[FRONT UNIT]

REF. NO.	DESCRIPTION	PART NO.
C3	Ceramic	0.001 50V
C4	Ceramic	0.001 50V
J1	Connector	TL-25P-10-V1
J2	Connector	TL-25P-12-V1
J3	Connector	TLB-P08H-B1
J4	Connector	TL-25P-05-V1
J5	Connector	HSJ0779-01A
J6	Connector	HLJ0035-01-010
J7	Connector	TLB-P04H-B1
J8	Connector	TLB-P03H-B1
P1	Connector	TL-25H-03-B1
P2	Connector	TL-25H-10-B1
P3	Connector	TL-25H-12-B1
P4	Connector	TL-25H-03-B1
P5	Connector	TL-25H-05-B1
P6	Connector	TL-25H-08-B1
P7	Connector	TL-25H-08-B1
P8	Connector	TL-25H-06-B1
P9	Connector	TL-25H-04-B1
P10	Connector	TL-25H-03-B1
P11	Connector	3191-04P1
P12	Connector	TL-25H-04-B1
P13	Connector	TL-25H-03-B1
P14	Connector	TL-25H-03-B1
P15	Connector	001T410
DS1	Lamp	BQ044-32582A
ME1	Meter	ME-18 C-01653
S1	Switch	SPUT19168A (PRIO)
S2	Switch	SPUT19168A (PROG)
S3	Switch	SPUT19168A (MEMORY)
S4	Switch	SPUT19168A (SEL-M)
S5	Switch	SPUT19168A (MODE)
S6	Switch	SPUT19168A (AUTO-M)
S7	Switch	SPUT19168A (SEL-SET)
S8	Switch	SPUT19168A (PROG-SET)
S9	Switch	SPUT19168A (PRIO-SET)
S10	Switch	SPUT19168A (CL)
S11	Switch	SPUT19167A (REMOTE)
S12	Switch	SPUT19167A (ATT)
S13	Switch	SPUT19167A (NB)
S14	Switch	SPUT19066A (DIMMER)
S15	Switch	SPUT19066A (DIAL LOCK)
S16	Switch	SPUT19168A (SPEECH)
S17	Switch	SPUT19168A (M-SET)
S18	Switch	SPUT19066A (1GHz)
S19	Switch	SRBU14 (TUNING STEP)
S20	Switch	SPPJ22114A (VSC)
S21	Switch	SPPJ22114A (METER)

[FRONT UNIT]

REF. NO.	DESCRIPTION	PART NO.
S22	Switch	SRBU16 (TS)
S23	Switch	SPPJ22588A (WRITE)
S24	Switch	SPPJ22588A (CLEAR)
S25	Switch	SRBU2C (Mch)
S26	Switch	SDDSA3159A (POWER)
EP1	Encoder	RABH10J01A
EP2	P.C. Board	B-998B
EP3	P.C. Board	B-999B
EP4	P.C. Board	B-1000B
EP5	P.C. Board	B-1001A
W1	Jumper	JPW-02A
W2	Jumper	JPW-02A
W3	Jumper	IPS-1041-4
W4	Jumper	JPW-02A
W5	Jumper	JPW-02A
W6	Jumper	JPW-02A
W7	Jumper	JPW-02A
W8	Jumper	JPW-02A
W9	Jumper	JPW-02A
W12	Wire	23/01/280/C01/W04
W13	Wire	23/02/280/C01/W02
W14	Wire	23/03/280/C01/W02
W15	Wire	23/01/250/C01/W02
W16	Wire	23/02/220/C01/W03
W17	Wire	23/03/220/C01/W03
W18	Wire	23/04/230/C01/W02
W19	Wire	23/05/230/C01/W02
W20	Wire	23/06/230/C01/W02
W21	Wire	23/07/270/C01/W02
W22	Wire	23/08/270/C01/W02
W23	Wire	23/09/230/C01/W02
W24	Wire	23/00/230/C01/W02
W25	Wire	23/01/230/C01/W02
W26	Wire	23/00/230/C01/W02
W27	Wire	23/09/230/C01/W02
W28	Wire	23/08/230/C01/W02
W29	Wire	23/07/230/C01/W02
W30	Wire	23/06/230/C01/W02
W31	Wire	23/05/230/C01/W02
W32	Wire	23/04/230/C01/W02
W33	Wire	23/03/230/C01/W02
W34	Wire	23/02/230/C01/W02
W35	Wire	23/01/230/C01/W02
W36	Wire	23/00/230/C01/W02
W37	Wire	23/02/230/C01/W02
W38	Wire	23/03/230/C01/W02
W39	Wire	23/01/090/C01/W02
W40	Wire	23/02/090/C01/W02
W41	Wire	23/03/090/C01/W02
W42	Wire	23/04/090/C01/W02
W43	Wire	23/05/090/C01/W02
W44	Wire	23/00/340/C01/C22
W45	Wire	23/01/340/C01/C22
W46	Wire	23/02/340/C01/C22
W47	Wire	23/03/340/C01/C22
W48	Wire	23/04/340/C01/C22
W49	Wire	23/05/340/C01/C22
W50	Wire	23/06/340/C01/C22
W51	Wire	23/07/340/C01/C22
W52	Wire	23/01/260/C01/W02

[FRONT UNIT]

REF. NO.	DESCRIPTION	PART NO.
W53	Wire	23/02/200/C01/W02
W54	Wire	23/03/260/C01/W02
W55	Wire	23/04/200/C01/W02
W56	Wire	23/05/260/C01/W02
W57	Wire	23/06/260/C01/W02
W58	Wire	23/07/260/C01/W02
W59	Wire	23/08/200/C01/W02
W60	Wire	23/01/170/C01/W02
W61	Wire	23/02/170/C01/W02
W62	Wire	23/03/170/C01/W02
W63	Wire	23/04/170/C01/W02
W64	Wire	23/05/170/C01/W02
W65	Wire	23/06/170/C01/W02
W66	Wire	23/01/350/C01/W02
W67	Wire	23/02/350/C01/W02
W68	Wire	51/02/350/C01A/W11A
W69		A A
W70	Wire	23/02/380/C01/W02
W71	Wire	23/03/380/C01/W02
W72	Wire	13/01/050/A07/W02
W73	Wire	13/01/050/A07/W02
W74	Wire	13/06/050/A07/W02
W75	Wire	13/06/050/A07/W02
W76	Wire	23/01/230/C01/C22
W77	Wire	23/02/230/C01/C22
W78	Wire	23/03/230/C01/C22
W79	Wire	23/04/230/C01/C22
W80	Wire	23/01/400/C01/W02
W81	Wire	23/03/400/C01/W02
W82	Wire	23/01/230/C01/W02
W83	Wire	23/02/230/C01/W02
W84	Wire	23/03/230/C01/W02
W85	Wire	23/09/300/C32G/W02
W86	Wire	23/09/130/W03/W02
W87	Wire	23/00/130/W02/W02
W88	Wire	23/04/110/C22/W02
W89	Wire	23/06/110/C22/W02
W90	Wire	23/07/110/C22/W02
W91	Wire	23/01/080/W02/W02
W92	Wire	23/02/080/W02/W02
W93	Wire	23/03/080/W02/W02

[MAIN UNIT]

REF. NO.	DESCRIPTION	PART NO.
IC1	IC	NJM4558D
IC2	IC	NJM4558D
IC3	IC	LA2600
IC4	IC	NJM4558D
IC5	IC	NJM4558D
IC6	IC	NJM7809A
IC7	IC	M5218L
IC8	IC	μPC1241H
IC9	DBM	DM-88XB
IC10	IC	NJM78L09A
Q1	FET	2SK30ATM Y
Q2	Transistor	2SC2785 FF/EF
Q3	Transistor	2SA1348
Q4	Transistor	2SA1348
Q5	Transistor	2SC3402
Q6	Transistor	2SC3399
Q7	Transistor	2SC3399
Q9	Transistor	2SC2785 FF/EF
Q10	Transistor	2SC2785 FF/EF
Q11	Transistor	2SA1048 Y/GR
Q13	Transistor	2SC945 P/K
Q14	Transistor	2SC383TM
Q15	FET	2SK241 GR
Q16	Transistor	2SC2026
Q17	Transistor	2SC3399
Q18	Transistor	2SC2785 FF/EF
Q19	Transistor	2SC3399
D1	Diode	1SS53
D2	Diode	1SS53
D3	Diode	1SS53
D5	Diode	1SS53
D7	Diode	1SS53
D8	Diode	1SS53
D9	Diode	1SS53
D10	Diode	1SS53
D11	Diode	1SS53
D12	Diode	1SS53
D14	Diode	1SS53
D15	Diode	1SS53
D16	Diode	1SS53
D17	Diode	1SS53
D18	Diode	1SS53
D19	Diode	1SS53
D20	Diode	1SS53
D21	Diode	1SS53
D22	Diode	1SS53
D23	Diode	1SS53
D24	Diode	1SS53
D25	Diode	1SS53
D26	Diode	1N4002
D27	Diode	1SS53
D28	Diode	1SS53
D29	Diode	1SS53
D30	Diode	1S953
X1	Crystal	CR160

[MAIN UNIT]

REF. NO.	DESCRIPTION	PART NO.	
L1	Coil	LAL04NA 102K	
L2	Coil	LB-184	
L3	Coil	LS-127	
L4	Coil	LS-127	
L5	Coil	LS-127	
L6	Coil	LS-230A	
L7	Coil	LA-232	
L8	Coil	252MX-1553A	
L9	Coil	LAL02KR 101K	
L10	Coil	LAL02KR 101K	
L11	Coil	LA-232	
L12	Coil	LA-232	
L13	Coil	LA-189	
L14	Coil	IPS-1041-4	
R1	Resistor	10k	R20
R2	Resistor	33k	ELR20
R3	Resistor	3.3k	ELR20
R4	Resistor	100k	R20
R5	Resistor	1.5k	R20
R6	Resistor	470k	ELR20
R7	Resistor	15k	R20
R8	Resistor	470k	R20
R9	Resistor	15k	ELR20
R10	Resistor	15k	R20
R11	Resistor	470k	ELR20
R12	Resistor	12k	R20
R13	Resistor	10k	ELR20
R14	Resistor	1k	ELR20
R15	Resistor	8.2k	ELR20
R16	Resistor	470k	ELR20
R17	Resistor	10k	R20
R18	Resistor	10k	ELR20
R19	Resistor	330	R20
R20	Resistor	560k	ELR20
R21	Resistor	560k	ELR20
R22	Resistor	470k	ELR20
R23	Resistor	470k	ELR20
R24	Resistor	220k	ELR20
R25	Resistor	1M	ELR20
R26	Resistor	100	ELR20
R27	Resistor	68k	R20
R28	Resistor	47k	R20
R29	Trimmer	RHB0CS42BA 47K	
R30	Resistor	47k	R20
R31	Resistor	150k	ELR20
R32	Trimmer	RHB0CN40YA 33K	
R33	Resistor	2.2k	ELR20
R34	Resistor	10k	ELR20
R35	Resistor	4.7k	R25
R36	Resistor	15k	ELR20
R37	Trimmer	RHB0CS32UA 4.7K	
R38	Resistor	4.7k	ELR20
R39	Resistor	56k	ELR20
R40	Resistor	100	R20
R41	Resistor	680k	ELR20
R42	Resistor	12k	R20
R43	Resistor	10k	ELR20
R44	Resistor	100	ELR20
R45	Resistor	10k	R20
R46	Resistor	330	R20
R47	Resistor	10k	R20
R48	Resistor	100	ELR20

[MAIN UNIT]

REF. NO.	DESCRIPTION	PART NO.
R49	Resistor	10k ELR20
R50	Resistor	1k ELR20
R51	Trimmer	RHB0C1431A 10K
R52	Resistor	10M ERC14GJ
R53	Resistor	100 R20
R54	Trimmer	RHB0CS42BA 47K
R55	Resistor	10M ERC14GJ
R56	Resistor	1k ELR20
R57	Resistor	4.7k ELR20
R58	Resistor	10k ELR20
R59	Resistor	10k ELR20
R60	Resistor	10k ELR20
R61	Resistor	1.2M R20
R62	Resistor	10k ELR20
R63	Resistor	100k R20
R64	Resistor	33k ELR20
R65	Resistor	68k R20
R66	Trimmer	RH0651C15J1UA 100K
R67	Resistor	100k R25
R68	Resistor	100 ELR20
R69	Resistor	10k ELR20
R70	Resistor	10k ELR20
R71	Resistor	10k ELR20
R72	Resistor	3.3k R20
R73	Resistor	100k ELR20
R74	Resistor	100k R25
R76	Trimmer	RHB0CS32UA 4.7K
R77	Resistor	1k ELR20
R78	Resistor	47k ELR20
R79	Resistor	10k ELR20
R80	Resistor	1k ELR20
R81	Resistor	4.7k ELR20
R82	Resistor	1k ELR20
R83	Resistor	100 R20
R84	Resistor	47k ELR20
R85	Resistor	100 ELR20
R86	Resistor	100 ELR20
R87	Resistor	1k ELR20
R88	Resistor	100 ELR20
R89	Resistor	10k ELR20
R90	Resistor	10 R20
R92	Chip	15 MCR10
R93	Resistor	2.2k ELR20
R94	Resistor	220k R20
R95	Resistor	10k R20
R96	Resistor	470 R25
R97	Resistor	15k ELR20
R98	Resistor	8.2k R20
R99	Resistor	1k R20
R100	Resistor	15 ELR20
R101	Resistor	2.2 R25
R102	Chip	270 MCR10
R103	Chip	270 MCR10
R104	Resistor	10 ELR20
R106	Resistor	1.2k ELR20
R109	Resistor	1k R20
R110	Resistor	10k ELR20
R111	Resistor	8.2k R25
R112	Resistor	22k ELR20
R113	Resistor	4.7k R20
R114	Resistor	4.7k R20
R115	Resistor	15k ELR20
R116	Resistor	2.2k ELR20
R117	Resistor	10k ELR20

[MAIN UNIT]

REF. NO.	DESCRIPTION	PART NO.
R118	Thermistor	23D29
R119	Resistor	1M R20
R120	Resistor	4.7k R25
R121	Resistor	470 ELR20
R122	Resistor	1.5k ELR20
R123	Resistor	27k R20
R124	Trimmer	RH0651CS4J25A 47K
R125	Resistor	4.7k R20
R126	Resistor	100k ELR20
R127	Resistor	1k ELR20
R128	Resistor	33k ELR20
R129	Thermistor	33D28
R130	Resistor	3.3k ELR20
R131	Resistor	100k R25
R132	Thermistor	45D26NL-CM
R133	Chip	150 MCR10
R134	Resistor	22k R20
R135	Resistor	22k R20
C1	Electrolytic	0.47 50V RC2
C2	Electrolytic	47 10V
C3	Electrolytic	0.47 50V RC2
C4	Barrier Layer	0.047 25V
C5	Ceramic	0.0047 50V
C6	Mylar	0.01 50V
C7	Mylar	0.0047 50V
C8	Mylar	0.0047 50V
C9	Mylar	0.0047 50V
C10	Ceramic	220P 50V
C11	Mylar	0.01 50V
C12	Electrolytic	10 16V
C13	Electrolytic	10 16V RC2
C14	Ceramic	220P 50V
C15	Electrolytic	4.7 25V RC2
C16	Electrolytic	10 16V RC2
C17	Electrolytic	10 16V RC2
C18	Electrolytic	10 16V RC2
C19	Electrolytic	0.47 50V BP
C20	Electrolytic	0.47 50V RC2
C21	Barrier Layer	0.1 16V
C22	Electrolytic	0.47 50V RC2
C23	Mylar	0.001 50V
C24	Barrier Layer	0.1 16V
C26	Electrolytic	10 16V
C27	Ceramic	0.0047 50V
C28	Ceramic	18P 50V CH
C29	Dip Mica	47P 50V
C30	Dip Mica	39P 50V
C31	Ceramic	5P 50V
C32	Ceramic	0.001 50V
C33	Electrolytic	47 16V
C34	Electrolytic	10 16V RC2
C35	Ceramic	0.0047 50V
C36	Electrolytic	10 16V RC2
C37	Electrolytic	10 16V RC2
C38	Ceramic	0.0047 50V
C39	Electrolytic	0.47 50V
C40	Barrier Layer	0.1 16V
C41	Electrolytic	10 16V
C42	Electrolytic	4.7 25V
C43	Ceramic	0.5P 50V
C44	Ceramic	5P 50V
C45	Ceramic	0.5P 50V

[MAIN UNIT]

REF. NO.	DESCRIPTION	PART NO.
C46	Ceramic	5P 50V
C47	Ceramic	3P 50V
C48	Ceramic	0.001 50V
C49	Ceramic	10P 50V
C51	Monolithic	15P GRM40
C52	Ceramic	0.001 50V
C53	Monolithic	6P GRM40
C54	Trimmer	CV38B0601 6P
C55	Monolithic	2P GRM40
C57	Ceramic	0.001 50V
C58	Ceramic	5P 50V
C59	Barrier Layer	0.1 16V
C60	Electrolytic	10 16V RC2
C61	Barrier Layer	0.1 16V
C62	Barrier Layer	0.1 16V
C63	Electrolytic	0.47 50V RC2
C64	Ceramic	0.0047 50V
C65	Electrolytic	0.47 50V
C66	Mylar	0.0027 50V
C67	Electrolytic	0.47 50V RC2
C68	Mylar	0.1 50V
C69	Electrolytic	47 16V
C70	Electrolytic	220 10V
C71	Electrolytic	47 16V
C72	Electrolytic	470 16V
C73	Electrolytic	470 16V
C74	Barrier Layer	0.1 16V
C75	Ceramic	0.0047 50V
C76	Electrolytic	470 16V
C77	Electrolytic	47 10V
C78	Electrolytic	10 16V RC2
C79	Electrolytic	47 10V
C80	Monolithic	0.75P GRM40
C83	Monolithic	2P GRM40
C85	Trimmer	CV38D2001 20P
C87	Monolithic	10P GRM40
C88	Ceramic	0.35P 50V
C89	Trimmer	CV38B0601 6P
C90	Ceramic	0.001 50V
C91	Ceramic	0.001 50V
C92	Ceramic	0.001 50V
C93	Ceramic	0.001 50V
C94	Monolithic	3P GRM40
C95	Monolithic	3P GRM40
C97	Monolithic	5P GRM40
C98	Electrolytic	10 16V RC2
C99	Ceramic	0.001 50V
C100	Monolithic	0.5P GRM40
C101	Monolithic	2P GRM40
RL1	Relay	OMR-109F
RL2	Relay	RZ-12
RL3	Relay	G5Y-154P 9VDC
RL4	Relay	G5Y-154P 9VDC
J1	Connector	TL-25P-11-V1
J2	Connector	TL-25P-10-V1
J3	RT Pin	PT-01T-1.3B
J4	Connector	TL-25P-04-V1
J5	Connector	TL-25P-03-V1
J6	Connector	TL-25P-04-V1
J7	Connector	TL-25P-08-V1

[MAIN UNIT]

REF. NO.	DESCRIPTION	PART NO.
J8	Connector	TL-25P-04-V1
J9	RT Pin	RT-01T-1.0B
J10	Connector	TL-25P-04-V1
J11	Connector	TMP-J01X-V1
J13	Connector	TL-25P-03-V1
J14	Connector	TMP-J01X-V1
P1	Connector	TL-25H-02-B1
EP1	P.C. Board	B-992D (43013)
W1	Wire	51/09/430/W13A/C01A
W2		08 A A
W5	Jumper	IPS-1041-4
W6	Jumper	IPS-1041-4
W7	Jumper	IPS-1041-2
W8	Jumper	IPS-1041-2
W9	Jumper	IPS-1041-2
W10	Jumper	IPS-1041-4
W11	Jumper	IPS-1041-4
W12	Jumper	IPS-1041-4
W13	Jumper	IPS-1041-4
W14	Jumper	IPS-1041-4
W15	Jumper	IPS-1041-4
W16	Jumper	IPS-1041-2
W17	Jumper	IPS-1041-4
W18	Jumper	IPS-1041-4
W19	Jumper	IPS-1041-4
W20	Jumper	IPS-1041-2
W21	Jumper	IPS-1041-4
W22	Jumper	IPS-1041-4
W23	Jumper	IPS-1041-4
W24	Jumper	IPS-1041-4
W25	Jumper	IPS-1041-4
W26	Jumper	IPS-1041-4
W27	Jumper	IPS-1041-2
W29	Jumper	IPS-1041-2
W30	Jumper	IPS-1041-2
W31	Jumper	IPS-1041-4
W32	Jumper	IPS-1041-4
W33	Jumper	IPS-1041-4
W34	Jumper	IPS-1041-4
W35	Jumper	IPS-1041-4
W36	Jumper	IPS-1041-4
W37	Jumper	IPS-1041-2
W38	Jumper	IPS-1041-4
W39	Jumper	IPS-1041-4
W40	Jumper	IPS-1041-4
W41	Jumper	IPS-1041-4
W42	Jumper	IPS-1041-4
W43	Jumper	IPS-1041-4
W44	Jumper	IPS-1041-2
W45	Jumper	IPS-1041-2
W46	Jumper	IPS-1041-4
W47	Jumper	IPS-1041-2
W48	Jumper	IPS-1041-4
W49	Jumper	IPS-1041-4
W50	Jumper	IPS-1041-4
W51	Jumper	IPS-1041-4
W54	Jumper	IPS-1041-4

[MAIN UNIT]

REF. NO.	DESCRIPTION	PART NO.
W59	Wire	23/01/070/C21/C21
W60	Wire	23/01/090/C21/C21
W61	Wire	62/99/050/W99/W99
W62		08 99 99

[HPF UNIT]

REF. NO.	DESCRIPTION	PART NO.	
Q1	Transistor	2SC2367	
L1	Coil	LA-233	
L2	Coil	LA-232	
R1	Chip	1k	MCR10
R2	Resistor	6.8k	R20
R4	Resistor	100	R20
C1	Ceramic	5P	50V
C2	Monolithic	18P	GRM40
C3	Monolithic	5P	GRM40
C4	Monolithic	6P	GRM40
C5	Monolithic	4P	GRM40
C6	Monolithic	2P	GRM40
C7	Monolithic	3P	GRM40
C8	Monolithic	8P	GRM40
C9	Monolithic	0.001	GRM40
C10	Monolithic	4P	GRM40
C11	Monolithic	3P	GRM40
C12	Monolithic	8P	GRM40
C13	Monolithic	2P	GRM40
C14	Monolithic	7P	GRM40
C15	Monolithic	2P	GRM40
C16	Monolithic	2P	GRM40
EP1	P.C. Board	B-1080B	
W1	Wire	72/98/030/X98/X98	

[DOUBLER UNIT]

REF. NO.	DESCRIPTION	PART NO.	
Q1	Transistor	2SC2367	
L1	Coil	LA-232	
L3	Coil	IPS-1041-4	
L4	Coil	IPS-1041-4	
R1	Resistor	1k	R20
R2	Resistor	6.8k	R20
R3	Resistor	100	ELR20
C1	Ceramic	3P	50V
C2	Ceramic	5P	50V
C3	Ceramic	1P	50V
C4	Trimmer	CV38A0301 3P	
C5	Trimmer	CV38A0301 3P	
C6	Trimmer	CV38A0301 3P	
C7	Ceramic	0.001	50V
C8	Monolithic	0.001	GRM40
C9	Ceramic	0.35P	50V
EP1	P.C. Board	B-1249	
W1	Wire	72/98/030/X98/X98	

[IF UNIT]

REF. NO.	DESCRIPTION	PART NO.
IC1	IC	BA401
IC2	IC	TA7303P
IC3	IC	μPC1037H
IC4	IC	μPC577H
IC5	IC	μPC577H
IC6	IC	NJM4558D
Q1	Transistor	2SA1048 GR
Q2	Transistor	2SC2668 O
Q3	FET	2SK30ATM Y
Q4	Transistor	2SC1571 G
Q5	FET	3SK74 M
Q6	FET	3SK74 M
Q7	FET	3SK74 M
Q8	FET	2SK30ATM GR
Q9	Transistor	2SC2458 GR
Q10	Transistor	2SC2458 GR
Q11	Transistor	2SA1348
Q12	Transistor	2SC945 P
Q13	Transistor	2SC1571 G
Q14	Transistor	2SB562 C
Q15	Transistor	2SB562 C
Q16	Transistor	2SC3399
Q17	Transistor	2SA1348
Q18	Transistor	2SC2458 GR
Q19	Transistor	2SC2458 GR
Q20	Transistor	2SC1571 G
Q21	Transistor	2SC1815 GR/Y
Q22	Transistor	2SC1815 GR/Y
Q23	Transistor	2SC1571 G
Q24	Transistor	2SC1571 G
Q25	FET	2SK30ATM Y
Q26	Transistor	2SC2458 GR
Q27	Transistor	2SC3399
Q28	Transistor	2SA1348
Q29	Transistor	2SA1048 GR
Q30	FET	2SK30ATM Y
Q31	Transistor	2SC3402
D1	Diode	1SS53
D2	Diode	1SS53
D3	Diode	1SS53
D6	Diode	1SS53
D7	Diode	1SS53
D8	Diode	1SS53
D9	Diode	1SS53
D10	Diode	1SS53
D11	Diode	1SS53
D12	Diode	1SS53
D13	Diode	1SS53
D14	Diode	1SS53
D15	Diode	1SS53
D16	Diode	1SS53
D17	Diode	1K60
D18	Diode	1K60
D19	Diode	1SS53
D20	Diode	1SS53
D21	Diode	1SS53
D22	Diode	1SS53
D23	Diode	1SS53
D24	Diode	1SS53
D25	Diode	1SS53

[IF UNIT]

REF. NO.	DESCRIPTION	PART NO.
D26	Diode	1SS53
D27	Diode	1SS53
D28	Diode	1K60
D29	Diode	1SS53
D30	Diode	1K60
D31	Diode	1SS53
D32	Diode	1K60
D33	Diode	1K60
D34	Diode	1SS53
D35	Diode	1SS53
D36	Diode	1SS53
D37	Diode	1K60
D38	Diode	1K60
D39	Diode	1K60
D40	Diode	1K60
D41	Diode	1SS53
D42	Varicap	1S2208 (B)
D43	Diode	1SS53
D44	Diode	1SS53
D45	Diode	1SS53
D46	Diode	1SS53
D47	Diode	1SS133
D48	Diode	1SS133
D49	Diode	1SS53
D50	Diode	1SS53
FI1	Ceramic	SFE10.7MMH-A
FI2	Ceramic	SFE10.7MJ-A
FI3	Monolithic	FL-75
FI4	Ceramic	CFW455E
FI5	Ceramic	CFW455HT
FI6	Ceramic	CFW455K1
X1	Discriminator	CDA10.7MG8-A
X2	Crystal	CR114
X3	Discriminator	CFY455S
L1	Coil	LS-214
L3	Coil	LAL03NA 120K
L4	Coil	LS-164
L5	Coil	LS-129
L6	Coil	LS-129
L7	Coil	LS-238
L8	Coil	LS-240
L9	Coil	LAL04NA 101K
L10	Coil	LS-66A
L11	Coil	LS-16
L12	Coil	FL5H 102J
L13	Coil	LAL03NA 121K
L14	Coil	LS-164
L15	Coil	LS-294
L16	Coil	FL5H 102J
R1	Resistor	2.2k R20
R2	Resistor	100k R20
R3	Thermistor	45D26NL-CM
R4	Resistor	22k R20
R5	Resistor	220k ELR20
R6	Resistor	330 R20
R7	Resistor	4.7k R20

[IF UNIT]

REF. NO.	DESCRIPTION	PART NO.
R8	Resistor	330 ELR20
R9	Resistor	100 R20
R10	Resistor	330 ELR20
R11	Resistor	330 ELR20
R12	Resistor	47 R20
R13	Resistor	3.9k ELR20
R14	Resistor	1k R25
R15	Resistor	820k ELR20
R16	Resistor	47k ELR20
R17	Resistor	47k ELR20
R19	Resistor	47k R20
R20	Resistor	330k ELR20
R21	Resistor	1k R20
R22	Resistor	3.3k ELR20
R23	Resistor	4.7k R20
R24	Resistor	15k ELR20
R25	Resistor	5.6k R20
R26	Resistor	1M ELR20
R27	Resistor	47k R20
R28	Trimmer	RHB0CS32UA 4.7K
R29	Resistor	4.7k ELR20
R30	Resistor	3.3k R20
R31	Resistor	3.3k ELR20
R32	Resistor	3.3k ELR20
R33	Resistor	2.2k R20
R34	Resistor	2.2k R20
R35	Resistor	10k ELR20
R36	Resistor	100k ELR20
R37	Resistor	100k R20
R38	Resistor	470 ELR20
R39	Resistor	220 R20
R40	Resistor	2.2k R20
R41	Resistor	1k R20
R42	Resistor	2.2k R20
R43	Resistor	100 R20
R44	Resistor	3.3k ELR20
R45	Resistor	3.3k ELR20
R46	Resistor	3.3k ELR20
R47	Resistor	3.3k ELR20
R48	Resistor	3.3k ELR20
R49	Resistor	3.3k ELR20
R50	Resistor	330 R20
R51	Resistor	470 ELR20
R52	Resistor	330 R20
R53	Resistor	15k ELR20
R54	Resistor	330 R20
R55	Resistor	47k ELR20
R56	Resistor	47k ELR20
R57	Resistor	47k ELR20
R58	Resistor	100 R20
R59	Resistor	100 R20
R60	Resistor	4.7k ELR20
R61	Resistor	3.3k R20
R62	Resistor	3.3k ELR20
R63	Resistor	3.3k ELR20
R64	Resistor	3.3k ELR20
R65	Resistor	100k ELR20
R66	Resistor	10k R20
R67	Resistor	150 ELR20
R68	Resistor	100 R20
R69	Resistor	4.7k R20
R70	Resistor	10k R20
R71	Resistor	470 ELR20
R72	Resistor	100 R25

[IF UNIT]

REF. NO.	DESCRIPTION	PART NO.
R73	Resistor	47k R20
R74	Resistor	47k ELR20
R75	Resistor	10k ELR20
R76	Resistor	100 ELR20
R77	Resistor	10k ELR20
R78	Resistor	100 R20
R79	Resistor	47k R20
R80	Trimmer	RHB0CS211LA 470
R81	Resistor	330 ELR20
R82	Resistor	10k ELR20
R83	Resistor	47k ELR20
R84	Resistor	100k ELR20
R85	Resistor	1k R20
R86	Resistor	2.2k ELR20
R87	Resistor	100 ELR20
R88	Resistor	1k ELR20
R89	Resistor	100 R25
R90	Resistor	220k ELR20
R91	Resistor	1k R20
R92	Trimmer	RHB0C151XA 100K
R93	Resistor	4.7k ELR20
R94	Resistor	10k R20
R95	Resistor	10k ELR20
R96	Resistor	10k ELR20
R97	Resistor	10k R20
R98	Resistor	150k ELR20
R99	Resistor	82k ELR20
R100	Resistor	39k ELR20
R101	Resistor	33k ELR20
R102	Resistor	22k ELR20
R103	Resistor	22k R20
R104	Resistor	15k R20
R105	Resistor	4.7k ELR20
R106	Resistor	4.7k ELR20
R107	Resistor	4.7k ELR20
R108	Resistor	10k R20
R109	Resistor	10k ELR20
R110	Resistor	4.7k R20
R111	Resistor	4.7k ELR20
R112	Resistor	100 R20
R113	Resistor	1.8M R20
R114	Resistor	1k ELR20
R115	Resistor	10k ELR20
R116	Resistor	10k R20
R117	Resistor	15k R20
R118	Resistor	2.2k ELR20
R119	Resistor	270k ELR20
R120	Resistor	47k ELR20
R121	Resistor	470k ELR20
R122	Resistor	1k R20
R123	Resistor	4.7k ELR20
R124	Resistor	15k R20
R125	Resistor	4.7k ELR20
R126	Resistor	10k ELR20
R127	Trimmer	RH0651CS4J25A 47K
R128	Resistor	12k ELR20
R129	Resistor	6.8k ELR20
R130	Resistor	82k R20
R131	Resistor	220 R20
R132	Resistor	220 R20
R133	Resistor	6.8k R20
R134	Resistor	10k ELR20
R135	Resistor	47k ELR20
R136	Resistor	4.7k ELR20

[IF UNIT]

REF. NO.	DESCRIPTION	PART NO.
R137	Resistor	1k ELR20
R138	Resistor	100 ELR20
R139	Resistor	15k ELR20
R140	Resistor	4.7k ELR20
R141	Resistor	1k ELR20
R142	Resistor	1.8M R20
R143	Resistor	1.8M ELR20
R144	Resistor	100k R20
R145	Resistor	2.2k ELR20
R146	Resistor	47k ELR20
R147	Resistor	220 R20
R148	Resistor	68k ELR20
R149	Resistor	220 ELR20
R150	Resistor	100 ELR20
R151	Resistor	15k ELR20
R152	Resistor	100 R20
R153	Resistor	1.2k R20
R154	Resistor	1k R20
R155	Resistor	470 R20
R156	Resistor	100k ELR20
R157	Resistor	10k ELR20
R158	Trimmer	RH0651C15J1UA 100K
R159	Resistor	2.2k R20
R160	Resistor	2.2k ELR20
R161	Resistor	10k ELR20
R162	Thermistor	23D29
R163	Thermistor	23D29
R164	Resistor	10k ELR20
R165	Thermistor	33D28
R166	Resistor	120k R20
R167	Resistor	10k ELR20
R168	Resistor	8.2k CRB25FX
R169	Resistor	4.7k CRB25FX
R170	Resistor	100 ELR20
R171	Trimmer	RHB0CN202A 330
R172	Resistor	4.7k ELR20
R173	Resistor	100k ELR20
R174	Resistor	2.2k ELR20
R175	Thermistor	33D28
R176	Resistor	1k ELR20
C1	Ceramic	0.0047 50V
C2	Ceramic	0.0047 50V
C3	Ceramic	18P 50V CH
C6	Electrolytic	10 16V RC2
C7	Ceramic	0.0047 50V
C8	Ceramic	0.0047 50V
C9	Ceramic	0.0047 50V
C10	Ceramic	0.0047 50V
C11	Ceramic	0.0047 50V
C12	Ceramic	0.0047 50V
C13	Electrolytic	1 50V RC2
C14	Ceramic	4P 50V CH
C15	Mylar	0.01 50V
C16	Mylar	0.01 50V
C17	Barrier Layer	0.1 16V
C19	Electrolytic	0.47 50V BP
C20	Electrolytic	10 16V RC2
C21	Electrolytic	10 16V RC2
C22	Electrolytic	0.47 50V RC2
C23	Mylar	0.033 50V
C25	Ceramic	0.001 50V
C28	Barrier Layer	0.1 16V

[IF UNIT]

REF. NO.	DESCRIPTION	PART NO.
C30	Electrolytic	2.2 50V RC2
C31	Ceramic	0.0047 50V
C32	Ceramic	4P 50V
C33	Mylar	0.022 50V
C34	Barrier Layer	0.1 16V
C35	Ceramic	0.0047 50V
C36	Electrolytic	10 16V
C37	Ceramic	0.0047 50V
C38	Ceramic	0.0047 50V
C39	Ceramic	0.0047 50V
C40	Barrier Layer	0.1 16V
C41	Barrier Layer	0.1 16V
C42	Barrier Layer	0.1 16V
C43	Barrier Layer	0.1 16V
C44	Barrier Layer	0.1 16V
C45	Barrier Layer	0.1 16V
C46	Barrier Layer	0.1 16V
C47	Barrier Layer	0.1 16V
C48	Barrier Layer	0.1 16V
C49	Barrier Layer	0.1 16V
C50	Mylar	0.001 50V
C51	Barrier Layer	0.047 25V
C52	Barrier Layer	0.047 25V
C53	Barrier Layer	0.047 25V
C54	Barrier Layer	0.047 25V
C55	Barrier Layer	0.047 25V
C56	Mylar	0.01 50V
C57	Mylar	0.01 50V
C58	Ceramic	2P 50V
C59	Barrier Layer	0.047 25V
C60	Barrier Layer	0.047 25V
C61	Barrier Layer	0.1 16V
C62	Electrolytic	47 16V
C63	Ceramic	0.0047 50V
C64	Barrier Layer	0.047 25V
C65	Electrolytic	0.47 50V
C66	Ceramic	68P 50V
C67	Ceramic	22P 50V
C69	Electrolytic	10 16V
C70	Dip Mica	22P 50V
C71	Trimmer	ECR-GA010D30 10P
C72	Dip Mica	100P 50V
C73	Dip Mica	200P 50V
C74	Ceramic	0.0047 50V
C75	Ceramic	47P 50V
C76	Ceramic	100P 50V
C77	Barrier Layer	0.1 16V
C78	Barrier Layer	0.1 16V
C79	Barrier Layer	0.1 16V
C80	Barrier Layer	0.1 16V
C81	Mylar	0.001 50V
C82	Electrolytic	10 16V RC2
C83	Barrier Layer	0.1 16V
C84	Mylar	0.01 50V
C85	Mylar	0.01 50V
C86	Barrier Layer	0.1 16V
C87	Ceramic	0.001 50V
C88	Electrolytic	10 16V RC2
C89	Electrolytic	2.2 50V RC2
C90	Electrolytic	47 10V
C91	Barrier Layer	0.1 16V
C92	Ceramic	100P 50V
C93	Ceramic	68P 50V
C94	Barrier Layer	0.0047 25V

[IF UNIT]

REF. NO.	DESCRIPTION	PART NO.
C95	Ceramic	220P 50V
C96	Ceramic	220P 50V
C97	Ceramic	100P 50V
C98	Ceramic	68P 50V
C99	Barrier Layer	0.047 25V
C100	Electrolytic	10 16V
C101	Mylar	0.033 50V
C102	Electrolytic	10 16V
C103	Ceramic	120P 50V
C104	Ceramic	120P 50V
C105	Ceramic	0.0047 50V
C106	Mylar	0.0047 50V
C107	Mylar	0.0033 50V
C108	Barrier Layer	0.1 16V
C109	Barrier Layer	0.047 25V
C110	Electrolytic	10 16V RC2
C111	Barrier Layer	0.1 16V
C112	Electrolytic	10 16V RC2
C113	Barrier Layer	0.1 16V
C114	Mylar	0.001 50V
C115	Mylar	0.001 50V
C116	Ceramic	220P 50V
C117	Ceramic	220P 50V
C118	Mylar	0.0047 50V
C119	Monolithic	RPE131 CH 102 J 50
C120	Styrene	510P 50V
C121	Monolithic	RPE131 CH 102 J 50
C122	Mylar	0.033 50V
C123	Barrier Layer	0.1 16V
C124	Ceramic	39P 50V CH
C125	Ceramic	0.01 50V
C126	Barrier Layer	0.1 16V
C128	Ceramic	0.0047 50V
C129	Electrolytic	10 16V RC2
C130	Ceramic	200P 50V UJ
C131	Mylar	0.001 50V
C132	Electrolytic	10 16V RC2
C133	Ceramic	18P 50V CH
C134	Trimmer	ECR-GA010D3010P
C135	Electrolytic	1 50V RC2
C137	Mylar	50 F2D 332 J
C138	Mylar	50 F2D 103 J
C139	Mylar	50 F2D 332 J
C143	Electrolytic	0.47 50V RC2
J1	Connector	TL-25P-03-V1
J2	Connector	TL-25P-06-V1
J3	Connector	TLB-P11H-B1
J4	Connector	TL-25P-03-V1
J5	Connector	TL-25P-04-V1
J6	Connector	5045-03A
J7	RT Pin	RT-01T-1.0B
J8	Connector	IMSA-9201B-2-4T
J9	RT Pin	RT-01T-1.0B
P1	Connector	IMSA-9201B-HT
P2	Connector	TL-25H-11-B1
EP1	P.C. Board	B-991E

[IF UNIT]

REF. NO.	DESCRIPTION	PART NO.
W1	Wire	51/99/100/W13A/W13A
W2		08 A A
W4	Jumper	IPS-1041-4
W5	Jumper	IPS-1041-2
W6	Jumper	IPS-1041-4
W7	Jumper	JPW-02A
W8	Jumper	IPS-1041-2
W9	Jumper	IPS-1041-4
W10	Jumper	IPS-1041-2
W11	Jumper	IPS-1041-4
W12	Jumper	IPS-1041-4
W13	Jumper	IPS-1041-4
W14	Jumper	IPS-1041-2
W15	Jumper	IPS-1041-4
W17	Jumper	IPS-1041-4
W18	Jumper	IPS-1041-2
W19	Jumper	IPS-1041-2
W20	Jumper	IPS-1041-4
W21	Jumper	IPS-1041-4
W22	Jumper	IPS-1041-4
W23	Jumper	IPS-1041-4
W24	Jumper	IPS-1041-4
W25	Jumper	IPS-1041-2
W26	Jumper	IPS-1041-4
W27	Jumper	IPS-1041-4
W28	Jumper	IPS-1041-4
W29	Jumper	IPS-1041-4
W30	Jumper	IPS-1041-4
W31	Jumper	IPS-1041-4
W33	Jumper	IPS-1041-4
W34	Jumper	IPS-1041-4
W35	Jumper	IPS-1041-2
W36	Jumper	IPS-1041-4
W37	Jumper	IPS-1041-4
W38	Jumper	IPS-1041-4
W39	Wire	23/02/290/C01/C22
W40	Wire	23/01/290/C01/C22
W41	Wire	23/00/290/C01/C22
W42	Wire	51/05/290/C01A/C22A
W43		08 A A
W44	Wire	23/05/290/C01/C22
W45	Wire	23/06/290/C01/C22
W46	Wire	23/07/290/C01/C22
W47	Wire	23/08/290/C01/C22
W48	Wire	23/03/290/C01/C22
W49	Wire	23/09/290/C01/C22
W50	Wire	23/05/140/C21/C21
W51	Wire	23/06/140/C21/C21
W52	Wire	23/07/080/C21/C21
W53	Jumper	IPS-1041-2
W54	Jumper	IPS-1041-4
W55	Jumper	IPS-1041-2
W56	Jumper	IPS-1041-2
W57	Jumper	IPS-1041-4
W58	Jumper	IPS-1041-2
W59	Jumper	IPS-1041-4

[RF UNIT]

REF. NO.	DESCRIPTION	PART NO.
IC1	IC	NJM4558D
IC2	IC	NJM4558D
IC3	IC	NJM4558D
IC4	IC	NJM4558D
IC5	IC	BA618
IC6	DBM	DM-88XA
IC7	DBM	DM-251E
Q1	FET	3SK121 Y
Q2	FET	3SK121 Y
Q3	FET	3SK121 Y
Q4	FET	3SK121 Y
Q5	Transistor	2SC3355
Q6	Transistor	2SC3355
Q7	Transistor	2SC3355
Q8	Transistor	2SC3355
Q9	FET	2SK241 GR
Q10	Transistor	2SC3399
Q11	Transistor	2SC3399
Q12	Transistor	2SC3399
Q13	Transistor	2SC3399
Q14	Transistor	2SC3399
Q15	Transistor	2SB562 C
Q16	Transistor	2SC3355
Q17	Transistor	2SC3355
Q18	FET	3SK101 GR/BL
Q19	Transistor	2SC2458 GR
Q20	FET	2SK30ATM Y
Q21	Transistor	2SC945 P
D1	Diode	1SS216
D2	Diode	1SS216
D3	Diode	MI204
D4	Diode	MI204
D5	Diode	1SS216
D6	Varicap	SVC321 A
D7	Varicap	SVC321 A
D8	Varicap	SVC321 A
D9	Varicap	SVC321 A
D10	Varicap	SVC321 A
D11	Diode	1SS216
D12	Diode	MI204
D13	Varicap	1SV88
D14	Varicap	1SV88
D15	Varicap	1SV88
D16	Zener	RD3.0E B2
D17	Varicap	1SV88
D18	Diode	MI204
D19	Diode	1SS216
D21	Varicap	1SV50E (1)
D22	Varicap	1SV50E (1)
D23	Varicap	1SV50E (1)
D24	Varicap	1SV50E (1)
D25	Diode	1SS216
D26	Varicap	1S2208 (B)
D27	Varicap	1S2208 (B)
D28	Varicap	1S2208 (B)
D29	Varicap	1S2208 (B)
D30	Varicap	1S2208 (B)
D31	Varicap	1S2208 (B)
D32	Varicap	1S2208 (B)
D33	Varicap	1S2208 (B)

[RF UNIT]

REF. NO.	DESCRIPTION	PART NO.
D34	Varicap	1S2208 (B)
D35	Diode	1SS216
D38	Diode	1SS216
D39	Diode	MI204
D41	Diode	1SS216
D43	Diode	1SS53
D44	Zener	RD12E B2
D45	Zener	RD12E B2
D46	Diode	1SS53
D47	Zener	RD12E B2
D48	Diode	1SS53
D49	Diode	1SS53
D50	Zener	RD12E B2
D51	Diode	1SS53
D52	Zener	RD8.2E B1
D53	Diode	1SS133
FI1	Filter	EZF-B778BT13
L1	Coil	LAL03NA 100K
L2	Coil	LAL03NA 100K
L3	Coil	LAL03NA R33M
L4	Coil	LAL03NA 100K
L5	Coil	LAL02KR 100K
L6	Coil	LAL02KR 100K
L7	Coil	LAL02KR 100K
L8	Coil	LAL03NA 100K
L9	Coil	LAL03NA 100K
L10	Coil	LAL03NA 101K
L11	Coil	LAL03NA R56M
L12	Coil	LAL03NA R47M
L13	Coil	LA-247
L14	Coil	LA-247
L15	Coil	LAL03NA 100K
L16	Coil	LA-247
L17	Coil	LA-247
L18	Coil	LAL03NA R47M
L19	Coil	LAL03NA 101K
L20	Coil	LAL03NA 100K
L21	Coil	LAL02KR 100K
L22	Coil	LAL03NA R33M
L23	Coil	LA-237
L24	Coil	LA-234
L25	Coil	LA-234
L26	Coil	LAL03NA 1R0M
L27	Coil	LA-234
L28	Coil	LA-234
L29	Coil	LA-248
L30	Coil	LAL03NA 100K
L31	Coil	LAL02KR 100K
L32	Coil	LA-242
L33	Coil	LA-232
L34	Coil	LA-158
L35	Coil	LA-247
L36	Coil	LA-158
L37	Coil	LA-233
L38	Coil	LAL03NA 100K
L39	Coil	LA-234
L40	Coil	LA-235
L42	Coil	LA-233
L43	Coil	LA-234
L44	Coil	LAL02KR 4R7K

[RF UNIT]

REF. NO.	DESCRIPTION	PART NO.	
L45	Coil	LAL02KR 4R7K	
L46	Coil	LB-175	
L47	Coil	LB-175	
L48	Coil	LAL02KR 4R7K	
L49	Coil	LAL02KR 4R7K	
L50	Coil	LAL02KR 4R7K	
L51	Coil	252HA-1965F	
L52	Coil	LAL02KR 4R7K	
L53	Coil	LAL03NA 100K	
L54	Coil	LAL02KR 100K	
L55	Coil	LA-234	
L56	Coil	LR-85A	
L57	Coil	LS-247	
L58	Coil	LS-247	
L59	Coil	LAL04NA 101K	
L60	Coil	LAL03NA R33M	
L61	Coil	LAL02TB 100K	
L62	Coil	LAL03NA 100K	
L63	Coil	LAL03NA 100K	
L64	Coil	LAL03NA 100K	
L65	Coil	LAL03NA 100K	
L66	Coil	LAL02KR 100K	
L67	Coil	LB-187	
L68	Coil	LB-187	
L69	Coil	LA-234	
L70	Coil	LA-246	
L71	Coil	LA-232	
L72	Coil	LAL03NA 100K	
L73	Coil	LA-233	
L74	Coil	LA-233	
L77	Coil	LAL03NA 100K	
L78	Coil	LA-232	
L79	Coil	LA-232	
L80	Coil	LA-232	
L81	Coil	LAL03NA 3R3K	
R1	Resistor	820	ELR20
R2	Resistor	100	ELR20
R3	Resistor	47	R20
R4	Resistor	100	ELR20
R5	Resistor	68	ELR20
R6	Resistor	68	ELR20
R7	Resistor	180	ELR20
R8	Resistor	180	ELR20
R9	Resistor	100	R20
R10	Resistor	820	ELR20
R11	Resistor	390	ELR20
R12	Resistor	100	R20
R13	Resistor	47k	R20
R14	Resistor	47k	R20
R15	Resistor	1k	R20
R16	Resistor	120	ELR20
R17	Resistor	47k	R20
R18	Resistor	470k	ELR20
R19	Resistor	390	ELR20
R20	Resistor	100	R20
R21	Resistor	47k	R20
R22	Resistor	47k	R20
R23	Resistor	1k	R20
R24	Resistor	120	ELR20
R25	Resistor	47k	R20
R26	Resistor	470k	ELR20
R27	Resistor	100	R20

[RF UNIT]

REF. NO.	DESCRIPTION	PART NO.	
R29	Resistor	47k	R20
R31	Resistor	120	ELR20
R32	Resistor	47k	R20
R33	Resistor	470k	ELR20
R34	Resistor	47k	R20
R35	Resistor	47k	R20
R36	Resistor	100k	ELR20
R37	Resistor	470k	R20
R38	Resistor	120	R20
R39	Resistor	47k	R20
R40	Chip	6.8k	MCR10
R41	Chip	100	MCR10
R42	Chip	100	MCR10
R43	Chip	6.8k	MCR10
R44	Chip	100	MCR10
R45	Chip	1k	MCR10
R46	Resistor	6.8k	ELR20
R47	Resistor	150	ELR20
R48	Resistor	100	ELR20
R49	Chip	47k	MCR10
R50	Chip	47k	MCR10
R51	Resistor	100k	R20
R52	Chip	270	MCR10
R54	Chip	15	MCR10
R55	Resistor	6.8k	ELR20
R56	Resistor	150	ELR20
R57	Resistor	100	ELR20
R58	Chip	1k	MCR10
R60	Resistor	100	R20
R62	Chip	2.2k	MCR10
R64	Resistor	100	R20
R66	Trimmer	RHB0C151XA 100K	
R67	Resistor	100k	R20
R68	Trimmer	RHB0CN40YA 33K	
R69	Resistor	47k	ELR20
R70	Resistor	10k	ELR20
R71	Trimmer	RHB0C1431A 10K	
R72	Resistor	4.7k	ELR20
R73	Trimmer	RHB0CS511A 470K	
R74	Resistor	220k	ELR20
R75	Resistor	10k	R20
R76	Resistor	15k	ELR20
R77	Trimmer	RHB0CS511A 470K	
R78	Resistor	120k	ELR20
R79	Trimmer	RHB0CS511A 470K	
R80	Resistor	100k	ELR20
R81	Resistor	47k	ELR20
R82	Resistor	47k	ELR20
R83	Resistor	10k	ELR20
R84	Resistor	27k	ELR20
R85	Resistor	470k	ELR20
R86	Resistor	27k	ELR20
R87	Resistor	56k	ELR20
R88	Resistor	18k	ELR20
R89	Trimmer	RHB0CJ401A 22K	
R90	Trimmer	RHB0CN40YA 33K	
R91	Resistor	2.2k	ELR20
R92	Resistor	27k	ELR20
R93	Resistor	56k	ELR20
R95	Resistor	220k	ELR20
R96	Resistor	47k	ELR20
R97	Resistor	180k	ELR20
R98	Resistor	100k	ELR20
R99	Resistor	100k	ELR20

[RF UNIT]

REF. NO.	DESCRIPTION	PART NO.	
R100	Resistor	82k	ELR20
R101	Resistor	33k	ELR20
R102	Resistor	68k	ELR20
R103	Resistor	10k	ELR20
R104	Trimmer	RH0651C15J1UA 100K	
R105	Trimmer	RHB0C1431A 10K	
R106	Resistor	10k	ELR20
R107	Array	RMX-6	10k
R108	Resistor	47k	ELR20
R109	Resistor	47k	ELR20
R110	Resistor	10k	ELR20
R111	Resistor	100k	ELR20
R112	Resistor	10k	ELR20
R113	Resistor	10k	ELR20
R114	Resistor	10	ELR20
R115	Resistor	10	R25
R116	Chip	270	MCR10
R118	Chip	15	MCR10
R119	Chip	100	MCR10
R120	Chip	6.8k	MCR10
R121	Chip	100	MCR10
R122	Chip	100	MCR10
R123	Chip	6.8k	MCR10
R124	Resistor	470k	ELR20
R125	Resistor	100k	R20
R126	Resistor	470	ELR20
R127	Resistor	470	ELR20
R128	Resistor	1k	ELR20
R129	Resistor	330k	R20
R130	Resistor	2.2k	ELR20
R131	Resistor	220k	ELR20
R132	Resistor	150	ELR20
R133	Resistor	220	R20
R135	Resistor	22	R20
R136	Resistor	22	ELR20
R137	Resistor	10k	R20
R138	Resistor	10k	R25
R139	Resistor	10k	R25
R140	Resistor	10k	R25
R141	Resistor	100	R20
R142	Resistor	100	ELR20
R143	Resistor	100	ELR20
R144	Resistor	100	R20
R145	Resistor	1M	ELR20
R146	Resistor	220	ELR20
R147	Resistor	15k	ELR20
R148	Resistor	3.3k	ELR20
R149	Resistor	1k	ELR20
R150	Resistor	100	CRB25FX
R152	Resistor	1k	ELR20
R153	Resistor	100	CRB25FX
R154	Resistor	470k	ELR20
R156	Resistor	22k	ELR20
R157	Resistor	330k	ELR20
R158	Chip	1k	MCR10
R159	Chip	1k	MCR10
R160	Chip	1k	MCR10
R161	Chip	10k	MCR10
R162	Chip	10k	MCR10
C1	Monolithic	3P	GRM40
C2	Monolithic	2P	GRM40
C3	Monolithic	2P	GRM40

[RF UNIT]

REF. NO.	DESCRIPTION	PART NO.	
C4	Monolithic	100P	GRM40
C5	Monolithic	0.001	GRM40
C6	Monolithic	100P	GRM40
C7	Ceramic	0.001	50V
C8	Ceramic	2P	50V
C9	Ceramic	0.001	50V
C10	Ceramic	0.001	50V
C11	Ceramic	0.001	50V
C12	Ceramic	0.001	50V
C13	Ceramic	0.001	50V
C14	Ceramic	0.001	50V
C15	Ceramic	0.001	50V
C16	Ceramic	0.001	50V
C17	Ceramic	0.001	50V
C18	Ceramic	0.0047	50V
C19	Ceramic	0.001	50V
C20	Ceramic	8P	50V
C21	Ceramic	0.001	50V
C22	Ceramic	0.001	50V
C23	Ceramic	0.001	50V
C24	Ceramic	33P	50V
C25	Ceramic	0.001	50V
C26	Ceramic	0.001	50V
C27	Ceramic	0.001	50V
C28	Ceramic	0.001	50V
C29	Ceramic	0.001	50V
C30	Ceramic	3P	50V
C31	Ceramic	0.001	50V
C32	Ceramic	0.001	50V
C33	Ceramic	0.001	50V
C34	Ceramic	100P	50V
C35	Ceramic	10P	50V
C36	Ceramic	0.001	50V
C37	Ceramic	0.001	50V
C38	Ceramic	0.001	50V
C39	Ceramic	0.001	50V
C40	Ceramic	2P	50V
C41	Ceramic	0.001	50V
C42	Ceramic	0.001	50V
C43	Ceramic	0.001	50V
C44	Ceramic	12P	50V
C45	Ceramic	470P	50V
C46	Ceramic	0.001	50V
C47	Monolithic	0.001	GRM40
C48	Monolithic	470P	GRM40
C49	Ceramic	0.001	50V
C50	Monolithic	2P	GRM40
C51	Ceramic	18P	50V
C52	Monolithic	12P	GRM40
C53	Monolithic	4P	GRM40
C54	Monolithic	3P	GRM40
C55	Monolithic	5P	GRM40
C56	Monolithic	0.001	GRM40
C57	Monolithic	3P	GRM40
C58	Monolithic	120P	GRM40
C59	Monolithic	0.5P	GRM40
C60	Ceramic	0.001	50V
C61	Ceramic	12P	50V
C62	Monolithic	2P	GRM40
C63	Monolithic	0.001	GRM40
C64	Monolithic	0.001	GRM40
C65	Ceramic	0.001	50V
C66	Ceramic	47P	50V
C67	Monolithic	47P	GRM40

[RF UNIT]

REF. NO.	DESCRIPTION	PART NO.	
C68	Ceramic	0.001	50V
C69	Ceramic	120P	50V
C70	Monolithic	0.001	GRM40
C71	Monolithic	47P	GRM40
C72	Ceramic	22P	50V
C73	Ceramic	0.001	50V
C74	Ceramic	0.001	50V
C75	Ceramic	120P	50V
C76	Monolithic	0.001	GRM40
C77	Monolithic	1P	GRM40
C78	Monolithic	3P	GRM40
C79	Monolithic	2P	GRM40 CK
C81	Monolithic	5P	GRM40
C82	Monolithic	1P	GRM40
C83	Monolithic	0.001	GRM40
C84	Monolithic	0.001	GRM40
C85	Monolithic	4P	GRM40
C86	Monolithic	10P	GRM40
C87	Ceramic	47P	50V
C88	Monolithic	12P	GRM40 CH
C89	Monolithic	GRM40 SL 1R5C 50PT	
C90	Monolithic	10P	GRM40
C91	Monolithic	0.001	GRM40
C92	Monolithic	100P	GRM40
C93	Array	B8ZC0111-32N 0.0082×7	
C94	Array	B8ZC0111-32N 0.0082×7	
C95	Ceramic	0.001	50V
C96	Mylar	0.022	50V
C97	Electrolytic	4.7	25V RC2
C98	Monolithic	120P	GRM40
C99	Monolithic	150P	GRM40
C100	Monolithic	3P	GRM40
C101	Monolithic	0.001	GRM40
C102	Monolithic	0.001	GRM40
C103	Monolithic	8P	GRM40
C104	Monolithic	1P	GRM40
C105	Monolithic	5P	GRM40
C106	Mylar	0.001	50V
C107	Barrier Layer	UAT05X 103K-L05AC	
C108	Ceramic	0.0047	50V
C109	Ceramic	0.0047	50V
C110	Ceramic	0.0047	50V
C111	Monolithic	0.001	GRM40
C112	Ceramic	0.0047	50V
C113	Ceramic	0.001	50V
C114	Barrier Layer	RAU05SA 221J-L05AC	
C115	Ceramic	68P	50V
C116	Barrier Layer	RAU05SA 221J-L05AC	
C117	Barrier Layer	RAU05SA 181K-L05AC	
C118	Barrier Layer	RAU05SA 181K-L05AC	
C119	Barrier Layer	RAU05SA 181K-L05AC	
C120	Barrier Layer	RAU05SA 181K-L05AC	
C121	Electrolytic	10	16V RC2
C122	Ceramic	0.001	50V
C123	Feed Through	TF240-602 SS332Z 50V	
C124	Feed Through	TF240-602 SS332Z 50V	
C125	Feed Through	TF240-602 SS332Z 50V	
C126	Feed Through	TF240-602 SS332Z 50V	
C127	Feed Through	TF240-602 SS332Z 50V	
C128	Feed Through	TF240-602 SS332Z 50V	
C129	Feed Through	TF240-602 SS332Z 50V	
C130	Feed Through	TF240-602 SS332Z 50V	

[RF UNIT]

REF. NO.	DESCRIPTION	PART NO.
C131	Monolithic	120P GRM40
C132	Monolithic	120P GRM40
C133	Ceramic	15P 50V
C134	Monolithic	3P GRM40
C135	Monolithic	120P GRM40
C136	Monolithic	120P GRM40
C137	Monolithic	3P GRM40
C138	Monolithic	120P GRM40
C139	Monolithic	6P GRM40
C140	Monolithic	4P GRM40
C141	Monolithic	5P GRM40
C142	Monolithic	15P GRM40
C143	Monolithic	15P GRM40
C144	Monolithic	4P GRM40
C145	Monolithic	1P GRM40
C146	Monolithic	4P GRM40
C147	Monolithic	10P GRM40
C148	Monolithic	6P GRM40
C149	Monolithic	5P GRM40
C150	Ceramic	47P 50V
C151	Monolithic	6P GRM40
C152	Feed Through	TF240-602 SS332Z 50V
C153	Feed Through	TF240-602 SS332Z 50V
C154	Feed Through	TF240-602 SS332Z 50V
C155	Monolithic	5P GRM40 CH
C156	Monolithic	4P GRM40 CH
RL1	Relay	G5Y-154P 9VDC
RL2	Relay	G5Y-154P 9VDC
J4	Connector	TLB-P03H-B1
J5	Connector	TMP-J01X-V1
J6	Connector	TL-25P-06-V1
J7	Connector	TL-25P-03-V1
J8	Connector	TL-25P-04-V1
J9	Connector	TLB-P03H-B1
P1	Connector	TL-25H-03-B1
P2	Connector	TMP-P01X-A1
P3	Connector	TMP-P01X-A1
P4	Connector	TMP-P01X-A1
EP1	P.C. Board	B-990F
EP2	P.C. Board	B-1180B
EP3	P.C. Board	B-1181C
EP4	P.C. Board	B-1182B
EP5	P.C. Board	B-1201A
EP6	P.C. Board	B-1202B
W1	Wire	65/00/070/C01A/C22A
W2		00 A A
W3	Wire	23/07/070/C01/C22
W6	Jumper	JPW-02A
W7	Jumper	JPW-02A
W8	Jumper	JPW-02A
W9	Jumper	JPW-02A
W10	Jumper	JPW-02A
W11	Jumper	JPW-02A
W12	Jumper	JPW-02A

[RF UNIT]

REF. NO.	DESCRIPTION	PART NO.
W13	Jumper	JPW-02A
W14	Jumper	JPW-02A
W15	Jumper	JPW-02A
W16	Jumper	JPW-02A
W17	Jumper	JPW-02A
W18	Jumper	JPW-02A
W19	Jumper	JPW-02A
W20	Jumper	JPW-02A
W21	Jumper	JPW-02A
W22	Jumper	JPW-02A
W23	Jumper	JPW-02A
W24	Jumper	JPW-02A
W26	Wire	23/03/080/C22/W02
W27	Wire	23/02/110/C22/W02
W28	Wire	23/01/120/C22/W02
W29	Wire	62/99/065/C31/99
W30		08 99
W31	Wire	62/99/125/C31/99
W32		08 99
W33	Wire	72/98/030/X98/X98
W34	Wire	72/98/030/X98/X98
W35	Wire	72/98/030/X98/X98
W36	Wire	72/98/030/X98/X98
W37	Wire	72/98/030/X98/X98
W38	Wire	68/99/120/C31/W99
W39		08 99

[LOGIC UNIT]

REF. NO.	DESCRIPTION	PART NO.
IC1	IC	TA78L005AP
IC2	IC	μPD4069UBC
IC3	IC	SN74LS123
IC4	IC	μPD4081BC
IC5	IC	μPD4011BC
IC6	IC	μPD4081BC
IC7	IC	HD63A01V1D26P
IC8	IC	μPD446C
IC9	IC	μPD82C43C
IC10	IC	μPD82C43C
IC11	IC	BA618
IC12	IC	μPD4081BC
IC13	IC	μPD4081BC
IC14	IC	μPD4069UBC
IC15	IC	μPD4081BC
IC16	IC	μPD4528BC
Q1	Transistor	2SC2458 GR
Q2	Transistor	2SC2458 GR
Q3	Transistor	2SC2458 GR
Q4	Transistor	2SA1348
Q5	Transistor	2SC3402
Q6	Transistor	2SC3402
Q7	Transistor	2SC2458 GR
Q8	Transistor	2SC2458 GR
Q9	Transistor	2SC2458 GR
Q10	Transistor	2SC2458 GR
Q11	Transistor	2SC2458 GR
Q12	Transistor	2SA1348
Q13	Transistor	2SA1348
Q14	Transistor	2SA1348
Q15	Transistor	2SA1348
Q16	Transistor	2SC3399
Q17	Transistor	2SC2458 GR
Q18	Transistor	2SC2458 GR
Q19	Transistor	2SC3399
Q20	Transistor	2SC3399
Q21	FET	2SK30ATM Y
Q22	Transistor	2SA1348
D1	Diode	1SS133
D2	Diode	1SS133
D3	Diode	1SS133
D4	Diode	1SS133
D5	Diode	1SS133
D6	Diode	1SS133
D7	Diode	1SS133
D8	Diode	1SS133
D9	Diode	1S953
D10	Diode	1S953
D11	Diode	1SS133
D12	Diode	1SS133
D13	Diode	1SS133
D14	Diode	1SS133
D15	Diode	1SS133
D16	Diode	1SS133
D17	Diode	1SS133
D18	Diode	1SS133
D19	Diode	1SS133
D20	Diode	1SS133
D21	Diode	1SS133
D22	Diode	1SS133

[LOGIC UNIT]

REF. NO.	DESCRIPTION	PART NO.
D23	Diode	1SS133
D24	Diode	1SS133
D25	Diode	1SS133
D26	Diode	1SS133
D27	Diode	1SS133
D28	Diode	1SS133
D29	Diode	1SS133
D30	Diode	1SS133
D31	Diode	1SS133
D32	Diode	1SS133
D33	Diode	1SS133
D34	Diode	1SS133
D35	Diode	1SS133
D36	Diode	1SS133
D37	Diode	1SS133
D38	Diode	1SS133
D39	Diode	1SS133
D40	Diode	1SS133
D41	Diode	1SS133
D42	Diode	1SS133
D43	Diode	1SS133
D44	Diode	1SS133
D45	Diode	1SS133
D46	Diode	1SS133
D47	Diode	1SS133
D48	Diode	1SS133
D49	Diode	1SS133
D50	Diode	1SS133
D51	Diode	1SS133
D52	Diode	1SS133
D53	Diode	1SS133
D54	Diode	1SS133
D55	Diode	1SS133
D56	Diode	1SS133
D57	Diode	1SS133
D58	Diode	1SS133
D59	Diode	1SS133
D60	Zener	RD5.1E B2
D61	Zener	RD3.0E B2
D62	Diode	1S953
D64	Diode	1SS133
D65	Diode	1SS133
D66	Diode	1SS133
D67	Diode	1SS133 (#04, #05, #06 Only)
D68	Diode	1SS133 (#04, #05, #06 Only)
X1	Ceramic Resonator	CSA4.91MG
L1	Coil	LAL04NA 102K
L2	Coil	LAL04NA 102K
L3	Coil	LAL04NA 102K
L4	Coil	LAL04NA 102K
L5	Coil	LAL04NA 102K
L6	Coil	LAL04NA 102K
R1	Resistor	270 R20
R2	Resistor	1.5k ELR20
R3	Resistor	47k R25
R4	Resistor	1M ELR20

[LOGIC UNIT]

REF. NO.	DESCRIPTION	PART NO.	
R5	Resistor	47k	ELR20
R6	Resistor	470k	R20
R7	Resistor	47k	R20
R8	Resistor	10	R50X
R9	Resistor	100k	R20
R10	Resistor	47k	ELR20
R11	Resistor	47k	ELR20
R12	Resistor	47k	R20
R13	Resistor	10k	R20
R14	Resistor	47k	ELR20
R15	Array	RMX-4	10k
R16	Resistor	2.2M	ELR20
R17	Resistor	2.2M	ELR20
R18	Resistor	270k	R20
R19	Resistor	150k	ELR20
R20	Resistor	6.8k	ELR20
R21	Resistor	4.7k	ELR20
R22	Resistor	47k	ELR20
R23	Resistor	10k	R20
R24	Resistor	10k	ELR20
R25	Resistor	47k	R20
R26	Resistor	47k	ELR20
R27	Resistor	1.5M	ELR20
R28	Resistor	560k	R20
R29	Resistor	10k	R20
R30	Resistor	680k	R20
R31	Resistor	4.7k	ELR20
R32	Resistor	47k	ELR20
R33	Resistor	1M	R20
R34	Resistor	47k	ELR20
R35	Resistor	47k	R20
R36	Resistor	47k	R25
R37	Resistor	47k	R25
R38	Resistor	47k	R20
R39	Array	RMX-8	10k
R40	Resistor	10k	R20
R41	Resistor	4.7k	R20
R42	Resistor	47k	R20
R43	Array	SIP-11P-A1	
R44	Resistor	10k	R20
R45	Resistor	10k	R20
R46	Resistor	10k	R20
R47	Resistor	10k	R20
R48	Resistor	10k	R20
R49	Resistor	1k	R20
R50	Resistor	1k	R20
R51	Resistor	1k	R20
R52	Resistor	10k	R20
R53	Resistor	10k	ELR20
R54	Resistor	10k	ELR20
R55	Resistor	10k	R20
R56	Resistor	47k	ELR20
R57	Resistor	47k	ELR20
R58	Resistor	47k	ELR20
R59	Resistor	47k	R20
R60	Resistor	10k	R20
R61	Resistor	47k	R20
R62	Resistor	100k	R20
R63	Resistor	4.7k	ELR20
R64	Resistor	47k	R20
R65	Resistor	10k	R25
R66	Resistor	47k	R20
R67	Resistor	47k	R20
R68	Resistor	1k	ELR20

[LOGIC UNIT]

REF. NO.	DESCRIPTION	PART NO.	
R69	Resistor	1k	ELR20
R70	Resistor	100k	ELR20
C1	Barrier Layer	0.1	16V
C2	Electrolytic	1	50V
C3	Electrolytic	1	50V
C4	Barrier Layer	0.1	16V
C5	Barrier Layer	680P	50V
C6	Electrolytic	22	10V
C7	Ceramic	0.0047	50V
C9	Ceramic	0.001	50V
C10	Electrolytic	10	16V
C11	Electrolytic	0.47	50V
C12	Electrolytic	1	50V
C13	Barrier Layer	0.1	16V
C14	Ceramic	30P	50V
C15	Ceramic	30P	50V
C16	Array	B7ZC0711-32N	0.01×6
C17	Array	B5RC0124-32N	0.001×4
C18	Ceramic	0.0047	50V
C19	Ceramic	0.0047	50V
C20	Electrolytic	10	16V
C21	Barrier Layer	0.1	16V
C22	Ceramic	0.0047	50V
C23	Ceramic	0.0047	50V
C24	Barrier Layer	0.1	16V
C25	Ceramic	0.0047	50V
C26	Electrolytic	0.47	50V
C27	Barrier Layer	0.1	16V
C28	Electrolytic	0.47	50V
C29	Electrolytic	22	10V
C30	Barrier Layer	0.1	16V
J1	Connector	TL-25P-03-V1	
J2	Connector	TL-25P-08-V1	
J3	Connector	TL-25P-07-V1	
J4	Connector	TLB-P09H-B1	
J5	Connector	TL-25P-03-V1	
J6	Connector	TL-25P-06-V1	
J7	Connector	TL-25P-08-V1	
J8	Connector	TL-25P-10-V1	
J9	Connector	TLB-P06H-B1	
J10	Connector	TL-25P-04-V1	
J11	Connector	TLB-P03H-B1	
J12	Connector	TLB-P06H-B1	
J13	Connector	TLB-P08H-B1	
J14	Connector	TL-25P-08-V1	
J15	Connector	TL-25P-04-V1	
J16	Connector	TL-25P-08-V1	
J17	Connector	IMSA-9201B-2-16T	
J18	Connector	TL-25P-03-V1	
J19	Connector	TL-25P-06-V1	
J20	Connector	TL-25P-03-V1	
J21	Connector	TL-25P-03-V1	
J22	RT Pin	RT-01T-1.0B (#04, #05, #06 Only)	
J23	RT Pin	RT-01T-1.0B (#04, #05, #06 Only)	

[LOGIC UNIT]

REF. NO.	DESCRIPTION	PART NO.
P1	Connector	TL-25H-08-B1
P2	Connector	TL-25H-06-B1
P3	Connector	TL-25H-03-B1
P4	Connector	TL-25H-06-B1
P5	Connector	TL-25H-08-B1
P6	Connector	IMSA-9201B-HT
P7	Connector	IMSA-9201B-HT
P8	Connector	IMSA-9201B-HT
P9	Connector	001T410
P10	Connector	001T410
BT1	Lithium Battery	BR2032-1T2
EP1	P.C. Board	B-995C
W2	Jumper	IPS-1041-2
W3	Jumper	IPS-1041-2
W4	Jumper	IPS-1041-2
W5	Jumper	IPS-1041-4
W6	Jumper	IPS-1041-4
W7	Jumper	IPS-1041-4
W8	Jumper	IPS-1041-2
W9	Jumper	IPS-1041-2
W10	Jumper	IPS-1041-4
W11	Jumper	IPS-1041-4
W12	Jumper	IPS-1041-4
W13	Jumper	IPS-1041-4
W14	Jumper	IPS-1041-2
W16	Jumper	IPS-1041-4
W17	Jumper	IPS-1041-4
W18	Jumper	IPS-1041-4
W19	Jumper	IPS-1041-4
W20	Jumper	IPS-1041-4
W21	Jumper	IPS-1041-2
W22	Jumper	IPS-1041-4
W23	Jumper	IPS-1041-4
W24	Jumper	IPS-1041-4
W25	Jumper	IPS-1041-4
W26	Jumper	IPS-1041-4
W27	Jumper	IPS-1041-4
W28	Jumper	IPS-1041-4
W29	Jumper	IPS-1041-2
W30	Jumper	IPS-1041-4
W31	Jumper	IPS-1041-2
W32	Jumper	JPW-02A
W33	Jumper	IPS-1041-2
W34	Jumper	IPS-1041-2
W35	Jumper	IPS-1041-2
W36	Jumper	IPS-1041-2
W37	Jumper	IPS-1041-4
W38	Jumper	JPW-02A
W39	Jumper	IPS-1041-4
W40	Jumper	IPS-1041-4
W41	Jumper	IPS-1041-4
W42	Jumper	IPS-1041-2
W43	Jumper	IPS-1041-4
W44	Jumper	IPS-1041-4
W45	Jumper	IPS-1041-4
W46	Jumper	IPS-1041-4
W47	Jumper	IPS-1041-4

[LOGIC UNIT]

REF. NO.	DESCRIPTION	PART NO.
W48	Jumper	IPS-1041-4
W49	Jumper	IPS-1041-2
W50	Jumper	IPS-1041-4
W51	Jumper	IPS-1041-4
W52	Jumper	IPS-1041-4
W53	Jumper	IPS-1041-4
W54	Jumper	IPS-1041-2
W55	Jumper	IPS-1041-4
W56	Jumper	IPS-1041-2
W57	Jumper	IPS-1041-2
W58	Jumper	IPS-1041-4
W59	Jumper	IPS-1041-4
W60	Jumper	IPS-1041-4
W64	Jumper	IPS-1041-4
W65	Jumper	IPS-1041-4
W66	Jumper	IPS-1041-4
W67	Jumper	IPS-1041-4
W68	Jumper	IPS-1041-4
W69	Jumper	IPS-1041-2
W70	Jumper	IPS-1041-4
W71	Jumper	IPS-1041-2
W72	Jumper	IPS-1041-2
W73	Jumper	IPS-1041-4
W74	Jumper	IPS-1041-2
W75	Jumper	IPS-1041-2
W76	Jumper	IPS-1041-4
W77	Jumper	IPS-1041-2
W78	Jumper	IPS-1041-2
W79	Jumper	IPS-1041-2
W80	Jumper	IPS-1041-2
W81	Jumper	IPS-1041-4
W82	Jumper	IPS-1041-2
W83	Jumper	IPS-1041-4
W84	Jumper	IPS-1041-2
W85	Jumper	IPS-1041-4
W86	Jumper	IPS-1041-2
W87	Jumper	IPS-1041-2
W88	Jumper	IPS-1041-2
W89	Jumper	IPS-1041-2
W90	Jumper	IPS-1041-4
W91	Jumper	IPS-1041-4
W92	Jumper	IPS-1041-2
W93	Jumper	IPS-1041-4
W94	Jumper	IPS-1041-4
W95	Jumper	IPS-1041-4
W96	Jumper	IPS-1041-2
W97	Jumper	IPS-1041-4
W98	Jumper	IPS-1041-4
W99	Jumper	IPS-1041-2
W100	Jumper	IPS-1041-2
W101	Jumper	IPS-1041-2
W102	Jumper	IPS-1041-4
W103	Jumper	IPS-1041-4
W104	Jumper	IPS-1041-4
W105	Jumper	IPS-1041-2
W106	Jumper	IPS-1041-2
W107	Jumper	IPS-1041-4
W108	Jumper	IPS-1041-4
W109	Jumper	IPS-1041-4
W110	Jumper	IPS-1041-4
W111	Jumper	IPS-1041-4
W112	Jumper	IPS-1041-4
W113	Jumper	IPS-1041-2
W114	Jumper	IPS-1041-2

[LOGIC UNIT]

REF. NO.	DESCRIPTION	PART NO.
W115	Jumper	IPS-1041-2 (#04, #05, #06 Only)
W116	Wire	23/05/050/C21/C32G (#04, #05, #06 Only)
W117	Wire	23/01/230/C01/C22
W118	Wire	23/02/230/C01/C22
W119	Wire	23/03/230/C01/C22
W120	Wire	23/04/230/C01/C22
W121	Wire	23/05/230/C01/C22
W122	Wire	23/06/230/C01/C22
W123	Wire	23/07/230/C01/C22
W124	Wire	23/08/230/C01/C22
W125	Wire	23/01/370/C01/C22
W126	Wire	23/02/370/C01/C22
W127	Wire	23/03/370/C01/C22
W128	Wire	23/04/370/C01/C22
W129	Wire	23/05/370/C01/C22
W130	Wire	23/06/370/C01/C22
W131	Wire	23/01/320/C01/C22
W132	Wire	23/02/320/C01/C22
W133	Wire	23/03/320/C01/C22
W134	Wire	23/01/270/C01/C22
W135	Wire	23/02/270/C01/C22
W136	Wire	23/03/270/C01/C22
W137	Wire	23/04/270/C01/C22
W138	Wire	23/05/270/C01/C22
W139	Wire	23/06/270/C01/C22
W140	Wire	23/01/280/C01/C22
W141	Wire	23/02/280/C01/C22
W142	Wire	23/03/280/C01/C22
W143	Wire	23/04/280/C01/C22
W144	Wire	23/05/280/C01/C22
W145	Wire	23/06/280/C01/C22
W146	Wire	23/07/280/C01/C22
W147	Wire	23/08/280/C01/C22
W148	Wire	23/08/250/C21/C21
W149	Wire	23/09/110/C21/C21
W150	Wire	23/00/080/C21/C21
W151	Wire	23/01/110/C21/C21
W152	Wire	23/02/220/C21/C21
W153	Wire	23/03/180/C21/C21
W154	Wire	23/04/210/C32G/C21

[PLL UNIT]

REF. NO.	DESCRIPTION	PART NO.
IC1	IC	µA78M08
IC2	IC	NJM78M05A
IC3	IC	M54929P
IC4	IC	M54466L
IC5	IC	µPC1651G
IC6	IC	ND487C1-3R
IC7	IC	HD10551
IC8	IC	ND487C1-3R
IC9	IC	µPC1651G
IC10	IC	µPC1651G
IC11	IC	M5218L
Q1	Transistor	2SC3355
Q2	Transistor	2SC3355
Q3	Transistor	2SC3399
Q4	Transistor	2SA1345
Q5	Transistor	2SC1571 G
Q6	FET	2SK162 L/M
Q8	Transistor	2SA1015 Y
Q9	Transistor	2SC3399
Q10	Transistor	2SC763 C
Q11	FET	2SK241 GR
Q12	Transistor	2SC3355
Q13	FET	2SK162 L/M
Q14	Transistor	2SA1015 Y
Q15	Transistor	2SC383TM
Q16	Transistor	2SC763 C
Q17	FET	2SK241 GR
Q18	Transistor	2SC3355
Q19	Transistor	2SC1571 G
Q20	Transistor	2SA1015 Y
Q21	Transistor	2SA1015 Y
Q22	Transistor	2SA1015 Y
Q23	Transistor	2SC3399
Q24	Transistor	2SC383TM
Q25	Transistor	2SC763 C
Q26	FET	2SK241 GR
Q27	Transistor	2SC3355
Q28	Transistor	2SC3355
Q29	Transistor	2SC3355
Q30	Transistor	2SC3402
Q31	Transistor	2SC2785 HF/FF
D1	Diode	1SS216
D2	Diode	1SS216
D3	Diode	1SS53
D4	Diode	1SS53
D5	Diode	1SS53
D6	Diode	1SS53
D7	Diode	1SS53
D8	Diode	1SS216
D9	Diode	1SS53
D10	Diode	1SS53
D11	Diode	1SS53
D12	Diode	1SS53
D13	Diode	1SS53
D14	Diode	1SS53
D15	Diode	1SS53
D17	Varicap	1SV50E (1)
D18	Diode	1SS53
D19	Diode	1SS53
D20	Diode	1SS216

[PLL UNIT]

REF. NO.	DESCRIPTION	PART NO.
D21	Diode	1SS53
D23	Diode	1SS53
D24	Diode	1SS216
D26	Zener	RD8.2E B3
D27	Diode	1SS216
D28	Diode	1SS216
D29	Diode	1SS216
D30	Zener	RD8.2E B3
X1	Crystal	CR116
X2	Crystal	CR115
L1	Coil	LAL03NA 101K
L2	Coil	LAL04NA 101K
L3	Coil	LQN5N 1R0M
L4	Coil	LAL03NA 101K
L5	Coil	LR-168
L6	Coil	LW-19
L7	Coil	LAL03NA 101K
L8	Coil	LAL03NA 101K
L9	Coil	LA-233
L10	Coil	LA-242
L11	Coil	LR-145
L12	Coil	LR-145
L13	Coil	LAL03NA 101K
L14	Coil	PA252HT-1876A
L15	Coil	252MX-1857F
L16	Coil	LAL04NA 102K
L17	Coil	LAL02KR 101K
L18	Coil	LS-259
L19	Coil	LS-259
L20	Coil	LS-259
L21	Coil	LS-145
L22	Coil	LAL03NA R33M
L23	Coil	252HE-1821A
L24	Coil	LW-19
L25	Coil	252HE-1821A
L26	Coil	LR-145
L27	Coil	LR-116
L28	Coil	LAL02KR 4R7K
L29	Coil	LS-114
L30	Coil	LS-114
L31	Coil	LS-230A
L32	Coil	LS-230A
L33	Coil	LS-230A
L34	Coil	LS-229
L35	Coil	LAL03NA R33M
L36	Coil	252MX-1828F
L37	Coil	LAL03NA 101K
L38	Coil	252MX-1828F
L39	Coil	LS-130A
L40	Coil	LS-94
L41	Coil	LS-230A
L42	Coil	LS-230A
L43	Coil	LS-230A
L44	Coil	LS-229
L45	Coil	LAL03NA R33M
L46	Coil	252HA-1822F
L47	Coil	LAL03NA R33M
L48	Coil	252HA-1822F
L49	Coil	LS-230A
L51	Coil	LQN5N 1R0M

[PLL UNIT]

REF. NO.	DESCRIPTION	PART NO.	
L52	Coil	LAL03NA 101K	
L53	Coil	LAL03NA 101K	
L56	Coil	LAL04NA 102K	
L58	Coil	LAL03NA 101K	
L59	Coil	LAL03NA 101K	
L60	Coil	LW-19	
L61	Coil	LAL03NA 101K	
L62	Coil	LAL03NA 101K	
L63	Coil	LAL03NA 101K	
L64	Coil	LAL03NA 101K	
L65	Coil	LAL03NA 101K	
L66	Coil	LAL03NA 101K	
L67	Coil	LAL03NA 101K	
L68	Coil	LAL03NA 101K	
L69	Coil	LAL03NA 101K	
L70	Coil	LW-19	
L71	Coil	LAL03NA 101K	
L73	Coil	LAL04NA 102K	
L74	Coil	LAL02KR 101K	
L75	Coil	LQN5N 1R0M	
L76	Coil	LAL03NA 100K	
L77	Coil	LA-233	
R1	Resistor	10	CRB25FX
R2	Resistor	4.7k	R20
R3	Resistor	4.7k	R20
R4	Resistor	1.5k	R20
R5	Resistor	470	R20
R6	Resistor	1k	R20
R7	Resistor	22	MCR10
R8	Resistor	6.8k	MCR10
R9	Resistor	1k	R20
R10	Resistor	270	MCR10
R11	Resistor	270	MCR10
R12	Resistor	15	MCR10
R13	Resistor	22k	R20
R14	Resistor	10k	R20
R15	Resistor	390	R20
R16	Resistor	2.7k	R20
R17	Resistor	4.7k	R20
R18	Resistor	10k	ELR20
R19	Resistor	3.3k	ELR20
R20	Resistor	15k	ELR20
R21	Trimmer	RHB0C1431A 10K	
R22	Trimmer	RHB0CJ401A 22K	
R23	Resistor	22	R20
R24	Resistor	100	R20
R25	Resistor	6.8k	R20
R26	Resistor	1.5k	ELR20
R27	Resistor	100	R20
R28	Resistor	8.2k	R20
R29	Resistor	3.9k	R20
R30	Resistor	150k	R20
R31	Resistor	100	R20
R32	Resistor	1k	R20
R33	Resistor	100	R20
R34	Resistor	1k	MCR10
R35	Resistor	1.5k	ELR20
R36	Resistor	10k	ELR20
R37	Resistor	2.2k	ELR20
R38	Resistor	47	ELR20
R39	Resistor	100	R20
R40	Resistor	22k	ELR20

[PLL UNIT]

REF. NO.	DESCRIPTION	PART NO.
R41	Resistor	4.7k ELR20
R42	Resistor	220 ELR20
R43	Resistor	47k ELR20
R44	Resistor	100 R20
R45	Resistor	100 ELR20
R46	Resistor	100 R20
R47	Resistor	22k ELR20
R48	Resistor	1.5k ELR20
R49	Trimmer	RHB0CS511A 470K
R50	Resistor	470k ELR20
R51	Resistor	180k ELR20
R52	Resistor	100 R20
R53	Resistor	220 ELR20
R54	Resistor	1.5k ELR20
R55	Resistor	10k R20
R56	Resistor	100k ELR20
R57	Resistor	2.2k ELR20
R58	Trimmer	RHB0C151XA 100K
R59	Resistor	100k R20
R60	Resistor	47 R20
R61	Resistor	100 R20
R62	Resistor	220 R20
R63	Resistor	22k ELR20
R64	Resistor	4.7k ELR20
R65	Resistor	1k R20
R66	Resistor	47 R20
R67	Resistor	100 R20
R68	Resistor	22k ELR20
R69	Resistor	4.7k R20
R70	Resistor	220 ELR20
R71	Resistor	100 R20
R72	Resistor	47k ELR20
R73	Resistor	100 ELR20
R74	Resistor	100 ELR20
R75	Resistor	22k ELR20
R76	Resistor	1.5k ELR20
R77	Resistor	560k ELR20
R79	Resistor	470 R20
R80	Resistor	100 R20
R81	Resistor	3.3k R20
R82	Resistor	10k ELR20
R83	Resistor	100 ELR20
R84	Resistor	10k ELR20
R86	Resistor	2.2k ELR20
R87	Resistor	10k R20
R88	Resistor	2.2k R20
R89	Resistor	220 R20
R90	Resistor	10k ELR20
R91	Resistor	4.7k ELR20
R92	Resistor	1k ELR20
R93	Resistor	47 R20
R94	Resistor	100 R20
R95	Resistor	15k ELR20
R96	Resistor	4.7k ELR20
R97	Resistor	150 ELR20
R98	Resistor	100 R20
R99	Resistor	47k ELR20
R100	Resistor	100 ELR20
R101	Resistor	1.5k R20
R102	Resistor	100 ELR20
R104	Resistor	100 R20
R105	Resistor	27k ELR20
R106	Resistor	2.7k ELR20
R107	Resistor	100 R20

[PLL UNIT]

REF. NO.	DESCRIPTION	PART NO.
R108	Resistor	4.7k ELR20
R109	Resistor	470 ELR20
R110	Resistor	1k ELR20
R111	Resistor	100 R20
R113	Resistor	100 ELR20
R114	Resistor	1.5k ELR20
R115	Resistor	1k ELR20
R117	Resistor	1.5k R20
R118	Resistor	100 ELR20
R119	Resistor	22 R20
R120	Resistor	2.2k ELR20
R121	Resistor	1k ELR20
R122	Resistor	22 R20
R123	Resistor	150 MCR10
R124	Resistor	39 MCR10
R125	Resistor	150 MCR10
R126	Resistor	150 R20
R127	Resistor	39 ELR20
R128	Resistor	150 R20
R132	Resistor	270 R20
R133	Resistor	15 R20
R134	Resistor	270 R20
R135	Resistor	270 ELR20
R136	Resistor	15 R20
R137	Resistor	270 ELR20
R138	Resistor	150 ELR20
R139	Resistor	39 R20
R140	Resistor	150 ELR20
R141	Resistor	47 R50X
R142	Resistor	47 R50X
C1	Electrolytic	33 16V
C2	Barrier Layer	0.1 16V
C3	Electrolytic	220 10V
C4	Barrier Layer	0.1 16V
C5	Electrolytic	100 10V
C6	Barrier Layer	0.1 16V
C7	Electrolytic	47 10V
C8	Ceramic	0.0047 50V
C9	Ceramic	D55X5T1H473M51 0.047
C10	Ceramic	D67X5T1H684M51 0.68
C11	Ceramic	470P 50V
C12	Electrolytic	100 10V
C13	Ceramic	D55X5T1H104M51 0.1
C14	Electrolytic	22 6.3V RC2
C15	Electrolytic	47 10V
C16	Electrolytic	100 16V
C17	Ceramic	D55X5T1H104M51 0.1
C18	Feed Through	TF240-602 SS332Z 50V
C19	Barrier Layer	0.1 16V
C20	Monolithic	470P GRM40
C21	Monolithic	470P GRM40
C22	Monolithic	22P GRM40
C23	Ceramic	0.001 50V
C24	Ceramic	120P 50V
C25	Ceramic	68P 50V
C26	Array	B7ZC0717-32N 470P×6
C27	Barrier Layer	0.1 16V
C28	Ceramic	0.0047 50V
C29	Ceramic	0.0047 50V
C30	Ceramic	0.0047 50V
C31	Ceramic	0.0047 50V
C32	Ceramic	0.0047 50V

[PLL UNIT]

REF. NO.	DESCRIPTION	PART NO.
C33	Ceramic	0.001 50V
C34	Feed Through	TF240-602 SS332Z 50V
C35	Feed Through	TF240-602 SS332Z 50V
C36	Feed Through	TF240-602 SS332Z 50V
C37	Feed Through	TF240-602 SS332Z 50V
C38	Ceramic	4P 50V
C39	Ceramic	18P 50V
C40	Ceramic	27P 50V
C41	Ceramic	10P 50V
C42	Ceramic	22P 50V
C43	Ceramic	0.001 50V
C44	Ceramic	0.001 50V
C45	Ceramic	0.001 50V
C46	Monolithic	470P GRM40
C47	Feed Through	TF240-602 SS332Z 50V
C48	Monolithic	470P GRM40
C49	Ceramic	470P 50V
C50	Ceramic	470P 50V
C51	Feed Through	TF240-602 SS332Z 50V
C52	Ceramic	470P 50V
C53	Ceramic	22P 50V
C54	Ceramic	22P 50V
C55	Ceramic	22P 50V
C56	Ceramic	22P 50V
C57	Feed Through	TF240-602 SS332Z 50V
C58	Ceramic	0.001 50V
C59	Ceramic	0.0047 50V
C60	Ceramic	0.0047 50V
C61	Electrolytic	47 6.3V MS7
C62	Ceramic	100P 50V
C63	Ceramic	0.001 50V
C64	Ceramic	5P 50V
C65	Ceramic	0.001 50V
C66	Ceramic	6P 50V
C67	Ceramic	6P 50V
C68	Ceramic	0.5P 50V
C69	Ceramic	0.5P 50V
C70	Ceramic	0.5P 50V
C71	Ceramic	0.001 50V
C72	Ceramic	3P 50V
C73	Ceramic	0.001 50V
C74	Ceramic	100P 50V
C75	Ceramic	470P 50V
C76	Ceramic	470P 50V
C77	Ceramic	5P 50V
C78	Ceramic	6P 50V
C79	Cylinder	UP125SL8R2K-NA 8.2P
C80	Cylinder	UP125SL5R6K-NA 5.6P
C81	Electrolytic	47 10V
C82	Feed Through	TF240-602 SS332Z 50V
C83	Electrolytic	47 10V
C84	Ceramic	47P 50V
C85	Ceramic	120P 50V
C86	Ceramic	100P 50V
C87	Cylinder	UP125SL101J-NA 100P
C88	Ceramic	15P 50V
C89	Feed Through	TF240-602 SS332Z 50V
C90	Ceramic	0.001 50V
C91	Dip Mica	100P 50V
C92	Dip Mica	100P 50V
C93	Ceramic	0.001 50V
C94	Ceramic	0.35P 50V
C95	Ceramic	100P 50V
C96	Ceramic	0.001 50V

[PLL UNIT]

REF. NO.	DESCRIPTION	PART NO.
C97	Ceramic	9P 50V
C98	Ceramic	0.001 50V
C99	Ceramic	10P 50V
C100	Ceramic	10P 50V
C101	Ceramic	0.75P 50V
C102	Ceramic	0.75P 50V
C103	Ceramic	2P 50V
C104	Ceramic	0.001 50V
C105	Ceramic	8P 50V
C106	Ceramic	0.001 50V
C107	Ceramic	100P 50V
C108	Ceramic	470P 50V
C109	Ceramic	470P 50V
C110	Cylinder	UP125SL8R2K-NA 8.2P
C111	Ceramic	8P 50V
C112	Cylinder	UP125SL8R2K-NA 8.2P
C113	Monolithic	15P GRM40
C114	Monolithic	4P GRM40
C115	Monolithic	18P GRM40
C116	Monolithic	3P GRM40
C117	Ceramic	33P 50V
C118	Ceramic	470P 50V
C119	Feed Through	TF240-602 SS332Z 50V
C120	Ceramic	0.001 50V
C121	Ceramic	10P 50V UJ
C122	Dip Mica	47P 50V
C123	Dip Mica	39P 50V
C124	Ceramic	22P 50V UJ
C125	Ceramic	0.001 50V
C126	Ceramic	470P 50V
C127	Ceramic	470P 50V
C128	Ceramic	0.001 50V
C129	Ceramic	6P 50V
C130	Ceramic	0.001 50V
C131	Ceramic	6P 50V
C132	Ceramic	6P 50V
C133	Ceramic	0.5P 50V
C134	Ceramic	0.5P 50V
C135	Ceramic	0.5P 50V
C136	Ceramic	0.001 50V
C137	Ceramic	3P 50V
C138	Ceramic	0.001 50V
C139	Ceramic	470P 50V
C140	Ceramic	470P 50V
C141	Ceramic	D55X5T1H104M51 0.1
C142	Ceramic	470P 50V
C143	Ceramic	22P 50V
C144	Ceramic	120P 50V
C145	Ceramic	22P 50V
C146	Ceramic	22P 50V
C147	Ceramic	5P 50V
C148	Ceramic	470P 50V
C149	Ceramic	0.001 50V
C150	Ceramic	5P 50V
C151	Ceramic	22P 50V
C152	Ceramic	4P 50V
C153	Ceramic	100P 50V
C154	Feed Through	TF240-602 SS332Z 50V
C155	Feed Through	TF240-602 SS332Z 50V
C156	Ceramic	470P 50V
C157	Ceramic	4P 50V
C158	Ceramic	470P 50V
C159	Ceramic	470P 50V
C160	Ceramic	120P 50V

[PLL UNIT]

REF. NO.	DESCRIPTION	PART NO.
C161	Ceramic	47P 50V
C162	Ceramic	3P 50V
C163	Cylinder	UP125SL3R3K-NA 3.3P
C164	Monolithic	22P GRM40
C165	Ceramic	22P 50V
C166	Ceramic	470P 50V
C167	Ceramic	22P 50V
C168	Monolithic	4P GRM40
C169	Monolithic	2P GRM40
C170	Monolithic	4P GRM40
C171	Monolithic	1P GRM40
C172	Monolithic	4P GRM40
C173	Monolithic	22P GRM40
C174	Monolithic	120P GRM40
C175	Monolithic	3P GRM40
C176	Ceramic	0.001 50V
C177	Electrolytic	100 16V
C178	Electrolytic	100 10V
C179	Electrolytic	100 10V
C180	Ceramic	33P 50V
C181	Ceramic	33P 50V
C182	Ceramic	120P 50V
C183	Ceramic	120P 50V
C184	Ceramic	470P 50V
C185	Ceramic	470P 50V
C186	Ceramic	470P 50V
C187	Ceramic	120P 50V
C188	Monolithic	2P GRM40
C189	Monolithic	3P GRM40
C190	Monolithic	4P GRM40
C191	Monolithic	3P GRM40
C192	Monolithic	5P GRM40
C193	Ceramic	0.001 50V
C194	Ceramic	47P 50V
C195	Monolithic	2P GRM40
C196	Monolithic	15P GRM40
C197	Monolithic	470P GRM40
C198	Monolithic	120P GRM40
C199	Electrolytic	47 10V
J1	Connector	TL-25P-03-V1
J2	Connector	TMP-J01X-V1
J3	Connector	TL-25P-08-V1
J4	Connector	TLB-P03H-B1
J5	Connector	TL-25P-03-V1
J6	Connector	TMP-J01X-V1
P1	Connector	TL-25H-04-B1
P2	Connector	TL-25H-03-B1
EP1	P.C. Board	B-993C
EP2	Bead Core	DL2-0P2.6-3-1.2H
EP3	P.C. Board	B-1179C
W1	Wire	51/09/320/C01A/C22A
W2		08 A A
W3	Wire	23/04/320/C01/C22
W4	Wire	23/02/500/C01/C21
W5	Wire	23/06/630/C01/C21
W6	Wire	23/08/490/C01/C21

[PLL UNIT]

REF. NO.	DESCRIPTION	PART NO.
W7	Wire	23/00/470/C01/C21
W8	Wire	23/07/200/C21/C21
W9	Wire	23/04/230/C21/C21
W10	Wire	23/03/190/C21/C21
W11	Wire	61/99/075/W13A/W13A
W12		08 A A
W13	Wire	23/09/060/W02/C21
W14	Wire	61/99/070/W13A/W13A
W15		08 A A
W16	Wire	23/01/110/C21/C21
W17	Wire	61/99/060/W13A/W13A
W18		08 A A
W19	Wire	23/02/100/C21/C21
W20	Wire	23/05/140/C21/C21
W21	Wire	23/06/150/C21/C21
W23	Jumper	JPW-02A
W24	Jumper	JPW-02A
W25	Jumper	JPW-02A
W26	Jumper	JPW-02A
W27	Wire	72/98/030/X98/X98
W28	Wire	72/98/030/X98/X98
W29	Wire	72/98/030/X98/X98

[VCO UNIT]

REF. NO.	DESCRIPTION	PART NO.
Q1	FET	2SK125
Q2	Transistor	2SC3356
Q3	FET	2SK125
Q4	Transistor	2SC3356
D1	Varicap	1T25
D2	Varicap	1T25
D3	Varicap	1T25
D4	Varicap	1T25
D5	Diode	1SS216
D6	Varicap	1T25
D7	Varicap	1T25
D8	Varicap	1T25
D9	Varicap	1T25
D10	Diode	1SS216
L1	Coil	LW-19
L3	Coil	LQN5N 1R0M
L4	Coil	LQN5N 1R0M
L5	Coil	LQN5N 1R0M
L6	Coil	LW-19
L8	Coil	LQN5N 1R0M
L9	Coil	LQN5N 1R0M
L10	Coil	LQN5N 1R0M
L11	Coil	LQN5N 1R0M
R1	Resistor	220 MCR10
R2	Resistor	1.5k MCR10
R3	Resistor	3.9k MCR10
R4	Resistor	100 MCR10
R5	Resistor	10 MCR10
R6	Resistor	100 MCR10
R7	Resistor	220 MCR10
R8	Resistor	1.5k MCR10
R9	Resistor	3.9k MCR10
R10	Resistor	100 MCR10
R11	Resistor	100 MCR10
R12	Resistor	10 MCR10
R13	Resistor	1.5k MCR10
R14	Resistor	470 MCR10
R15	Resistor	470 MCR10
C1	Monolithic	3P GRM40CH
C2	Monolithic	3P GRM40CH
C3	Monolithic	470P GRM40
C4	Monolithic	470P GRM40
C5	Monolithic	0.5P GRM40
C6	Electrolytic	220 10V
C7	Monolithic	470P GRM40
C8	Monolithic	6P GRM40
C9	Monolithic	470P GRM40
C10	Tantalum	DN1V4R7M1S 4.7
C11	Monolithic	470P GRM40
C12	Monolithic	3P GRM40CH
C13	Monolithic	3P GRM40CH
C14	Monolithic	470P GRM40
C15	Monolithic	470P GRM40
C16	Monolithic	0.5P GRM40
C17	Electrolytic	220 10V
C18	Monolithic	0.001 GRM40

[VCO UNIT]

REF. NO.	DESCRIPTION	PART NO.
C19	Monolithic	6P GRM40
C21	Monolithic	470P GRM40
EP1	P.C. Board	B-994B
EP2	P.C. Board	B-1100A
W1	Wire	72/98/030/X98/X98
W2	Wire	72/98/030/X98/X98
W3	Wire	72/98/030/X98/X98

[DISPLAY UNIT]

REF. NO.	DESCRIPTION	PART NO.	
IC1	IC	μPD549C	
IC2	IC	μPD549C	
IC3	IC	TA78L005AP	
Q1	Transistor	2SC2458 GR	
Q2	Transistor	2SC2458 GR	
Q3	Transistor	2SC2458 GR	
Q4	Transistor	2SC2458 GR	
Q5	Transistor	2SC2458 GR	
Q6	Transistor	2SA1345	
Q7	Transistor	2SA1345	
Q8	Transistor	2SA1345	
Q9	Transistor	2SA1345	
Q10	Transistor	2SA1345	
Q11	Transistor	2SC2655	
Q12	Transistor	2SC2655	
Q13	Transistor	2SA1348	
Q14	Transistor	2SC3399	
D1	Diode	1SS55	
D2	Diode	1SS55	
D3	Zener	RD6.2E B2	
D4	Zener	RD24E B2	
D5	Zener	RD5.1E B2	
D6	Diode	1SS55	
D7	Diode	1SS55	
D8	Diode	1SS55	
D9	Diode	1SS55	
D10	Diode	1SS55	
D11	Diode	1SS55	
D12	Diode	1SS55	
D13	Diode	1SS55	
D14	Diode	1SS55	
D15	Diode	1SS55	
D16	Diode	1SS55	
L1	Coil	FL9H 102J	
R1	Resistor	1k	R20
R2	Resistor	1k	R20
R3	Resistor	1k	R20
R4	Resistor	1k	R20
R5	Resistor	1k	ELR20
R6	Resistor	1k	ELR20
R7	Resistor	1k	ELR20
R8	Resistor	1k	ELR20
R9	Resistor	1k	ELR20
R10	Resistor	1k	R20
R11	Array	RMX-6	47k
R12	Array	RMX-10	47k
R13	Array	RMX-8	47k
R14	Resistor	47k	ELR20
R15	Resistor	47k	ELR20
R16	Resistor	47k	ELR20
R17	Resistor	47k	ELR20
R18	Resistor	47k	ELR20
R19	Array	RMX-6	47k
R20	Array	RMX-8	47k
R21	Resistor	47k	ELR20
R22	Resistor	47k	ELR20

[DISPLAY UNIT]

REF. NO.	DESCRIPTION	PART NO.		
R23	Resistor	47k	ELR20	
R24	Resistor	47k	ELR20	
R25	Resistor	2.7k	ELR20	
R26	Resistor	2.7k	ELR20	
R27	Resistor	2.7k	ELR20	
R28	Resistor	2.7k	ELR20	
R29	Resistor	2.7k	ELR20	
R30	Resistor	82	ELR20	
R31	Resistor	5.6k	R20	
R32	Resistor	5.6k	R20	
R33	Resistor	47	R20	
R34	Array	RMX-4	47k	
R35	Resistor	47k	R20	
R36	Resistor	47k	ELR20	
R37	Resistor	2.7k	R20	
R38	Resistor	6.8	R20	
R39	Resistor	2.7k	ELR20	
R40	Resistor	47k	R20	
R41	Resistor	10k	ELR20	
R42	Resistor	470k	ELR20	
C1	Array	B5RC0124-32N	0.001×4	
C2	Ceramic	0.001	50V	
C3	Array	B5RC0124-32N	0.001×4	
C4	Ceramic	0.001	50V	
C5	Ceramic	0.0047	50V	
C6	Ceramic	0.0047	50V	
C7	Barrier Layer	0.1	16V	
C8	Barrier Layer	0.1	16V	
C9	Barrier Layer	0.1	16V	
C10	Barrier Layer	0.1	16V	
C11	Barrier Layer	0.1	16V	
C12	Array	B5RC0124-32N	0.001×4	
C13	Ceramic	0.001	50V	
C14	Ceramic	0.0047	50V	
C15	Ceramic	0.0047	50V	
C16	Ceramic	0.001	50V	
C17	Electrolytic	100	16V	
C18	Electrolytic	10	16V	RC2
C19	Electrolytic	10	16V	RC2
C20	Electrolytic	10	16V	RC2
C21	Electrolytic	4.7	25V	RC2
C22	Electrolytic	3.3	50V	RC2
C23	Electrolytic	3.3	50V	RC2
C24	Ceramic	0.0047	50V	
C25	Ceramic	0.0047	50V	
J1	Connector	TLB-P06H-B1		
J2	Connector	TLB-P04H-B1		
J3	Connector	TL-25P-03-L1		
J4	Connector	TLB-P04H-B1		
J5	Connector	SB-20P-HVQ-28		
J6	Connector	SB-10P-HVQ-28		
J7	Connector	SB-13P-HVQ-28		
P1	Connector	TL-25H-04-B1		
P2	Connector	TL-25H-10-B1		
P3	Connector	TL-25H-04-B1		
P4	Connector	TL-25H-03-B1		

[DISPLAY UNIT]

REF. NO.	DESCRIPTION	PART NO.
DS1	FLD	FIP9KM7
T1	Transformer	TO-9
EP1	P.C. Board	B-996C
EP2	P.C. Board	B-742F
W1	Wire	23/01/100/C21/C21
W2	Wire	23/02/100/C21/C21
W3	Wire	23/03/090/C21/C21
W4	Wire	23/04/180/C21/C21
W5	Wire	23/05/140/C21/C21
W6	Wire	23/06/140/C21/C21
W7	Wire	23/07/090/C21/C21
W8	Wire	23/08/140/C21/C21
W9	Wire	23/09/120/C21/C21
W10	Jumper	IPS-1041-2
W11	Jumper	IPS-1041-4
W12	Jumper	IPS-1041-2
W13	Jumper	IPS-1041-2
W14	Jumper	IPS-1041-2
W15	Jumper	IPS-1041-4
W16	Jumper	IPS-1041-2
W17	Jumper	IPS-1041-2
W18	Jumper	IPS-1041-2
W19	Jumper	IPS-1041-2
W20	Jumper	IPS-1041-2
W21	Jumper	IPS-1041-4
W22	Jumper	IPS-1041-2
W23	Jumper	IPS-1041-4
W24	Jumper	IPS-1041-2
W25	Jumper	IPS-1041-4
W26	Jumper	IPS-1041-4
W27	Jumper	IPS-1041-2
W28	Jumper	IPS-1041-4
W29	Jumper	IPS-1041-4
W30	Jumper	IPS-1041-2
W31	Jumper	IPS-1041-4
W32	Jumper	IPS-1041-4
W33	Jumper	IPS-1041-4
W34	Jumper	IPS-1041-4
W35	Jumper	IPS-1041-4
W36	Jumper	IPS-1041-2
W37	Jumper	IPS-1041-4
W38	Jumper	IPS-1041-2
W39	Jumper	IPS-1041-4
W40	Jumper	IPS-1041-4
W41	Jumper	IPS-1041-4
W42	Jumper	IPS-1041-4
W43	Jumper	IPS-1041-4
W44	Jumper	IPS-1041-4
W45	Jumper	IPS-1041-4
W46	Jumper	IPS-1041-2
W47	Jumper	IPS-1041-4
W48	Jumper	IPS-1041-4
W49	Jumper	IPS-1041-2
W50	Jumper	IPS-1041-2
W51	Jumper	IPS-1041-4
W52	Jumper	IPS-1041-2
W53	Jumper	IPS-1041-2

[DISPLAY UNIT]

REF. NO.	DESCRIPTION	PART NO.
W54	Wire	23/02/470/C01/C21
W55	Wire	23/00/470/C01/C21
W56	Wire	23/09/470/C01/C21
W57	Wire	23/05/340/C01/C21
W58	Wire	23/01/370/C01/C22
W59	Wire	23/02/370/C01/C22
W60	Wire	23/03/370/C01/C22
W61	Wire	23/04/370/C01/C22
W62	Wire	23/05/370/C01/C22
W63	Wire	23/06/370/C01/C22
W64	Wire	23/07/370/C01/C22
W65	Wire	23/08/370/C01/C22
W66	Wire	23/09/370/C01/C22
W67	Wire	23/00/370/C01/C22
W68	Wire	23/01/310/C01/C22
W69	Wire	23/02/310/C01/C22
W70	Wire	23/03/310/C01/C22
W71	Wire	23/04/310/C01/C22
W72	Wire	23/06/230/C01/C21
W73	Wire	23/07/150/C01/C21
W74	Wire	23/08/230/C01/C21
W75	Wire	23/05/050/C21/C21
W76	Wire	23/06/120/C21/C21
W77	Wire	23/08/110/C21/C21
W78	Jumper	IPS-1041-2

[REG (#02~#05) UNIT]

REF. NO.	DESCRIPTION	PART NO.
Q1	Transistor	2SD880
Q2	Transistor	2SA1015 Y
Q3	Transistor	2SC945 P
D1	Diode	KBU6D
D2	Zener	RD5.1E B2
D3	Zener	RD5.1E B2
D4	Diode	U05B
L1	Coil	LW-16
R1	Resistor	10k R25
R2	Resistor	SRW5P56-J
R3	Resistor	100 R25
R4	Resistor	1.8k R25
R5	Trimmer	RHB0QN204A 330
R6	Resistor	680 R25
R7	Resistor	4.7 R25
C1	Ceramic	DE7090B102KVA1-KC 1000P
C2	Ceramic	DE7090B102KVA1-KC 1000P
C3	Ceramic	DD112B103K50V02 0.01
C4	Ceramic	DD112B103K50V02 0.01
C5	Ceramic	DD112B103K50V02 0.01
C6	Ceramic	DD112B103K50V02 0.01
C7	Electrolytic	4700 35V LPS
C8	Barrier Layer	0.1 16V
C9	Electrolytic	470 16V
C10	Ceramic	0.0047 50V
C11	Electrolytic	470 16V
C12	Barrier Layer	0.1 16V
C13	Electrolytic	100 25V
J1	Connector	CM-3
J3	Connector	RTB-1.5-4F
J4	Connector	RTB-1.5-4F
P1	Connector	3191-04R1
P2	Connector	1490-4R1
P3	Connector	1P-SMF 01T-1.3
P4	Connector	1490-4P
P5	Connector	S2P-SVF
P6	Connector	S2P-SVF
F1	Fuse	1A (#02 Only)
F1	Fuse	0.5A (#03, #04, #05 Only)
F2	Fuse	2A
F3	Holder	FH-032C
F4	Holder	S-N5051
F5	Holder	S-N5051

[REG (#02~#05) UNIT]

REF. NO.	DESCRIPTION	PART NO.
T1	Transformer	TP-45
EP1	P.C. Board	B-1002B
W1	Wire	13/06/350/A08/W02
W2	Wire	13/04/420/A08/W02
W3	Wire	13/03/420/A08/W03
W4	Wire	13/02/350/A08/B31
W5	Wire	13/02/040/A06/A06
W6	Wire	13/06/050/W02/W02
W7	Wire	13/06/090/W02/W02
W8	Wire	13/00/050/W02/W02
W9	Wire	13/02/130/A05/W03
W10	Wire	13/04/130/A05/W03
W11	Wire	13/00/130/A05/W03
W12	Jumper	IPS-1041-4
W13	Jumper	74/98/050/X98/X98
W14	Wire	13/06/040/B07/B07
W15	Wire	13/06/040/B07/B07

[DL-REG UNIT]

REF. NO.	DESCRIPTION	PART NO.
Q1	Transistor	2SD880
Q2	Transistor	2SA1015 Y
Q3	Transistor	2SC945 P
D1	Diode	KBU6D
D2	Zener	RD5.1E B2
D3	Zener	RD5.1E B2
D4	Diode	U05B
L1	Coil	LW-16
R1	Resistor	10k R25
R2	Resistor	SRW5P56-J
R3	Resistor	100 R25
R4	Resistor	1.8k R25
R5	Trimmer	RH0652CN2J04A 330
R6	Resistor	680 R25
R7	Resistor	4.7 R25
C1	Ceramic	DE1110E102MACT4K-KD
C2	Ceramic	DE1110E102MACT4K-KD
C3	Ceramic	DD112B103K50V02 0.01
C4	Ceramic	DD112B103K50V02 0.01
C5	Ceramic	DD112B103K50V02 0.01
C6	Ceramic	DD112B103K50V02 0.01
C7	Electrolytic	4700 35V LPS
C8	Barrier Layer	0.1 16V
C9	Electrolytic	470 16V
C10	Ceramic	0.0047 50V
C11	Electrolytic	470 16V
C12	Barrier Layer	0.1 16V
C13	Electrolytic	100 25V
J1	Connector	CM-3
P1	Connector	3191-04R1
P2	Connector	1P-SMF01T-1.3
P3	Connector	Spring Connector (Y)
P4	Connector	Spring Connector (Y)
P5	Connector	1625-03R1
P6	Connector	1625-03P1
F1	Fuse	0.5A (F.G.M.S)
F2	Fuse	2A
F3	Holder	FH-033
F4	Holder	S-N5051
F5	Holder	S-N5051
T1	Transformer	TP-46
EP1	P.C. Board	B-1002B

[DL-REG UNIT]

REF. NO.	DESCRIPTION	PART NO.
W1	Wire	13/01/050/A01/A01
W3	Wire	13/02/250/W02/B31
W4	Wire	13/26/140/W06/W06
W5	Wire	99/01/350/A08/W06
W6	Wire	99/01/400/A08/W07
W8	Wire	99/01/180/W06/W06
W9	Wire	13/02/200/A02/W02
W10	Wire	13/03/200/A02/W02
W11	Wire	13/00/200/A02/W02
W12	Jumper	IPS-1041-4
W13	Jumper	74/98/050/X98/X98
W14	Wire	99/06/350/A08/W06
W15	Wire	99/06/400/A08/W07

[DC-DC UNIT]

REF. NO.	DESCRIPTION	PART NO.		
Q1	Transistor	2SC2655		
Q2	Transistor	2SC2655		
Q3	Transistor	2SD468 B/C		
Q4	Transistor	2SB562 C		
Q5	Transistor	2SB562 C		
D1	Diode	1SS55		
D2	Zener	RD24E B2		
D3	Diode	1SS55		
D4	Zener	RD12E B2		
D5	Zener	RD8.2E B1		
D6	Diode	1SS55		
L1	Coil	FL9H 102J		
L2	Coil	LAL04NA 102K		
R1	Resistor	5.6k	R20	
R2	Resistor	5.6k	R20	
R3	Resistor	2.2	R20	
R6	Resistor	3.3k	ELR20	
R7	Resistor	10	CRB25FX	
R8	Resistor	15k	R20	
R9	Resistor	2.2k	ELR20	
R10	Resistor	120	ELR25	
R11	Resistor	1k	ELR25	
C1	Electrolytic	33	16V	
C2	Electrolytic	33	16V	
C3	Ceramic	0.001	50V	
C4	Ceramic	0.001	50V	
C5	Ceramic	0.0047	50V	
C6	Ceramic	0.0047	50V	
C7	Electrolytic	3.3	50V	
C8	Electrolytic	22	25V	
C9	Electrolytic	100	25V	
C10	Electrolytic	100	25V	
C11	Electrolytic	3.3	50V	
C12	Electrolytic	22	16V	
C13	Electrolytic	10	16V	
C14	Electrolytic	10	16V	
C15	Electrolytic	22	10V	
C16	Electrolytic	4.7	25V	
C17	Electrolytic	10	16V	RC2
J1	Connector	TLB-P04H-B1		
J2	Connector	TLB-P04H-B1		
P1	Connector	TL-25H-04-B1		
P2	Connector	TL-25H-04-B1		
T1	Transformer	TO-9		
EP1	P.C. Board	B-1081A		

[DC-DC UNIT]

REF. NO.	DESCRIPTION	PART NO.
W1	Jumper	IPS-1041-4
W2	Jumper	IPS-1041-4
W3	Wire	23/00/340/C01/C22
W4	Wire	23/05/340/C01/C22
W5	Wire	23/03/340/C01/C22
W6	Wire	23/02/340/C01/C22
W7	Wire	23/06/500/C01/C22
W8	Wire	23/05/500/C01/C22
W9	Wire	23/03/500/C01/C22
W10	Wire	23/04/500/C01/C22
W11	Jumper	IPS-1041-2

[EF UNIT]

REF. NO.	DESCRIPTION	PART NO.
L1	Coil	LW-19
C1	Ceramic	0.0047 50V
C2	Barrier Layer	0.1 16V
J1	Connector	SQ-2054
J2	Connector	NR-DSE-02
J3	Connector	AT-700
J4	Connector	HSJ0780-01-010
J5	Connector	HSJ0780-01-010
J6	Connector	HSJ0780-01-010
J7	Connector	AT-700
P1	Connector	TMP-P01X-A1
P2	Connector	5250-03
P3	Connector	TL-25H-06-B1
P4	Connector	TL-25H-03-B1
P5	Connector	TL-25H-04-B1
P6	Connector	TL-25H-03-B1
P7	Connector	TL-25H-03-B1
P8	Connector	TL-25H-03-B1
P9	Connector	TMP-P01X-A1
P10	Connector	001T410
S1	Switch	SSSY02041A (FM(1)-FM(2) SELECTOR)
S2	Switch	SPPH15009A (USB/LSB SELECTOR)
S3	Switch	SPPH15009A (RECORDER-SPEECH)
SP1	Speaker	C090K10I0851
EP1	P.C. Board	B-1096B
W1	Jumper	IPS-1041-2
W2	Jumper	IPS-1041-4
W3	Jumper	IPS-1041-4
W4	Jumper	IPS-1041-2

[KEYBOARD UNIT]

REF. NO.	DESCRIPTION	PART NO.
IC1	IC	μPC1373H
Q1	Transistor	2SC3399
D1	Diode	1SS133
D2	Diode	1SS133
D3	Diode	1SS133
D4	Diode	1SS133
D5	Diode	1SS133
D6	Diode	1SS133
D7	Diode	1SS133
D8	Diode	1SS133
D9	Diode	1SS133
D10	Diode	1SS133
D11	Diode	1SS133
D12	Diode	1SS133
D13	Diode	1SS133
D14	Diode	1SS133
D15	Diode	1SS133
D16	Diode	1SS133
D17	Diode	1SS133
D18	Diode	1SS133
D19	Diode	1SS133
D20	Diode	1SS133
D21	Diode	1SS133
D22	Diode	1SS133
D23	Diode	1SS133
D24	Diode	1SS133
D25	Diode	1SS133
D26	Diode	1SS133
D27	Diode	1SS133
D28	Photo	PH302B
D29	Zener	RD11E B1
L1	Coil	FL7H 472
R1	Resistor	1k ELR20
R2	Resistor	5.6 ELR20
R3	Resistor	100k ELR20
R4	Resistor	100k ELR20
R5	Resistor	100 R25
R6	Resistor	470 R20
R7	Resistor	2.7k R25
C1	Electrolytic	10 16V RC2
C2	Electrolytic	10 16V RC2
C3	Electrolytic	4.7 25V RC2
C4	Electrolytic	10 16V RC2
C5	Ceramic	0.0047 50V
C6	Barrier Layer	0.1 16V
C7	Ceramic	0.0047 50V
P1	Connector	TL-25H-10-B1
DS1	LED	LN233RP

[KEYBOARD UNIT]

REF. NO.	DESCRIPTION	PART NO.
S1	Switch	HKW0269-01-200 (1)
S2	Switch	HKW0269-01-200 (2)
S3	Switch	HKW0269-01-200 (3)
S4	Switch	HKW0269-01-200 (4)
S5	Switch	HKW0269-01-200 (5)
S6	Switch	HKW0269-01-200 (6)
S7	Switch	HKW0269-01-200 (7)
S8	Switch	HKW0269-01-200 (8)
S9	Switch	HKW0269-01-200 (9)
S10	Switch	HKW0269-01-200 (0)
S11	Switch	HKW0269-01-200 (•)
S12	Switch	HKW0269-01-200 (ENT)
S13	Switch	HKW0269-01-200 (AM)
S14	Switch	HKW0269-01-200 (FM)
S15	Switch	HKW0269-01-200 (FMn)
S16	Switch	HKW0269-01-200 (SSB)
EP1	P.C. Board	B-997B
W1	Wire	23/01/180/C01/W02
W2	Wire	23/02/180/C01/W02
W3	Wire	23/03/180/C01/W02
W4	Wire	23/04/180/C01/W02
W5	Wire	23/05/180/C01/W02
W6	Wire	23/06/180/C01/W02
W7	Wire	23/07/180/C01/W02
W8	Wire	23/09/180/C01/W02
W9	Wire	23/08/180/C01/W02
W10	Wire	23/00/180/C01/W02
W11	Jumper	JPW-02A
W12	Jumper	IPS-1041-2
W13	Jumper	IPS-1041-2

[G PARTS]

REF. NO.	DESCRIPTION	PART NO.
W1	Wire	68/99/160/C31/W99
W2		08 99
W3	Wire	23/00/180/A12/W02
W4	Wire	23/04/180/A12/W02
W5	Wire	23/01/330/C01/W02
W6	Wire	23/02/330/C01/W02
W7	Wire	23/03/330/C01/W02
W8	Wire	23/04/330/C01/W02
W9	Wire	23/05/330/C01/W02
W10	Wire	23/06/330/C01/W02
W11	Wire	23/07/330/C01/W02
W12	Wire	23/08/330/C01/W02
W13	Wire	23/03/270/C01/W02
W14	Wire	23/00/270/C01/W02
W15	Wire	23/04/270/C01/W02
W16	Wire	23/06/190/C01/W02
W17	Wire	23/00/190/C01/W02
W18	Wire	51/04/170/C01A/W11A
W19		08 A A
W20	Wire	23/08/240/C01/W02
W21	Wire	23/09/240/C01/W02
W22	Wire	61/99/410/C31/W11A
W23		08 A
W24	Wire	23/07/260/C32G/W02

9-1 IC-R7000

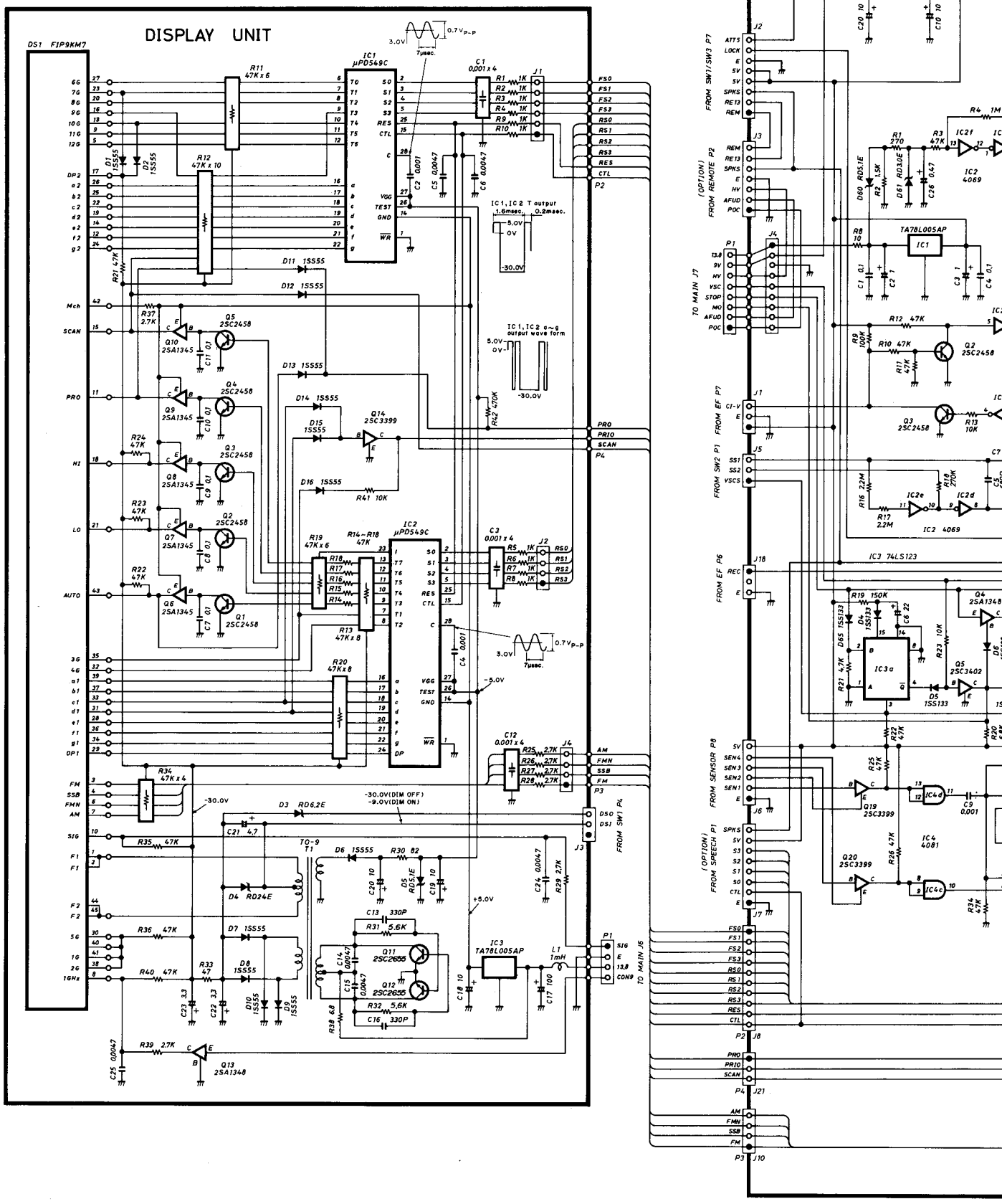
DISPLAY UNIT
DS1 FIP9KM7
IC1 μPD549C
IC2 μPD549C
IC3 TA78L005AP
IC1 TA78L00SAP
IC2 4069
IC3 74LS123
IC4 4081
IC1, IC2 T output
1.6msec.
0.2msec.
5.0V
0V
-30.0V
IC1, IC2 a~g output wave form
0.7Vp-p
3.0V
7μsec.
-5.0V
-30.0V(DIM OFF)
-9.0V(DIM ON)
+8.0V
TO-9
TO MAIN J7
TO MAIN J6
FROM SW1/SW3 P7
FROM REMOTE P2
FROM EF P7
FROM SW2 P1
FROM EF P6
FROM SENSOR P8
FROM SPEECH P1
FROM SW1 P4
(OPTION)
L1 1mH
P1
P2
P3
P4
J1
J2
J3
J4
J5
J6
J7
J8
J10
J21

LOGIC UNIT

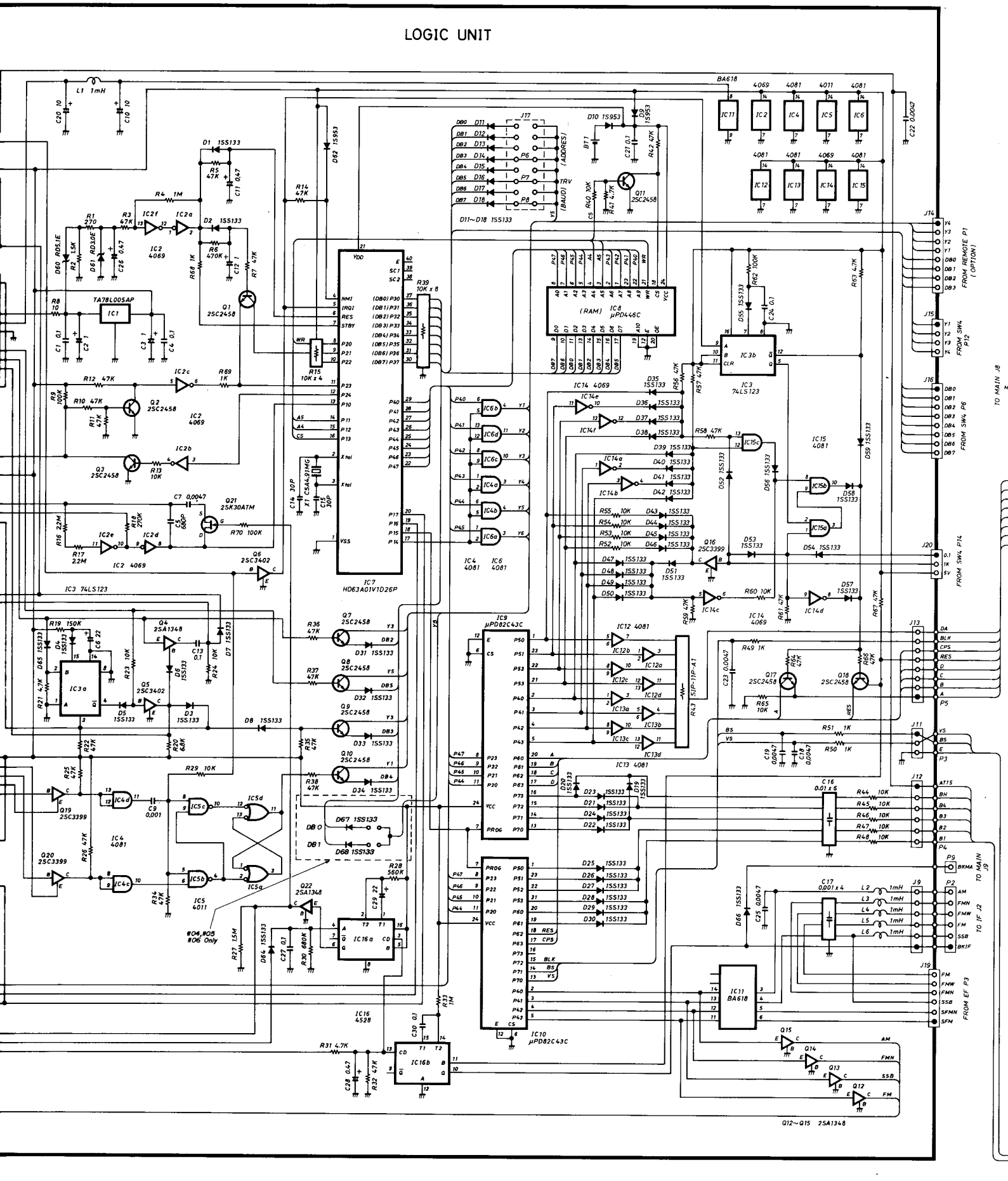

IC7 HD63A01V1D26P
IC8 μPD446C
IC9 μPD82C43C
IC10 μPD82C43C
IC11 BA618
IC16 4528
IC3 74LS123
IC1 TA78L005AP
IC2 4069
IC4 4081
IC5 4011
IC6 4081
IC12 4081
IC13 4081
IC14 4069
IC15 4081
IC3a
IC3b
IC4a
IC4b
IC4c
IC4d
IC5a
IC5b
IC5c
IC5d
IC6a
IC6b
IC6c
IC6d
IC6e
IC6f
IC6g
IC6h
IC12a
IC12b
IC12c
IC12d
IC13a
IC13b
IC13c
IC13d
IC14a
IC14b
IC14c
IC14d
IC14e
IC14f
IC15a
IC15b
IC15c
IC16a
IC16b
IC2a
IC2b
IC2c
IC2d
IC2e
IC2f
Q1 2SC2458
Q2 2SC2458
Q3 2SC2458
Q4 2SA1348
Q5 2SC3402
Q6 2SC3402
Q7 2SC2458
Q8 2SC2458
Q9 2SC2458
Q10 2SC2458
Q11 2SC2458
Q12~Q15 2SA1348
Q16 2SC3399
Q17 2SC2458
Q18 2SC2458
Q19 2SC3399
Q20 2SC3399
Q21 2SK30ATM
Q22 2SA1348
D11~D18 1SS133
D67 1SS133
D68 1SS133
#04,#05 #06 Only
FROM REMOTE P1 (OPTION)
FROM SW4 P12
FROM SW4 P6
FROM SW4 P14
TO MAIN J8
TO MAIN J9
TO IF J2
FROM EF P3

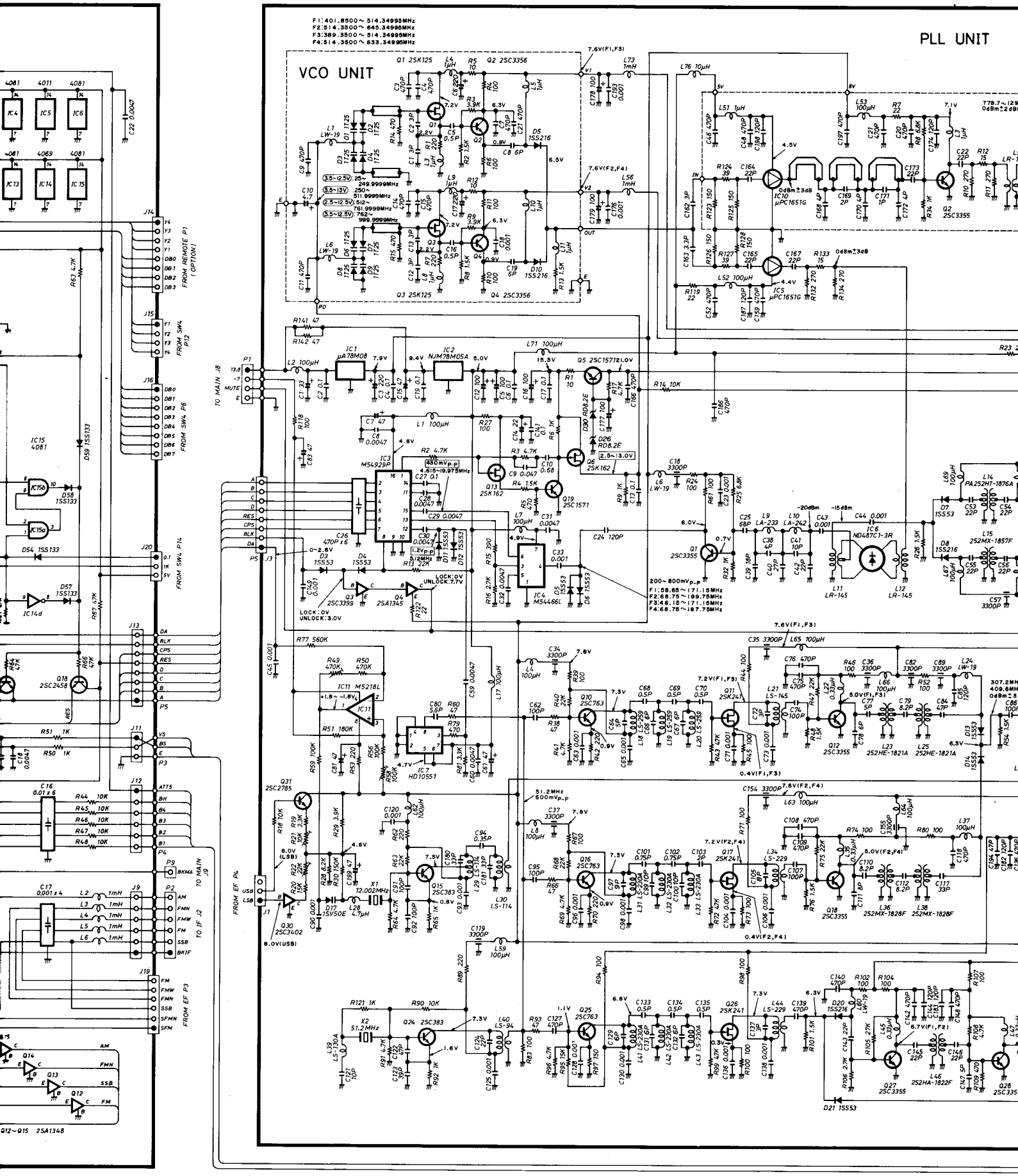

PLL UNIT
VCO UNIT
F1:401.8500~514.34995MHz
F2:514.3500~645.34995MHz
F3:389.3500~514.34995MHz
F4:514.3500~633.34995MHz
FROM REMOTE P1 (OPTION)
FROM SW4 P12
FROM SW4 P6
FROM SW4 P14
TO MAIN J8
TO MAIN J9
TO IF J2
FROM EF P3
FROM EF P4
Q12~Q15 2SA1348
IC1 μA78M08
IC2 NJM78M05A
IC3 M54929P
IC4 M54466L
IC5 μPC1651G
IC6 ND487C1-3R
IC7 HD10551
IC11 M5218L
200~800mVp-p
F1:58.65~171.15MHz
F2:68.75~199.75MHz
F3:46.15~171.15MHz
F4:68.75~187.75MHz

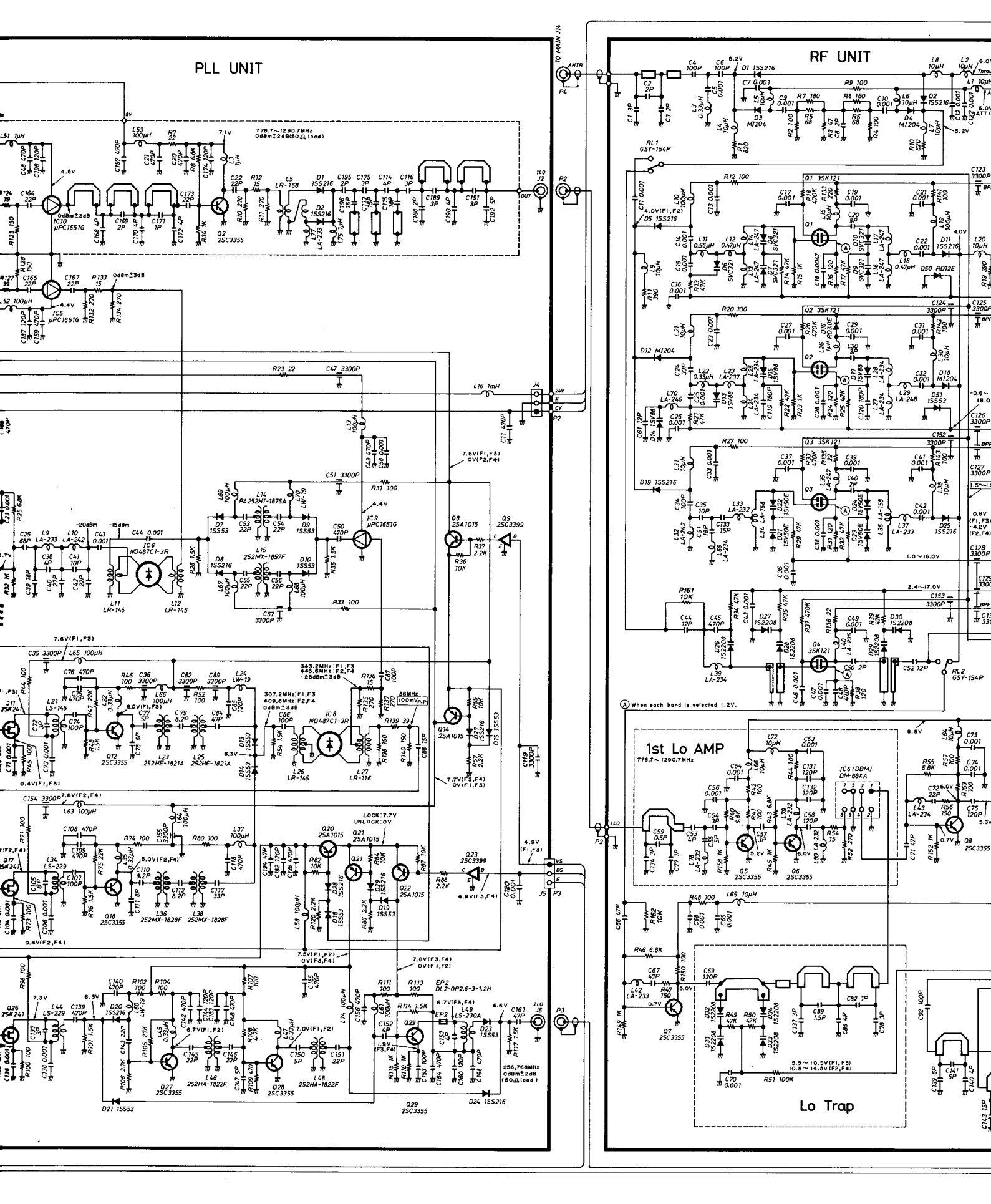
PLL UNIT
RF UNIT
1st Lo AMP
Lo Trap
TO MAIN J14
ANTR
778.7~1290.7MHz
0dBm±2dB(50Ω load)
256,768MHz
0dBm±2dB
(50Ω load)
When each band is selected 1.2V.

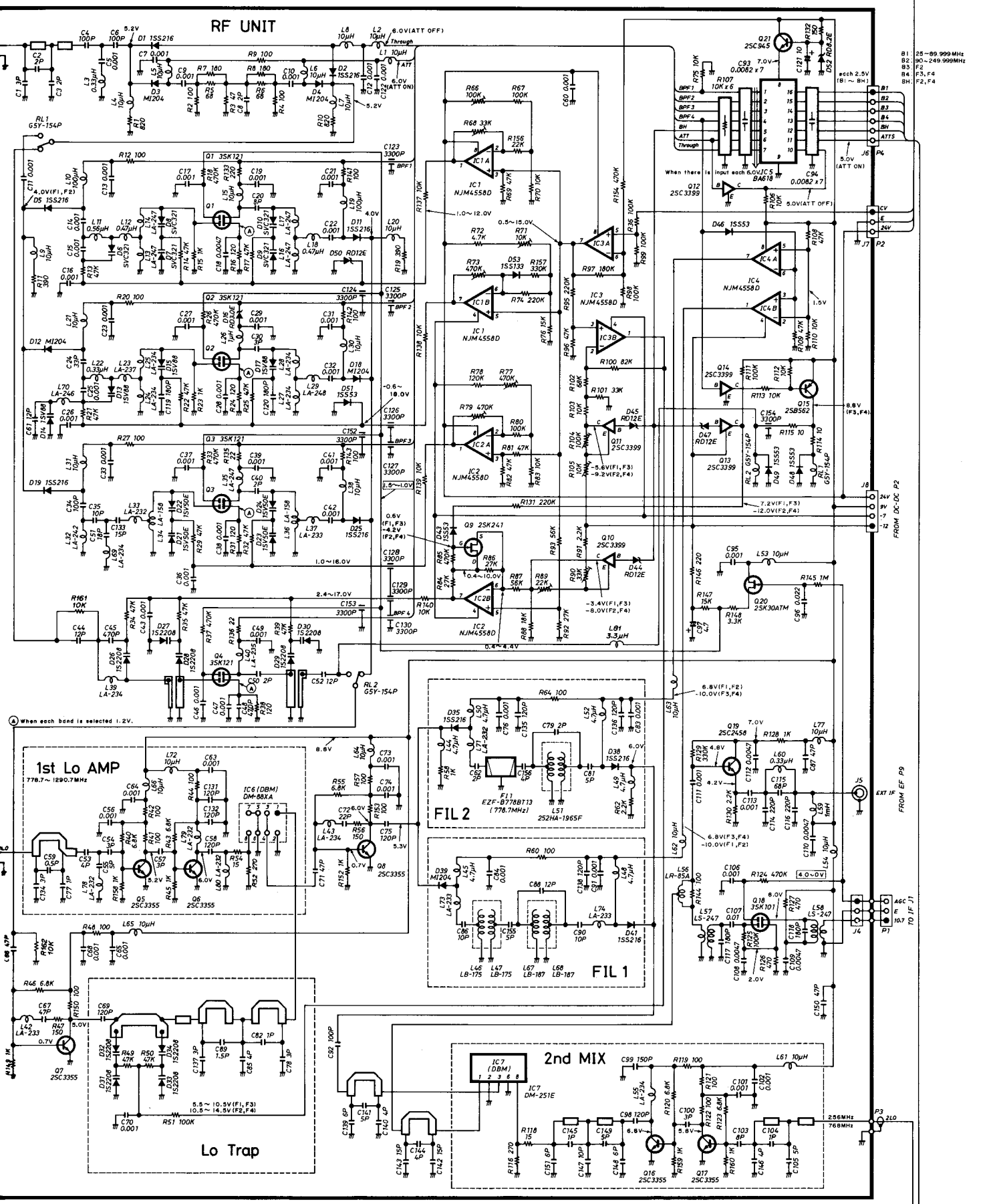
RF UNIT
1st Lo AMP
776.7~1290.7MHz
Lo Trap
2nd MIX
FIL 2
FIL 1
When each band is selected 1.2V.
B1 : 25~89.999MHz
B2 : 90~249.999MHz
B3 : F2
B4 : F3, F4
BH : F2, F4
FROM DC-DC P2
FROM EF P9
EXT IF
TO IF J1
AGC
256MHz
768MHz
2LO

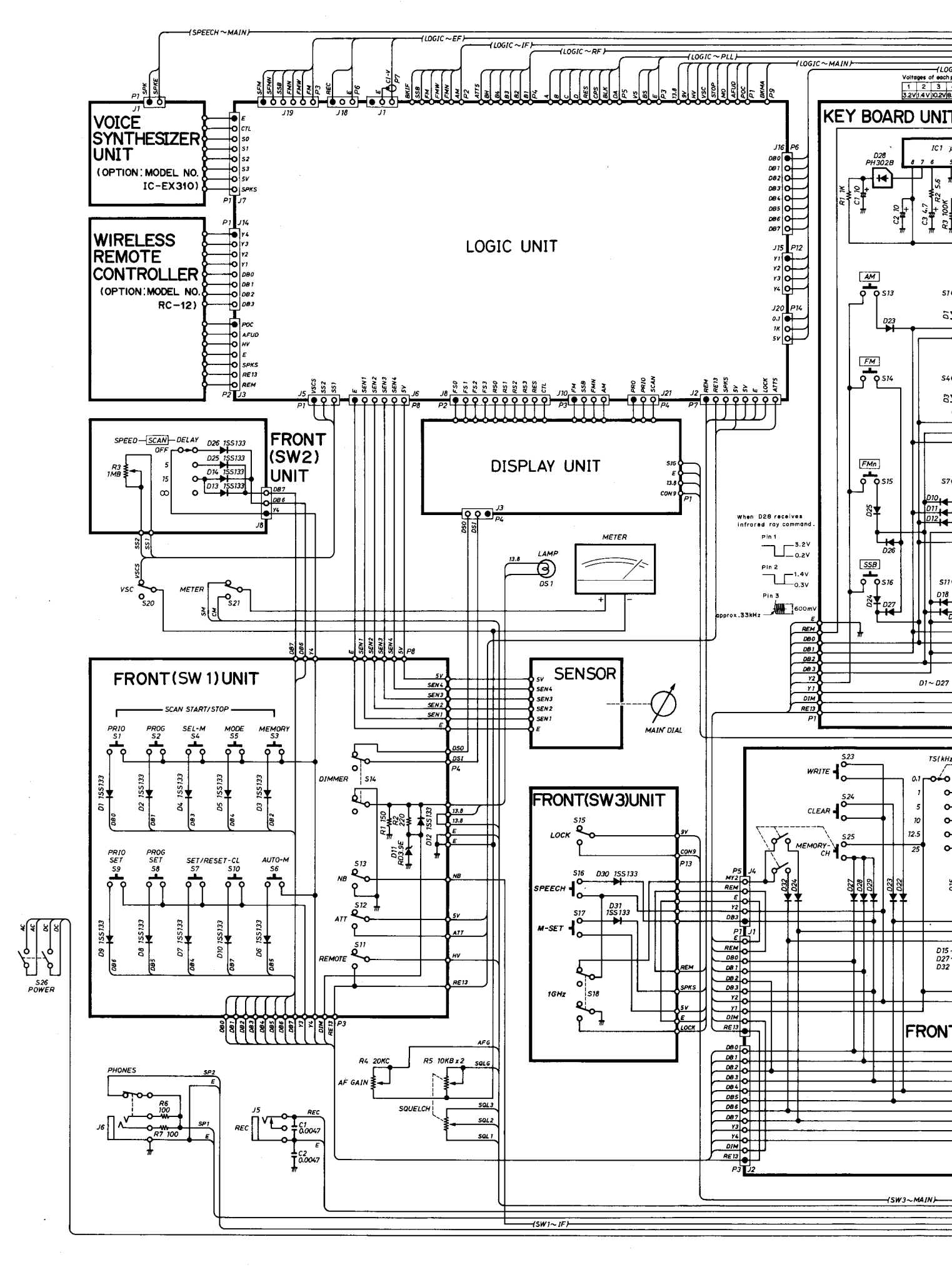
VOICE SYNTHESIZER UNIT
(OPTION: MODEL NO. IC-EX310)
WIRELESS REMOTE CONTROLLER
(OPTION: MODEL NO. RC-12)
LOGIC UNIT
KEY BOARD UNIT
DISPLAY UNIT
FRONT (SW2) UNIT
FRONT (SW 1) UNIT
FRONT(SW3)UNIT
SENSOR
METER
LAMP
MAIN DIAL
POWER
SPEECH ~ MAIN
LOGIC ~ EF
LOGIC ~ IF
LOGIC ~ RF
LOGIC ~ PLL
LOGIC ~ MAIN
SW3 ~ MAIN
SW1 ~ IF

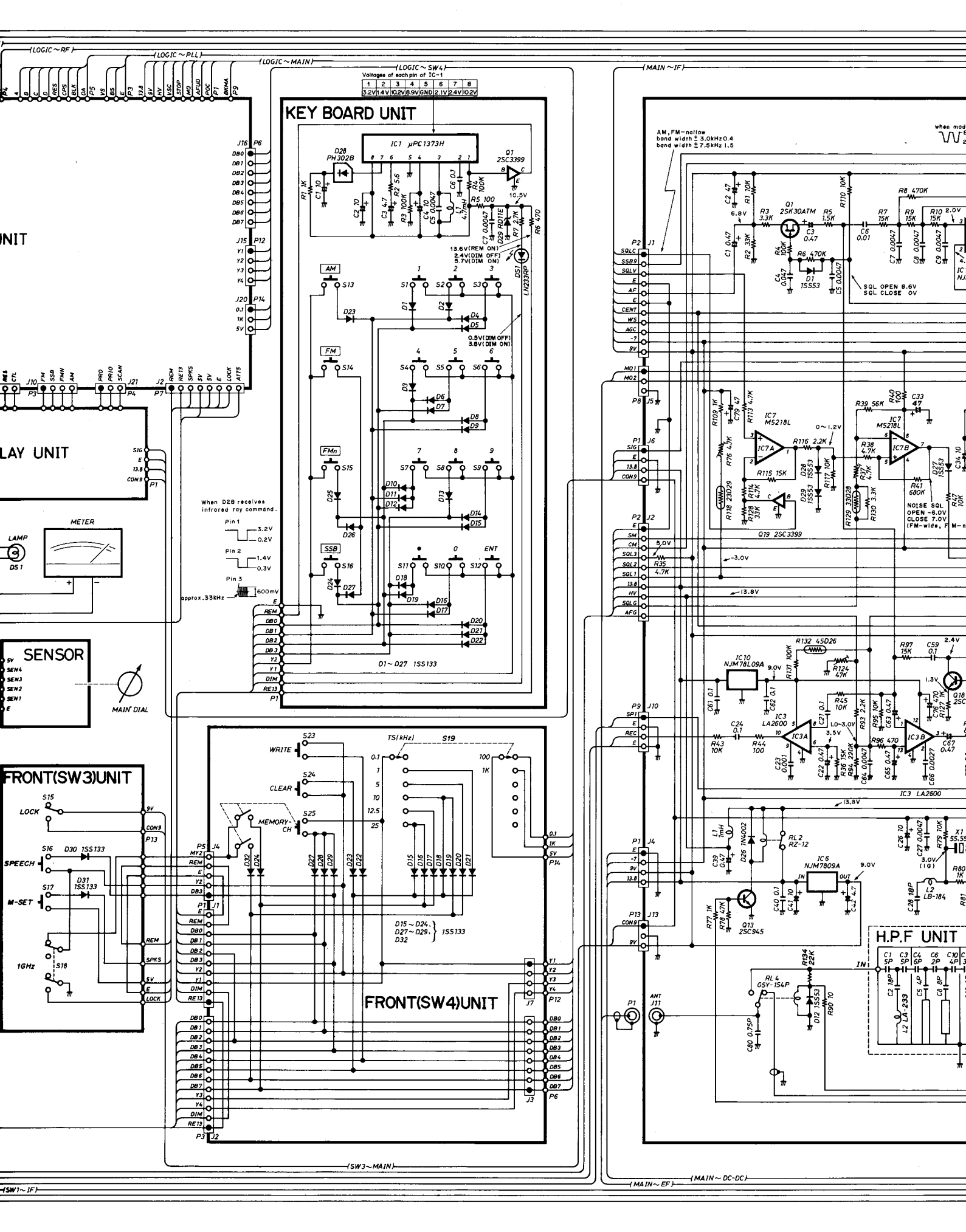
(LOGIC~RF)
(LOGIC~PLL)
(LOGIC~MAIN)
(LOGIC~SW4)
(MAIN~IF)
KEY BOARD UNIT
Voltages of each pin of IC-1
1 2 3 4 5 6 7 8
3.2V 1.4V 10.2V 6.9V GND 2.1V 2.4V 10.2V
IC1 μPC1373H
D28 PH302B
Q1 2SC3399
D29 RD11E
DS1 LN223RP
13.6V(REM ON)
2.4V(DIM OFF)
5.7V(DIM ON)
0.5V(DIM OFF)
3.8V(DIM ON)
AM
FM
FMn
SSB
ENT
When D28 receives infrared ray command.
Pin 1
3.2V
0.2V
Pin 2
1.4V
0.3V
Pin 3
600mV
approx.33kHz
D1~D27 1SS133
METER
LAMP
DS1
SENSOR
MAIN DIAL
FRONT(SW3)UNIT
LOCK
SPEECH
M-SET
1GHz
D30 1SS133
D31 1SS133
FRONT(SW4)UNIT
WRITE
CLEAR
MEMORY-CH
TS(kHz)
D15~D24, D27~D29, D32 1SS133
(SW3~MAIN)
(SW1~IF)
(MAIN~EF)
(MAIN~DC-DC)
AM, FM-narrow
band width ±3.0kHz 0.4
band width ±7.5kHz 1.5
SQL OPEN 8.6V
SQL CLOSE 0V
Q19 2SC3399
IC7 M5218L
IC10 NJM78L09A
IC3 LA2600
IC6 NJM7809A
Q13 2SC945
RL2 RZ-12
RL4 G5Y-154P
NOISE SQL
OPEN -6.0V
CLOSE 7.0V
(FM-wide, FM-n
H.P.F UNIT
ANT J11
IC3 LA2600

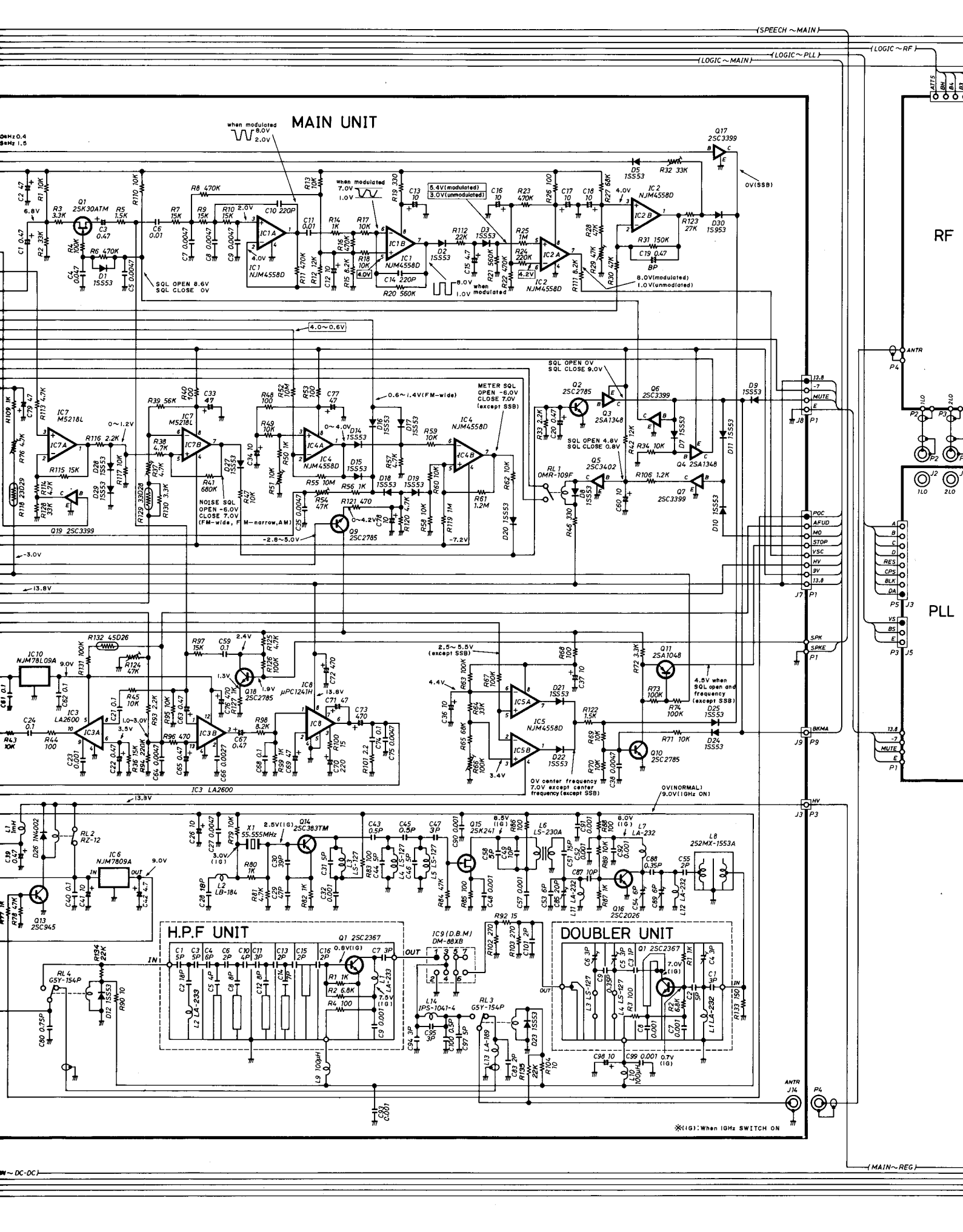

MAIN UNIT
RF
PLL
H.P.F UNIT
DOUBLER UNIT
(SPEECH ~ MAIN)
(LOGIC ~ RF)
(LOGIC ~ PLL)
(LOGIC ~ MAIN)
(MAIN ~ REG)
when modulated
SQL OPEN 8.6V
SQL CLOSE 0V
METER SQL OPEN -6.0V CLOSE 7.0V (except SSB)
NOISE SQL OPEN -6.0V CLOSE 7.0V (FM-wide, FM-narrow, AM)
SQL OPEN 0V
SQL CLOSE 9.0V
SQL OPEN 4.8V
SQL CLOSE 0.8V
4.5V when SQL open and frequency (except SSB)
0V center frequency 7.0V except center frequency (except SSB)
0V(NORMAL) 9.0V(1GHz ON)
※(1G): When 1GHz SWITCH ON

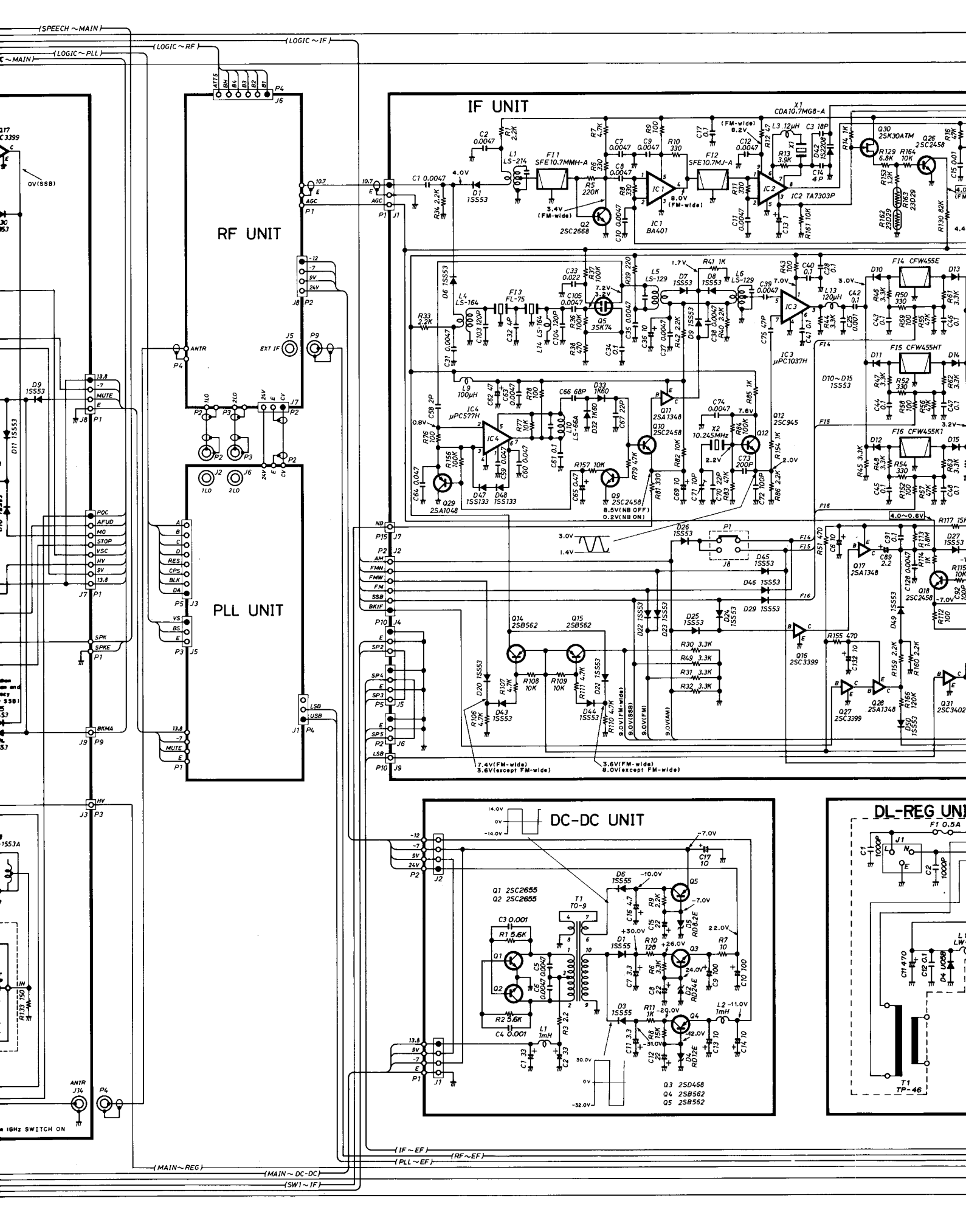
IF UNIT
RF UNIT
PLL UNIT
DC-DC UNIT
DL-REG UNIT
(SPEECH ~ MAIN)
(LOGIC ~ IF)
(LOGIC ~ RF)
(LOGIC ~ PLL)
(MAIN ~ REG)
(MAIN ~ DC-DC)
(SW1 ~ IF)
(IF ~ EF)
(PLL ~ EF)
(RF ~ EF)
IC1 BA401
IC2 TA7303P
IC3 μPC1037H
IC4 μPC577H
Q1 2SC2655
Q2 2SC2655
Q3 2SD468
Q4 2SB562
Q5 2SB562
7.4V(FM-wide)
3.6V(except FM-wide)
3.6V(FM-wide)
8.0V(except FM-wide)
8.5V(NB OFF)
0.2V(NB ON)

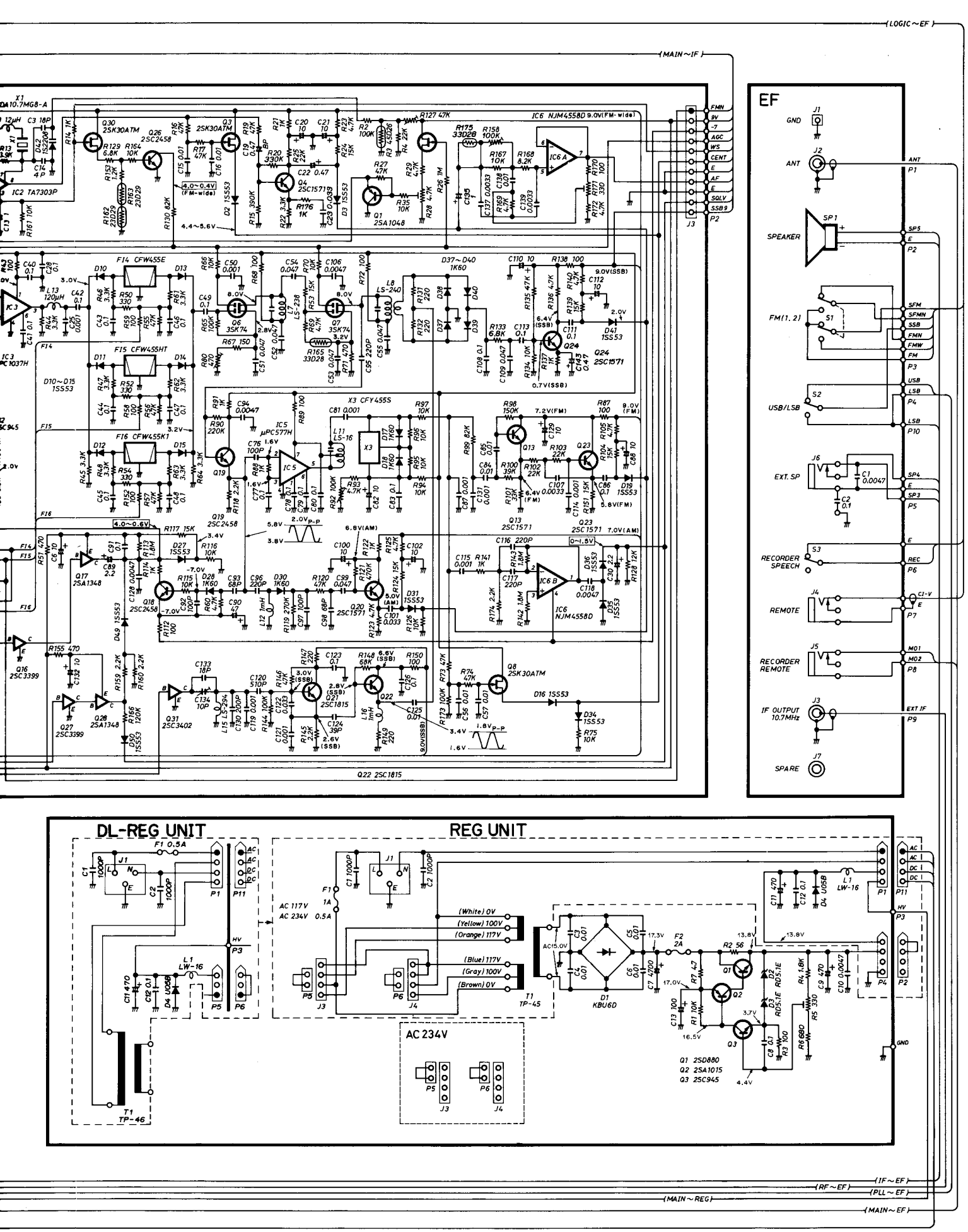
(LOGIC~EF)
(MAIN~IF)
EF
GND
ANT
SPEAKER
FM(1, 2)
USB/LSB
EXT. SP
RECORDER SPEECH
REMOTE
RECORDER REMOTE
IF OUTPUT 10.7MHz
SPARE
IC6 NJM4558D 9.0V(FM-wide)
IC2 TA7303P
IC3 PC1037H
IC5 μPC577H
IC6 NJM4558D
F14 CFW455E
F15 CFW455HT
F16 CFW455K1
X3 CFY455S
Q22 2SC1815
(MAIN~REG)
(IF~EF)
(RF~EF)
(PLL~EF)

DL-REG UNIT
REG UNIT
AC 234V
T1 TP-46
T1 TP-45
Q1 2SD880
Q2 2SA1015
Q3 2SC945

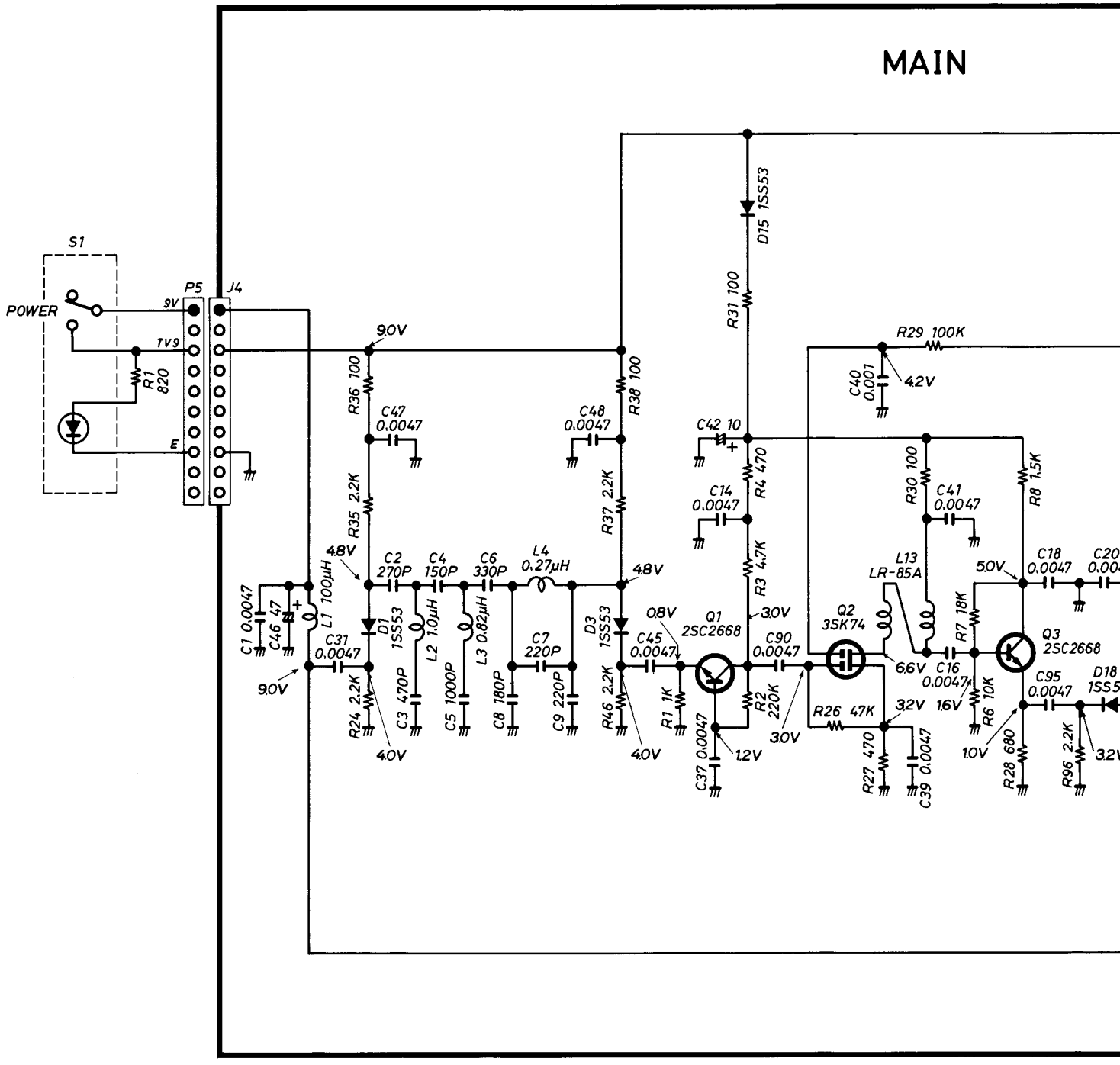
MAIN
S1
POWER
P5
J4
9V
TV9
E
R1 820
9.0V
R36 100
C47 0.0047
R35 2.2K
4.8V
C1 0.0047
C46 47
L1 100μH
C31 0.0047
9.0V
C2 270P
C4 150P
C6 330P
L4 0.27μH
D1 1SS53
L2 1.0μH
L3 0.82μH
C3 470P
C5 1000P
C8 180P
C7 220P
C9 220P
R24 2.2K
4.0V
C48 0.0047
R38 100
R37 2.2K
4.8V
D3 1SS53
R46 2.2K
4.0V
D15 1SS53
R31 100
C42 10
R4 470
C14 0.0047
R3 4.7K
0.8V
Q1 2SC2668
C45 0.0047
R1 1K
C37 0.0047
1.2V
C90 0.0047
R2 220K
3.0V
3.0V
R29 100K
C40 0.001
4.2V
R30 100
C41 0.0047
R8 1.5K
L13 LR-85A
Q2 3SK74
6.6V
R26 47K
3.2V
R27 470
C39 0.0047
C18 0.0047
5.0V
R7 18K
C16 0.0047
1.6V
R6 10K
1.0V
Q3 2SC2668
C95 0.0047
R28 680
R96 2.2K
D18 1SS5
3.2V

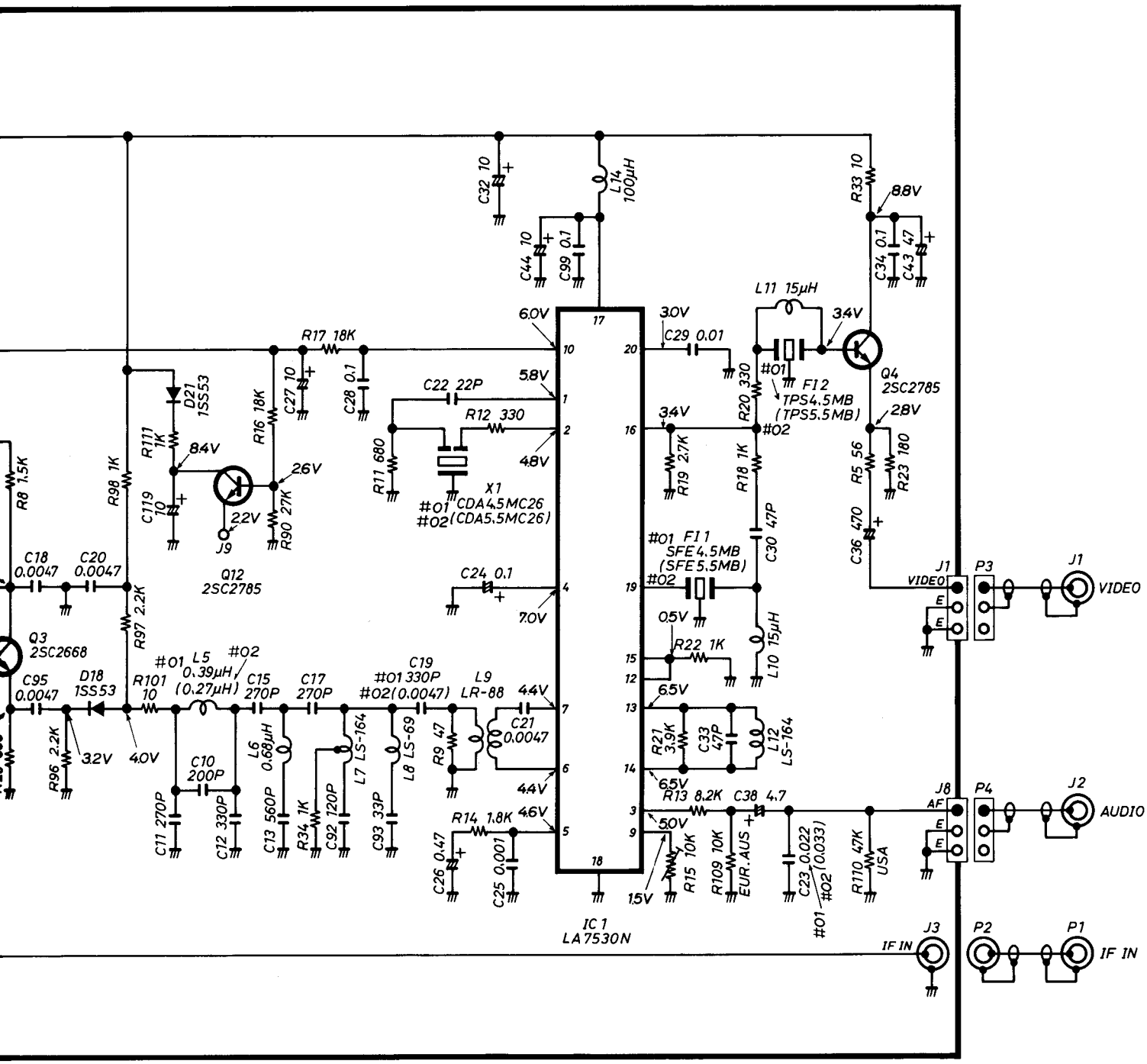

CODE NO.	VERSION	VIDEO CARRIER INPUT FREQUENCY	AUDIO INTERMEDIATE FREQUENCY
#01	U.S.A.	15.2 MHz	4.5 MHz
#02	EUROPE AND AUSTRALIA	16.2 MHz	5.5 MHz

9-3 RC-12 (OPTION)

• TRANSMITTER UNIT

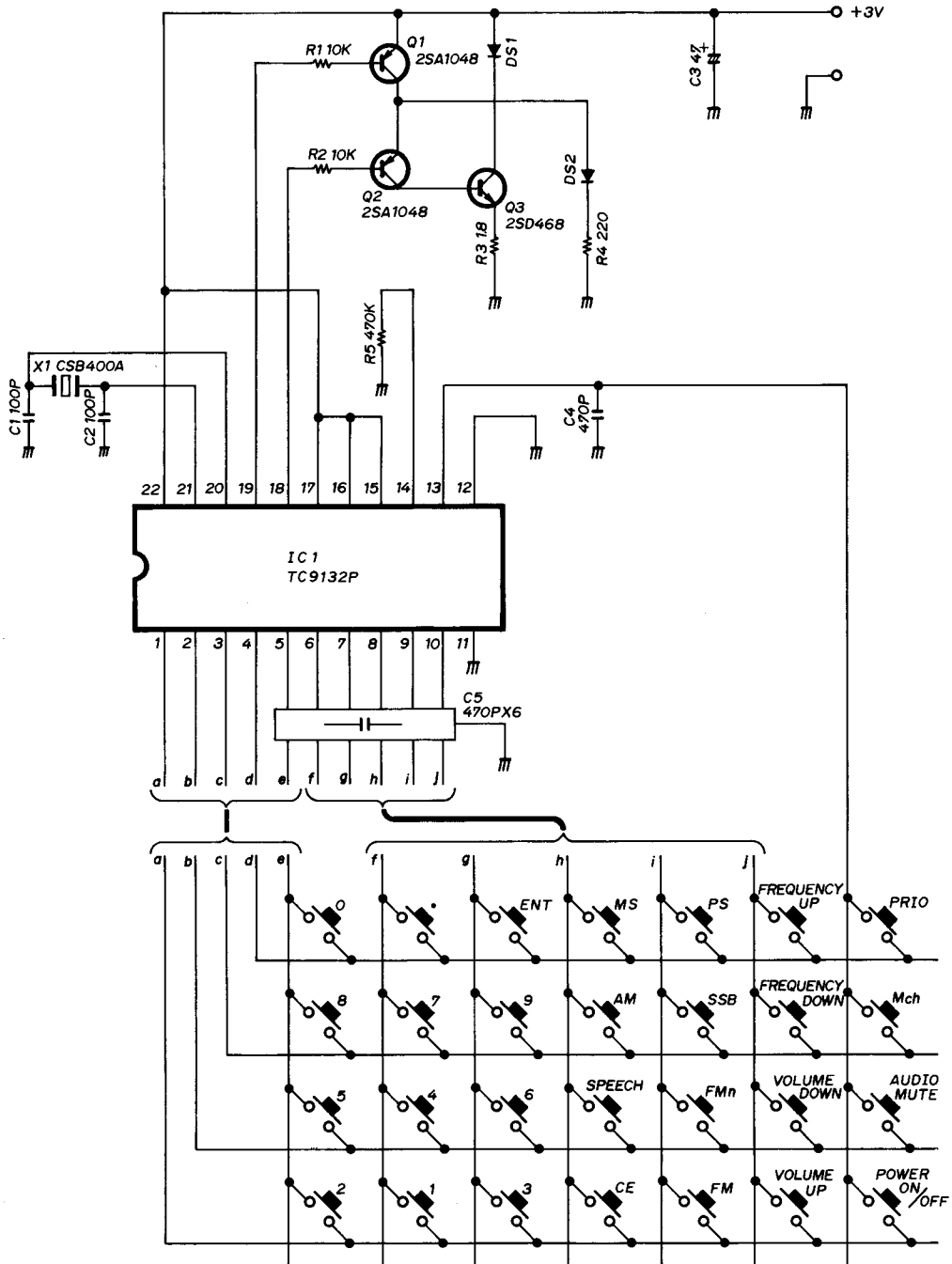

• CONTROLLER UNIT

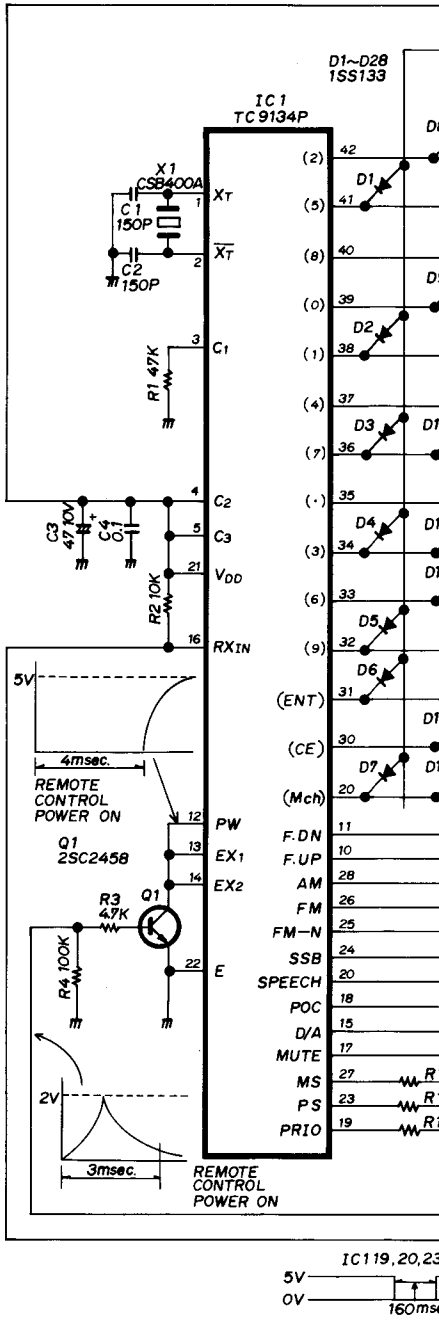

T

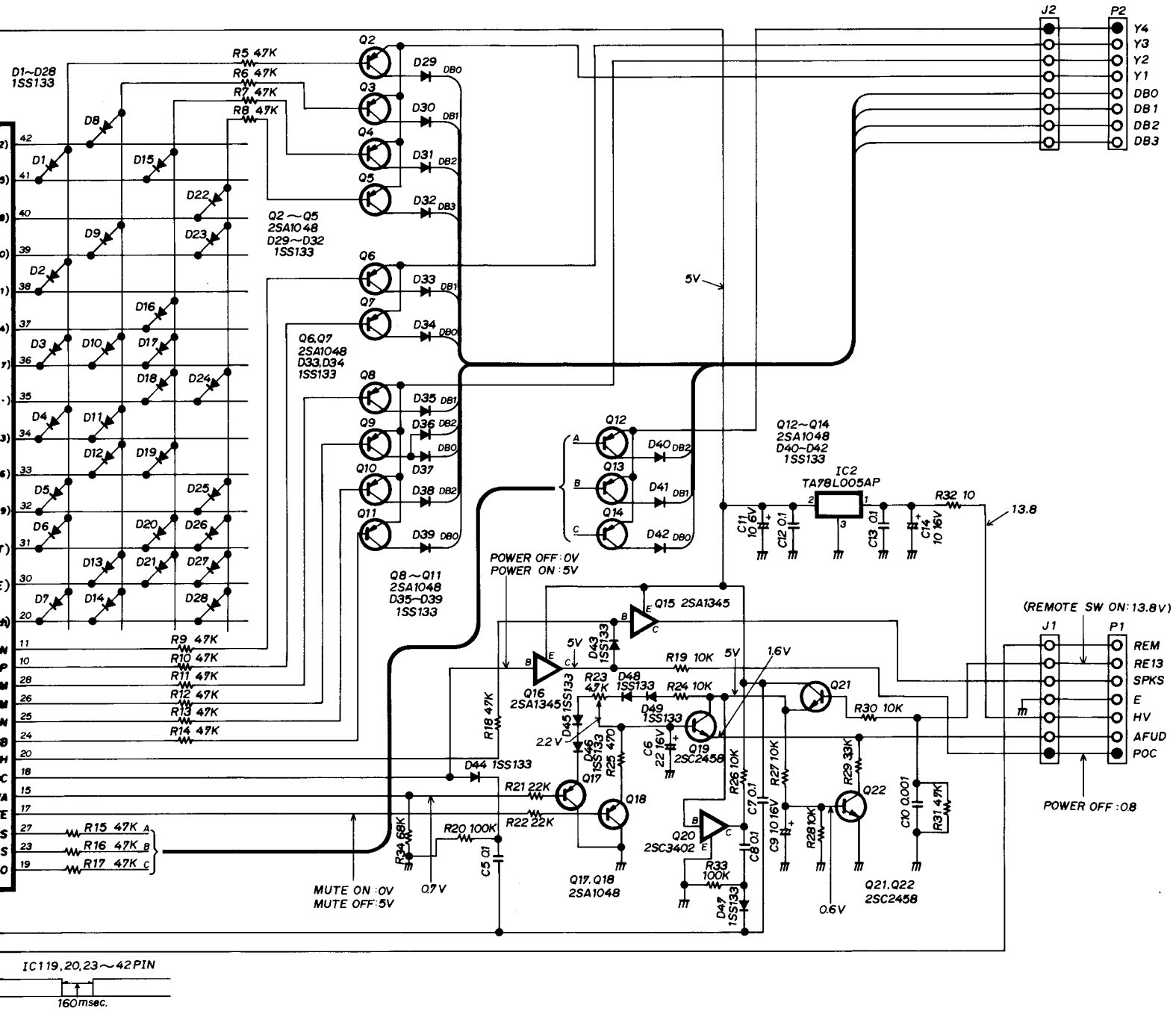

D1~D28
1SS133
R5 47K
R6 47K
R7 47K
R8 47K
Q2~Q5
2SA1048
D29~D32
1SS133
Q6,Q7
2SA1048
D33,D34
1SS133
Q8~Q11
2SA1048
D35~D39
1SS133
R9 47K
R10 47K
R11 47K
R12 47K
R13 47K
R14 47K
R15 47K
R16 47K
R17 47K
Q12~Q14
2SA1048
D40~D42
1SS133
IC2
TA78L005AP
R32 10
13.8
5V
POWER OFF:0V
POWER ON:5V
Q15 2SA1345
Q16
2SA1345
Q17,Q18
2SA1048
Q19
2SC2458
Q20
2SC3402
Q21,Q22
2SC2458
R19 10K
R24 10K
R30 10K
R18 47K
R21 22K
R22 22K
R20 100K
R34 68K
R25 470
R26 10K
R27 10K
R28 10K
R29 33K
R33 100K
R31 47K
C5 0.1
C6 22 16V
C7 0.1
C8 0.1
C9 10 16V
C10 0.001
C11 10 6V
C12 0.1
C13 0.1
C14 10 16V
D43 1SS133
D44 1SS133
D45 1SS133
D46 1SS133
D47 1SS133
D48 1SS133
D49 1SS133
2.2V
1.6V
0.7V
0.6V
MUTE ON:0V
MUTE OFF:5V
J2
P2
Y4
Y3
Y2
Y1
DB0
DB1
DB2
DB3
(REMOTE SW ON:13.8V)
J1
P1
REM
RE13
SPKS
E
HV
AFUD
POC
POWER OFF:0.8
IC119,20,23~42PIN
160msec.

IC-R7000 SCHEM

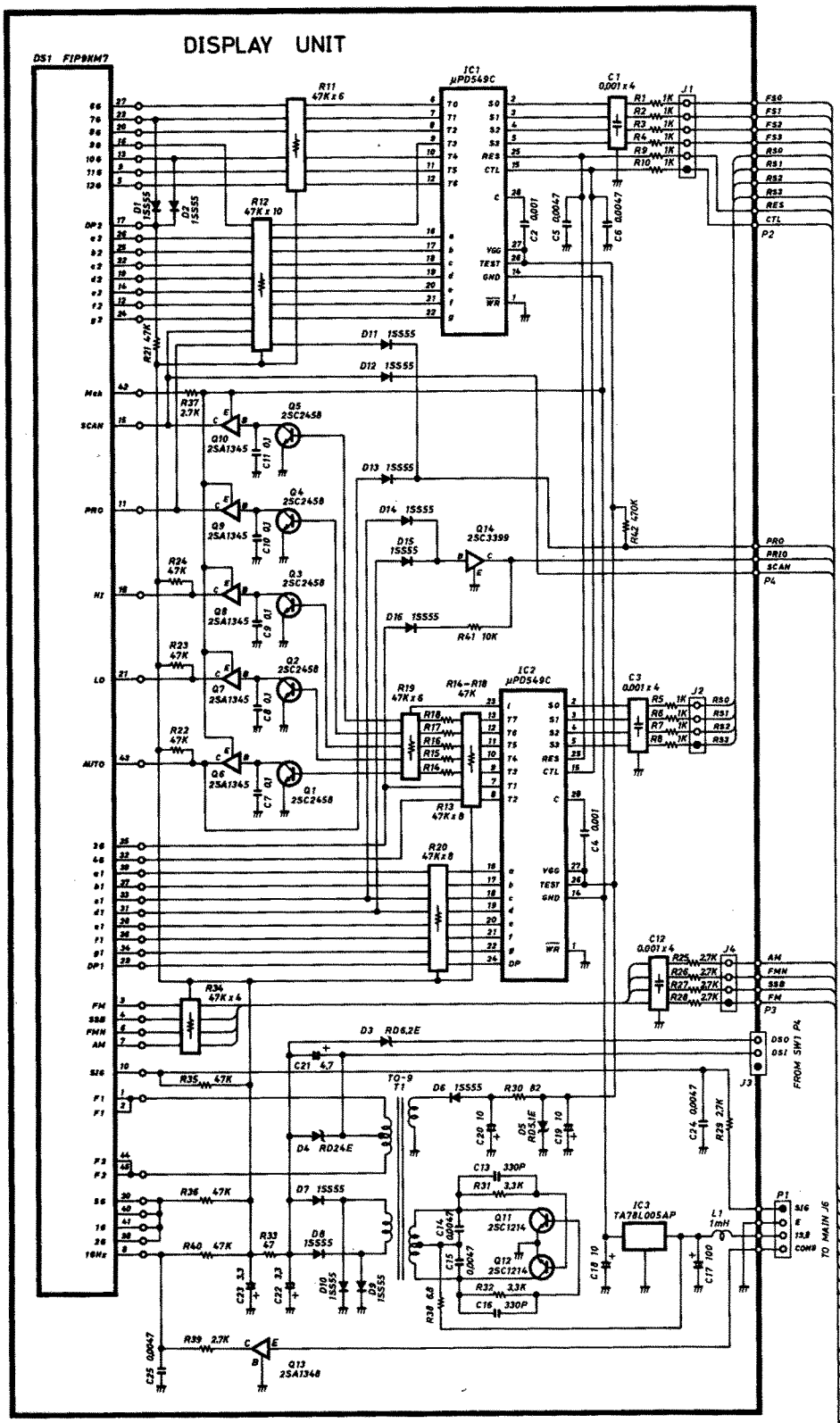

HEMATIC DIAGRAM

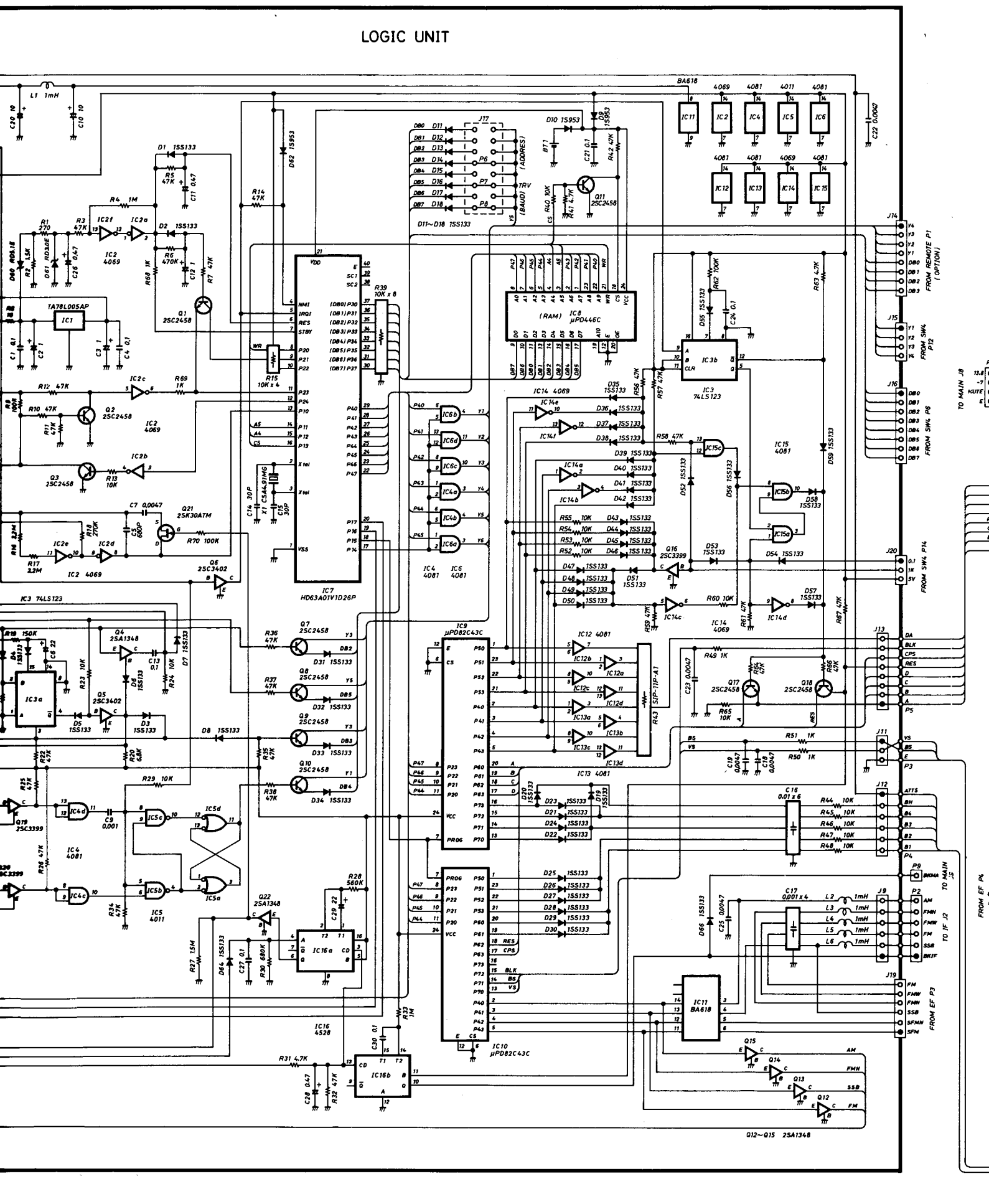

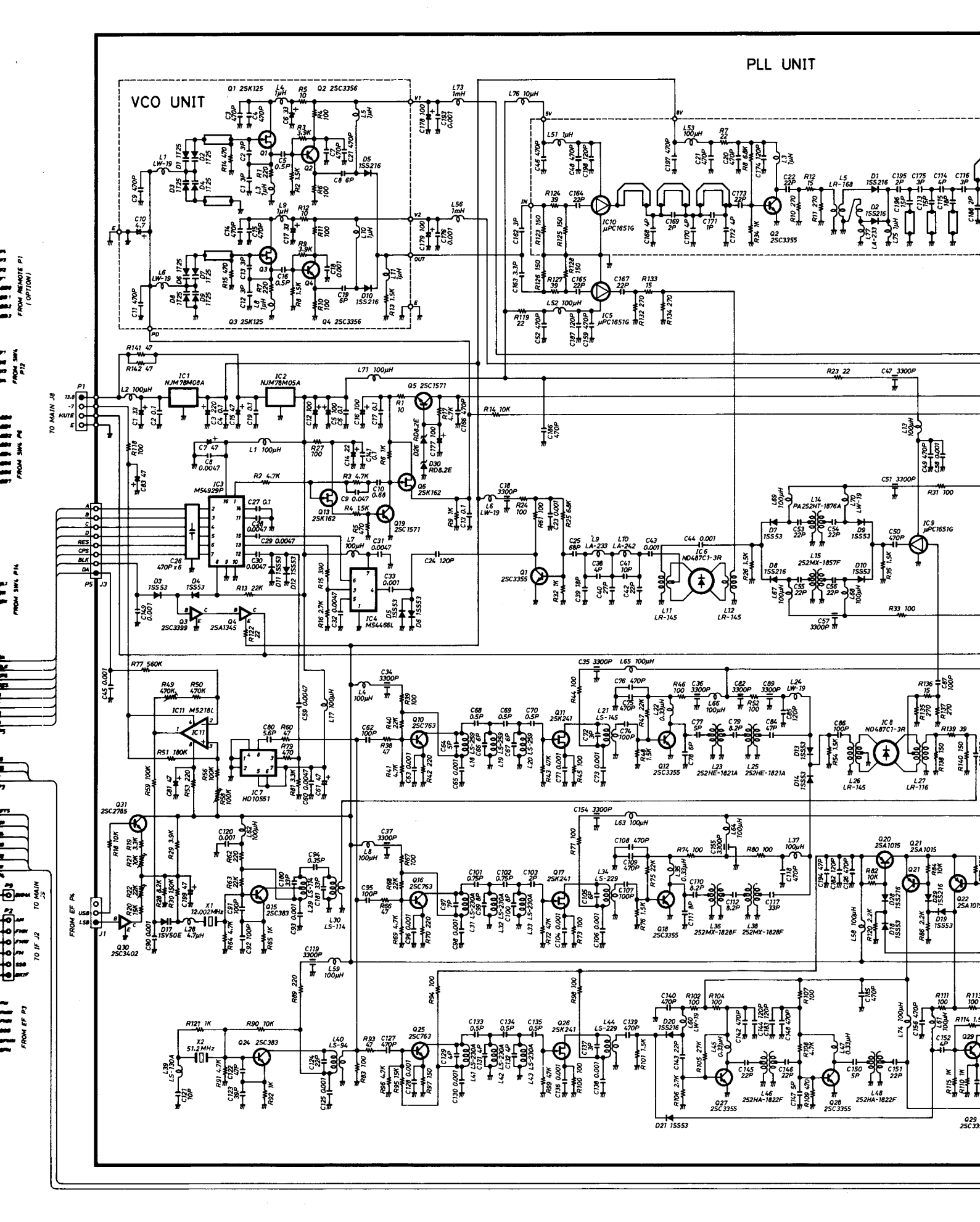
PLL UNIT
VCO UNIT
FROM REMOTE P1 (OPTION)
FROM SW4 P12
FROM SW4 P8
FROM SW4 P14
TO MAIN J8
TO MAIN J3
FROM EF P4
TO IF J2
FROM EF P3

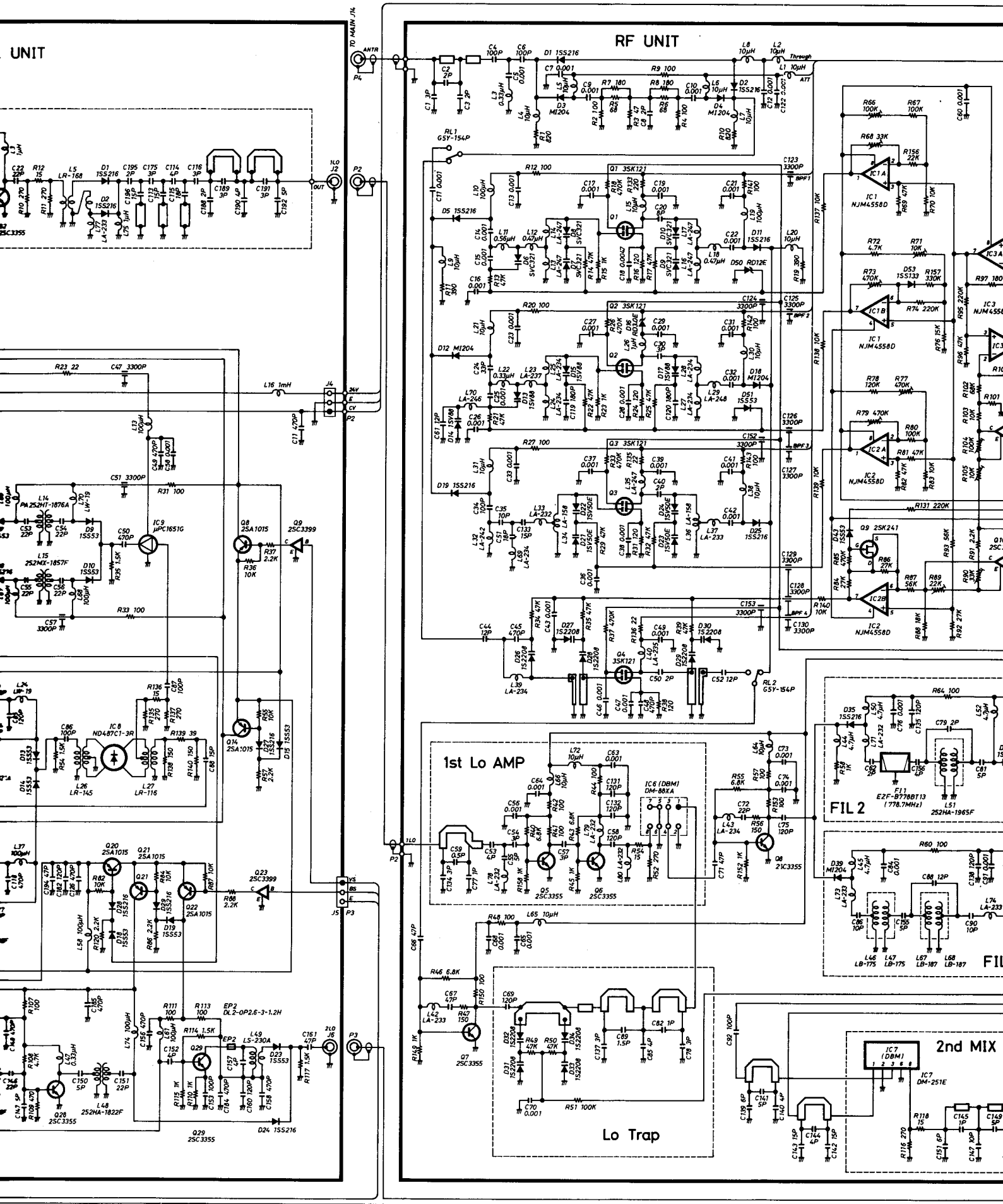

To upgrade qu
be subject to

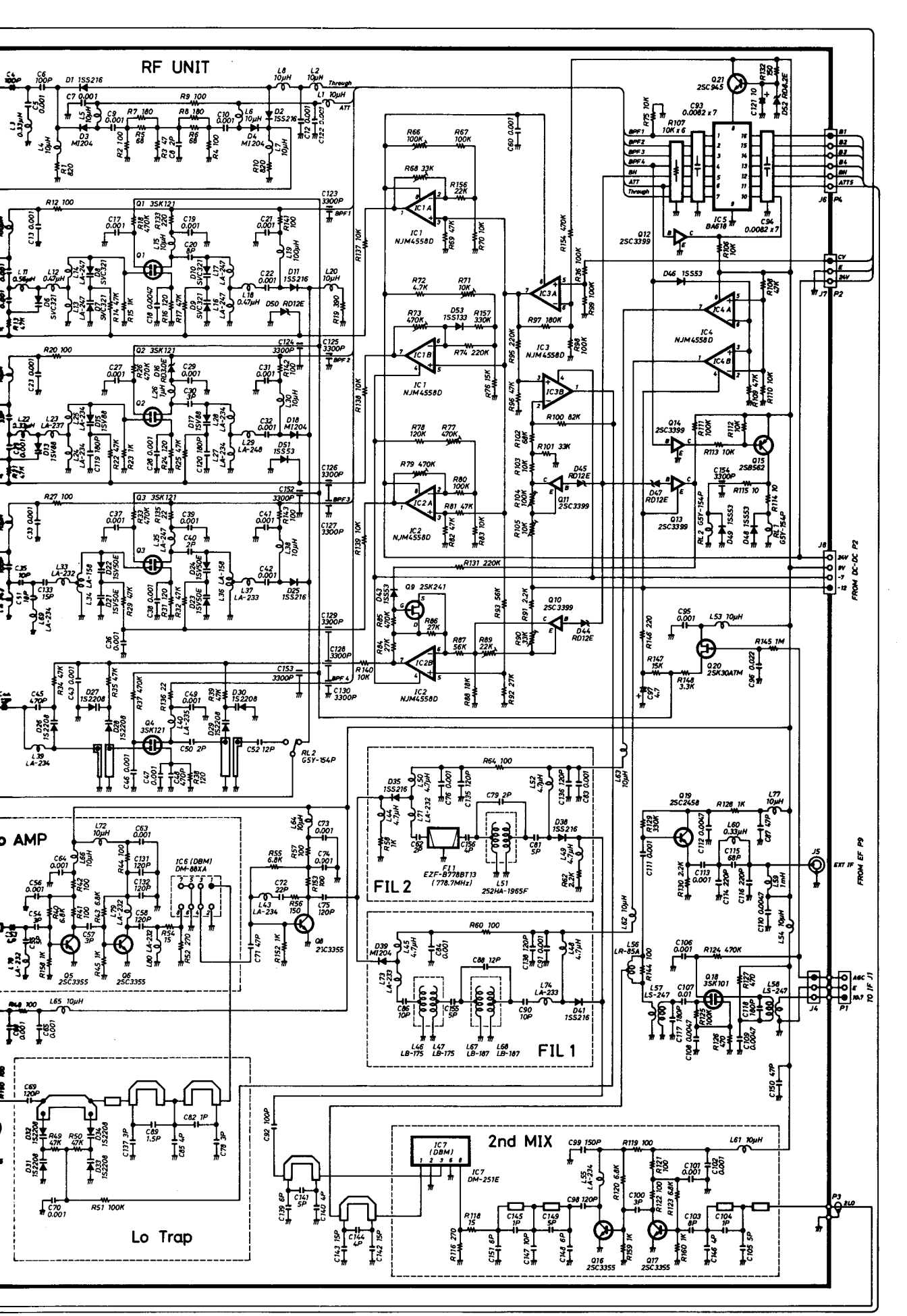

ICOM ICOM INCORPORATED

To upgrade quality, some components may be subject to change without notice.

A-0775

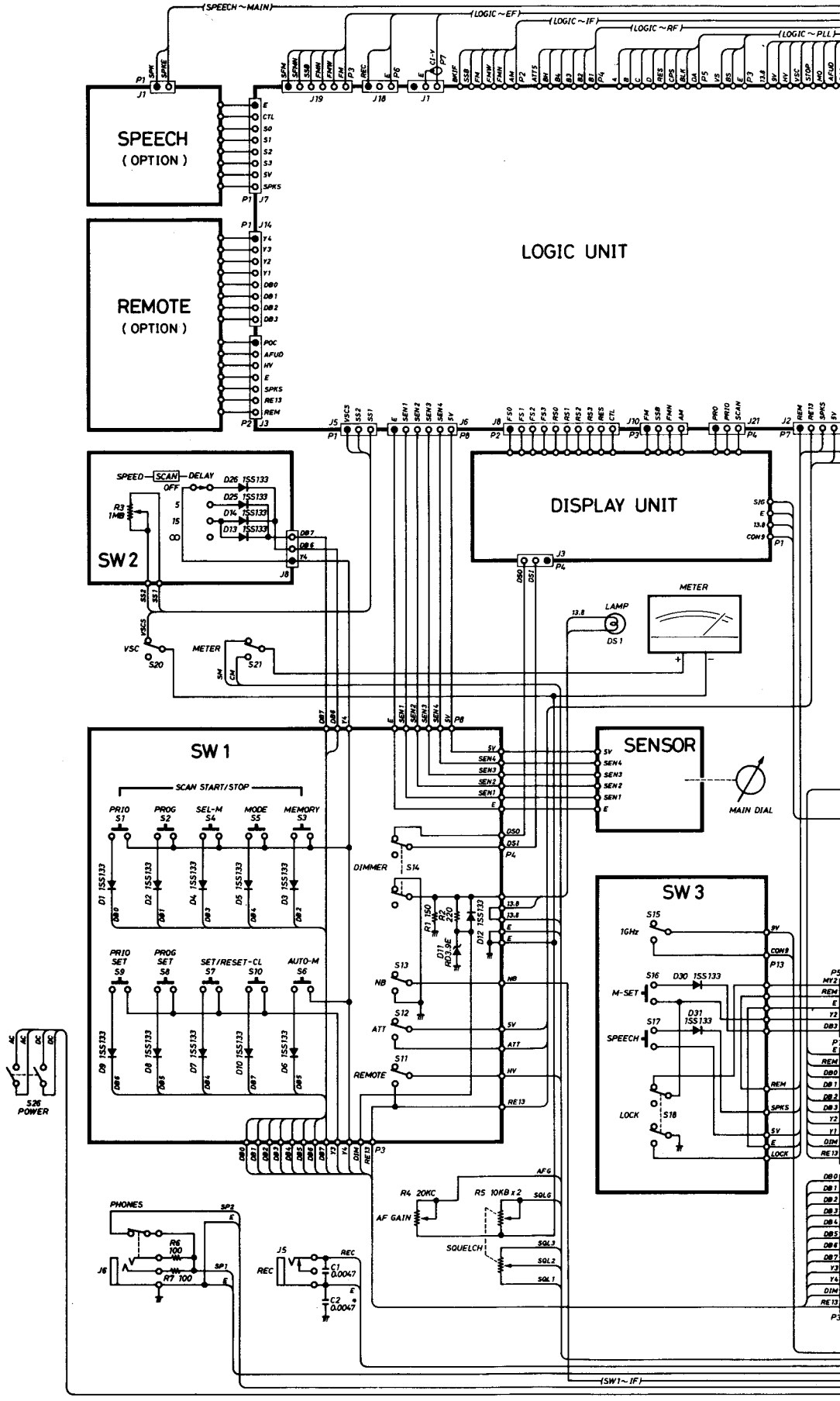
SPEECH ~ MAIN
LOGIC ~ EF
LOGIC ~ IF
LOGIC ~ RF
LOGIC ~ PLL
SPEECH
(OPTION)
REMOTE
(OPTION)
LOGIC UNIT
DISPLAY UNIT
SENSOR
MAIN DIAL
METER
LAMP
DS1
SW 1
SW 2
SW 3
SCAN START/STOP
PR10 S1
PROG S2
SEL-M S4
MODE S5
MEMORY S3
PR10 SET S9
PROG SET S8
SET/RESET-CL S7
S10
AUTO-M S6
DIMMER S14
NB S13
ATT S12
REMOTE S11
S15 1GHz
M-SET S16
SPEECH S17
LOCK S18
S26 POWER
PHONES
AF GAIN R4 20KC
R5 10KB x 2
SQUELCH
REC
C1 0.0047
C2 0.0047
SPEED SCAN DELAY
OFF
R3 1MB
D26 1SS133
D25 1SS133
D14 1SS133
D13 1SS133
VSC S20
METER S21
D1 1SS133
D2 1SS133
D4 1SS133
D5 1SS133
D3 1SS133
D9 1SS133
D8 1SS133
D7 1SS133
D10 1SS133
D6 1SS133
D30 1SS133
D31 1SS133
D11 RD3.9E
D12 1SS133
R1 150
R2 220
(SW1 ~ IF)

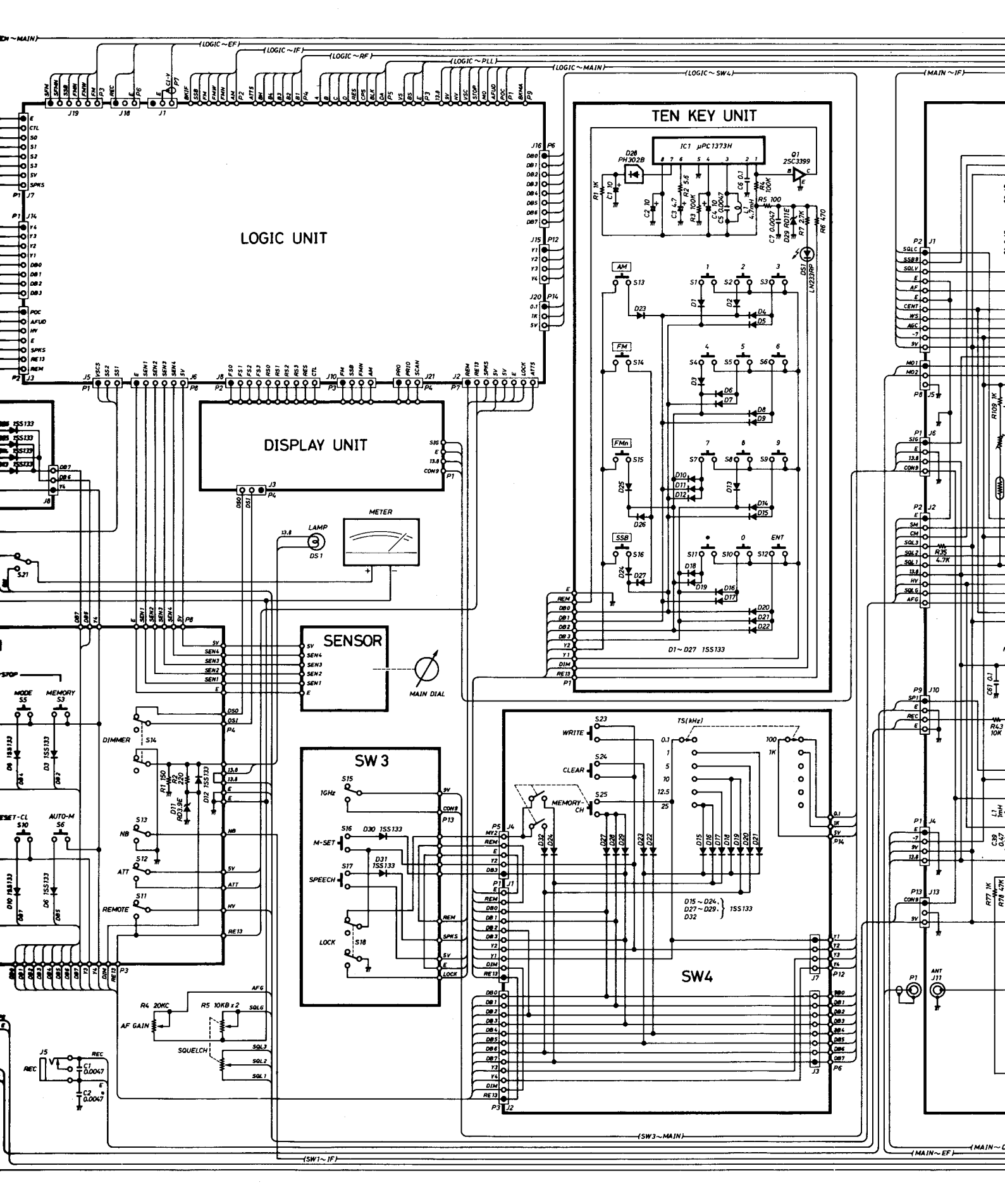

LOGIC UNIT
TEN KEY UNIT
DISPLAY UNIT
SENSOR
SW 3
SW4
METER
LAMP
MAIN DIAL
DIMMER
NB
ATT
REMOTE
AF GAIN
SQUELCH
WRITE
CLEAR
MEMORY-CH
TS(kHz)
1GHz
M-SET
SPEECH
LOCK
D1~D27 1SS133
D15~D24, D27~D29, D32 1SS133
(LOGIC~EF)
(LOGIC~IF)
(LOGIC~RF)
(LOGIC~PLL)
(LOGIC~MAIN)
(LOGIC~SW4)
(MAIN~IF)
(SW3~MAIN)
(SW1~IF)
(MAIN~EF)

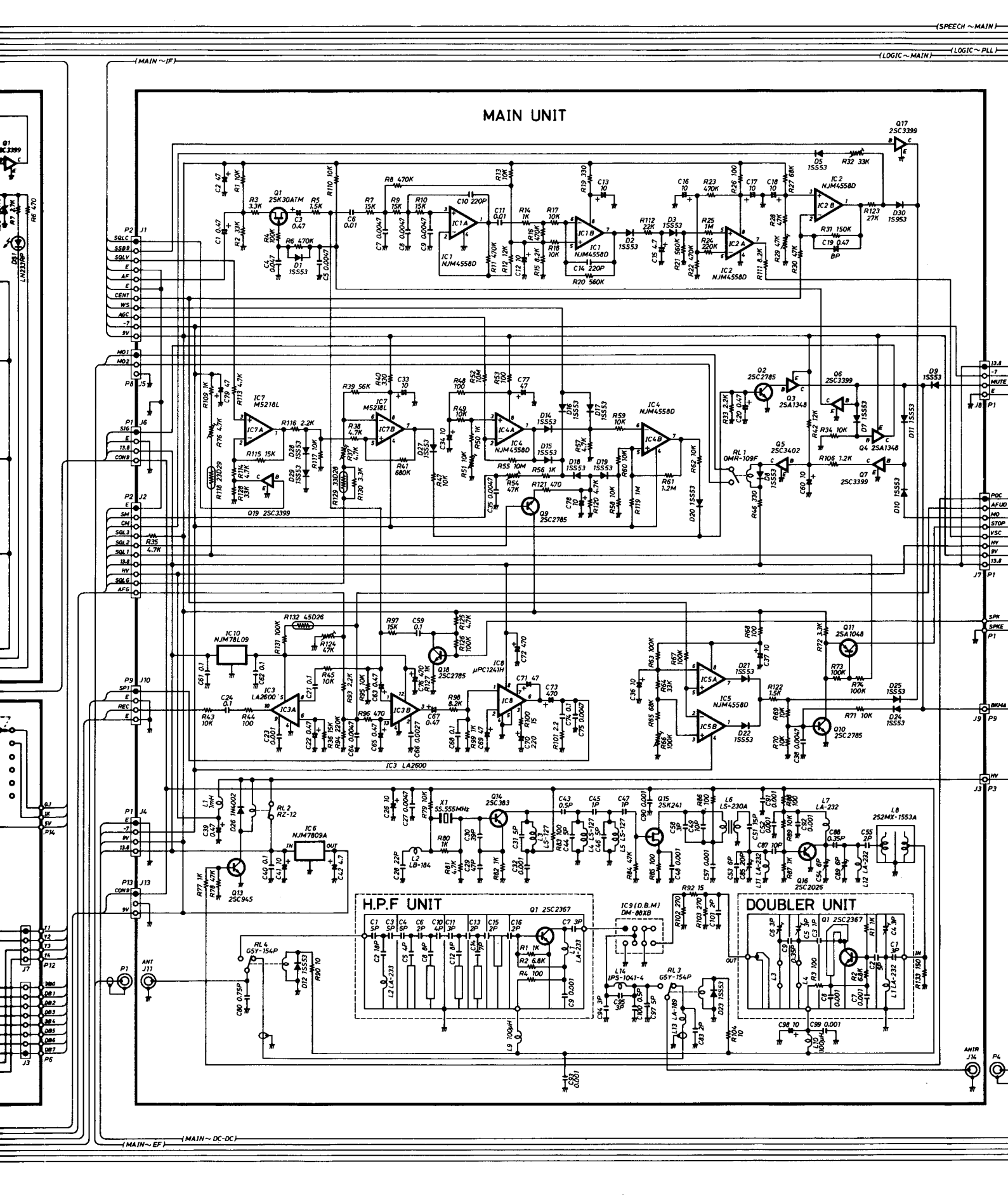
MAIN UNIT
H.P.F UNIT
DOUBLER UNIT
IC3 LA2600
(SPEECH ~MAIN)
(LOGIC ~MAIN)
(LOGIC ~PLL)
(MAIN ~IF)
(MAIN ~EF)
(MAIN ~DC-DC)

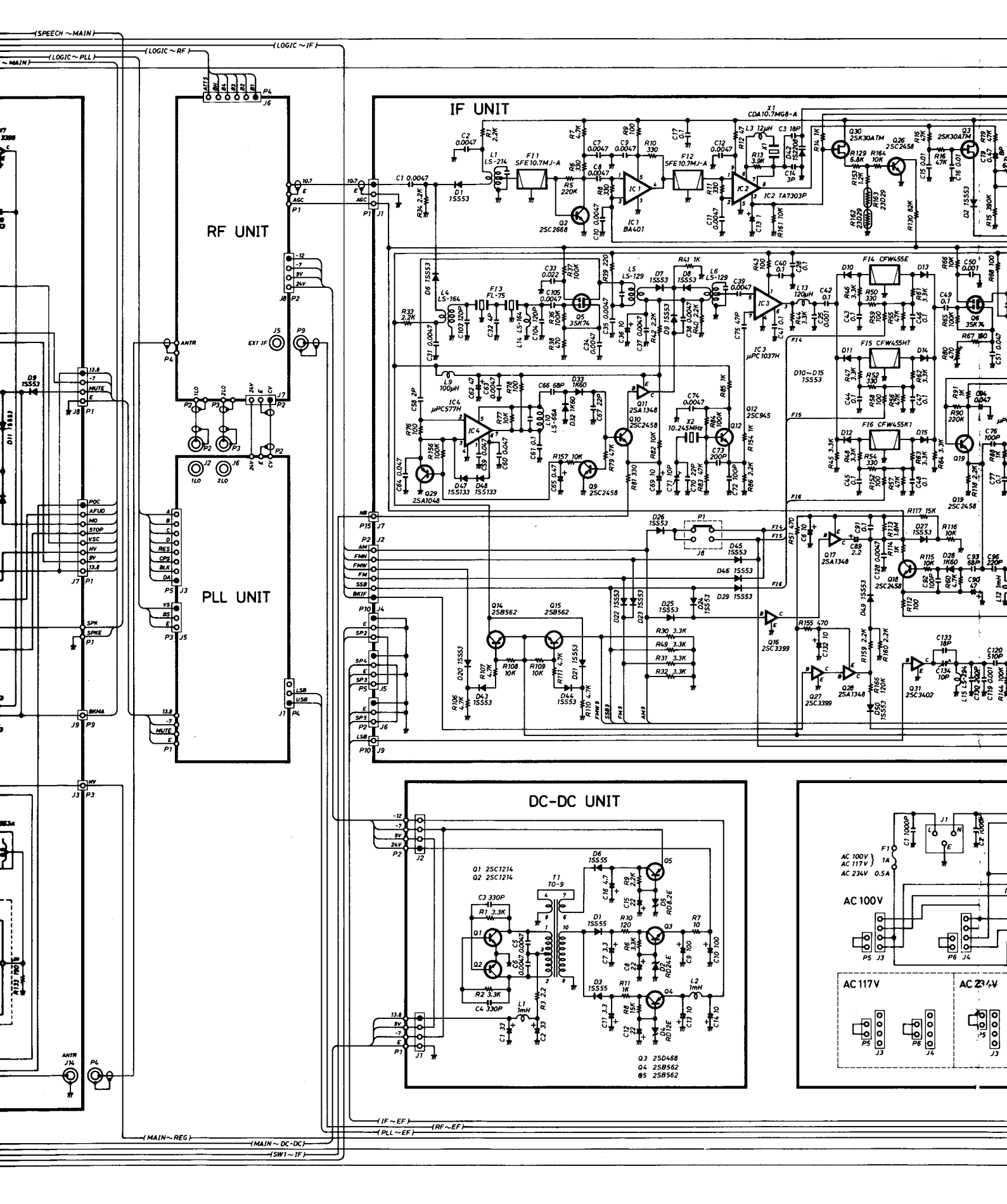
IF UNIT
RF UNIT
PLL UNIT
DC-DC UNIT
(SPEECH ~MAIN)
(LOGIC ~MAIN)
(LOGIC ~PLL)
(LOGIC ~RF)
(LOGIC ~IF)
(IF ~EF)
(RF ~EF)
(PLL ~EF)
(MAIN ~REG)
(MAIN ~DC-DC)
(SW1 ~IF)
IC1 BA401
IC2 TA7303P
IC3 μPC1037H
IC4 μPC577H
AC 100V
AC 117V
AC 234V

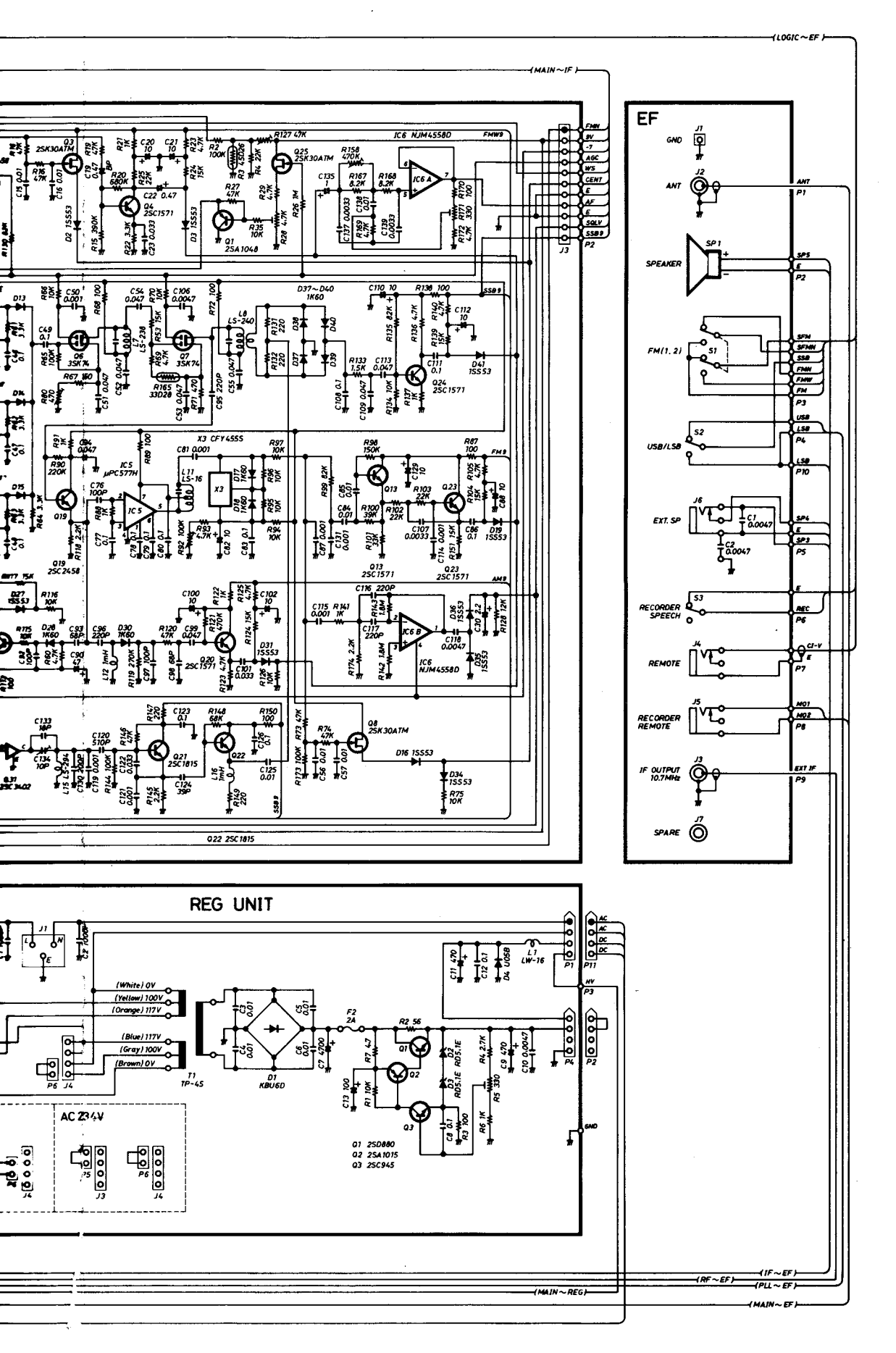
(LOGIC~EF)
(MAIN~IF)
EF
J1
GND
J2
ANT
ANT
P1
SP1
SPEAKER
SP5
E
P2
FM(1, 2)
S1
SFM
SFMN
SSB
FMN
FMW
FM
P3
USB/LSB
S2
USB
LSB
P4
P10
EXT. SP
J6
C1 0.0047
C2 0.0047
SP4
E
SP3
P5
RECORDER SPEECH
S3
E
REC
P6
REMOTE
J4
CI-V
E
P7
RECORDER REMOTE
J5
MO1
MO2
P8
1F OUTPUT 10.7MHz
J3
EXT 1F
P9
SPARE
J7
FMW
9V
+7
AGC
WS
CENT
E
AF
E
SQLV
SSB9
J3
P2
IC6 NJM4558D
IC6 A
IC6 B
Q25 2SK30ATM
Q1 2SA1048
Q4 2SC1571
Q24 2SC1571
Q13 2SC1571
Q23 2SC1571
Q8 2SK30ATM
Q22 2SC1815
Q21 2SC1815
Q20 2SC1571
Q19 2SC2458
IC5 μPC577H
X3 CFY455S
REG UNIT
(White) 0V
(Yellow) 100V
(Orange) 117V
(Blue) 117V
(Gray) 100V
(Brown) 0V
P6 J4
T1 TP-45
D1 KBU6D
F2 2A
AC 234V
J4
J5
J3
P6
J4
Q1 2SD880
Q2 2SA1015
Q3 2SC945
GND
AC
AC
DC
DC
P11
MV
P3
P4
P2
(1F~EF)
(RF~EF)
(PLL~EF)
(MAIN~REG)
(MAIN~EF)



ICOM INCORPORATED

1-6-19, Kamikuratsukuri, Hirano-ku, Osaka 547, Japan
Phone: (06) 793-5301
Telex : 05277822 ICOMTR J
Fax : (06) 793-0013

ICOM AMERICA, INC.
2380 116th Avenue N.E.,
Bellevue, WA 98004
Phone: (206) 454-8155
Telex : 230-152210 ICOM AMER BVUE
Fax : (206) 454-1509

3150 Premier Drive, Suite 126,
Irving, TX 75063
Phone: (214) 550-7525
Fax : (214) 550-7423

1777 Phoenix Parkway, Suite 201,
Atlanta, GA 30349
Phone: (404) 991-6166

ICOM CANADA, LTD.,
3071-#5 Road, Unit 9,
Richmond, B.C.,
V6X 2T4 Canada
Phone: (604) 273-7400
Fax : (604) 273-1900

ICOM (EUROPE) GmbH,
Himmelgeister Strasse 100,
4000 Düsseldorf 1,
West Germany
Phone: 0211-346047
Telex : 41-8588082 ICOM D
Fax : 0211-333639

ICOM AUSTRALIA, PTY., LTD.,
7 Duke Street, Windsor 3181,
Victoria, Australia
Phone: (03) 529-7582
Telex : 71-35521 ICOMAS
Fax : (03) 529-8485