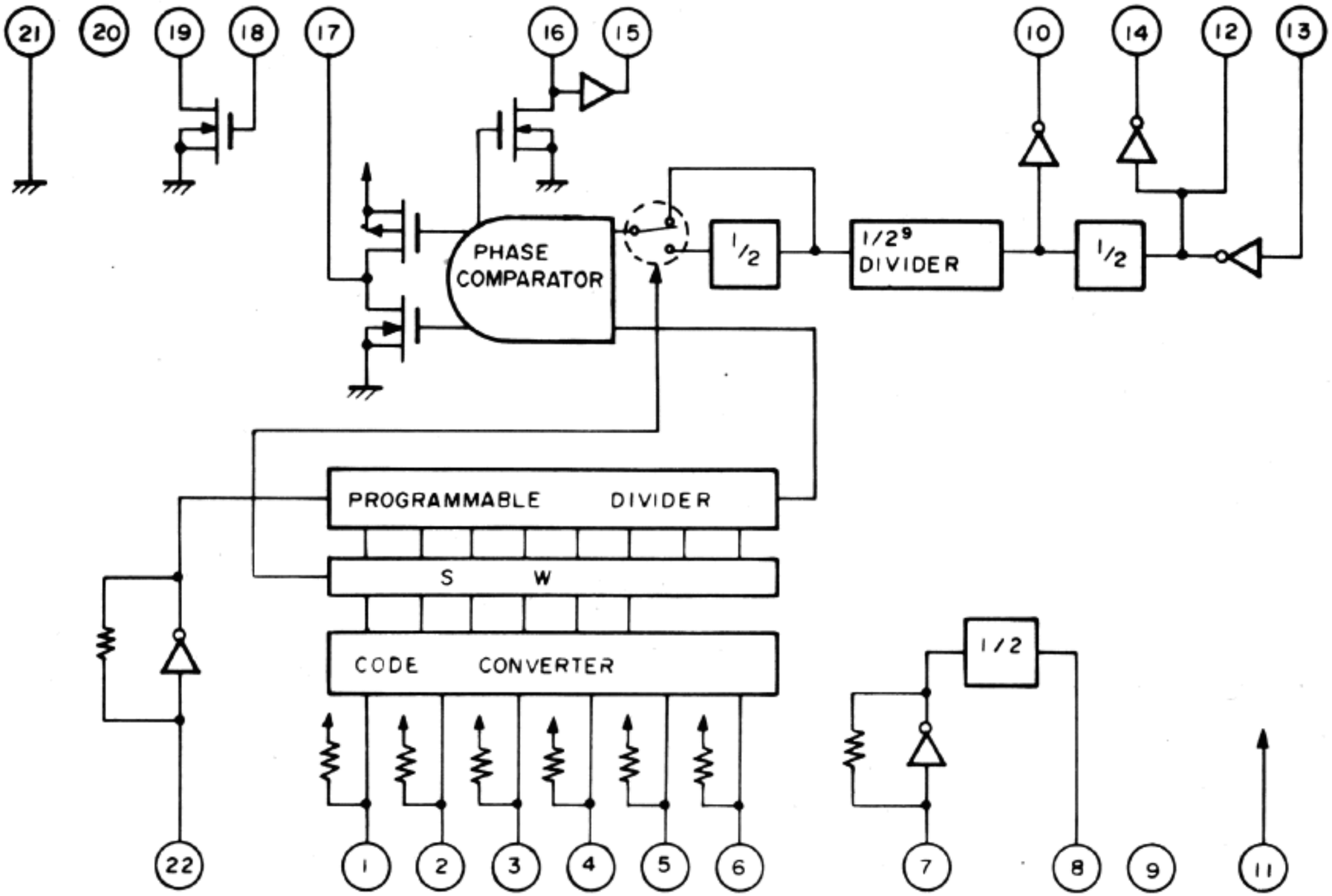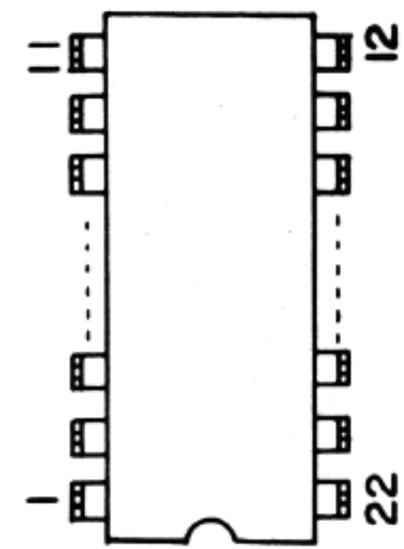ROM coded 40 channels only