D.45
Vid SSB

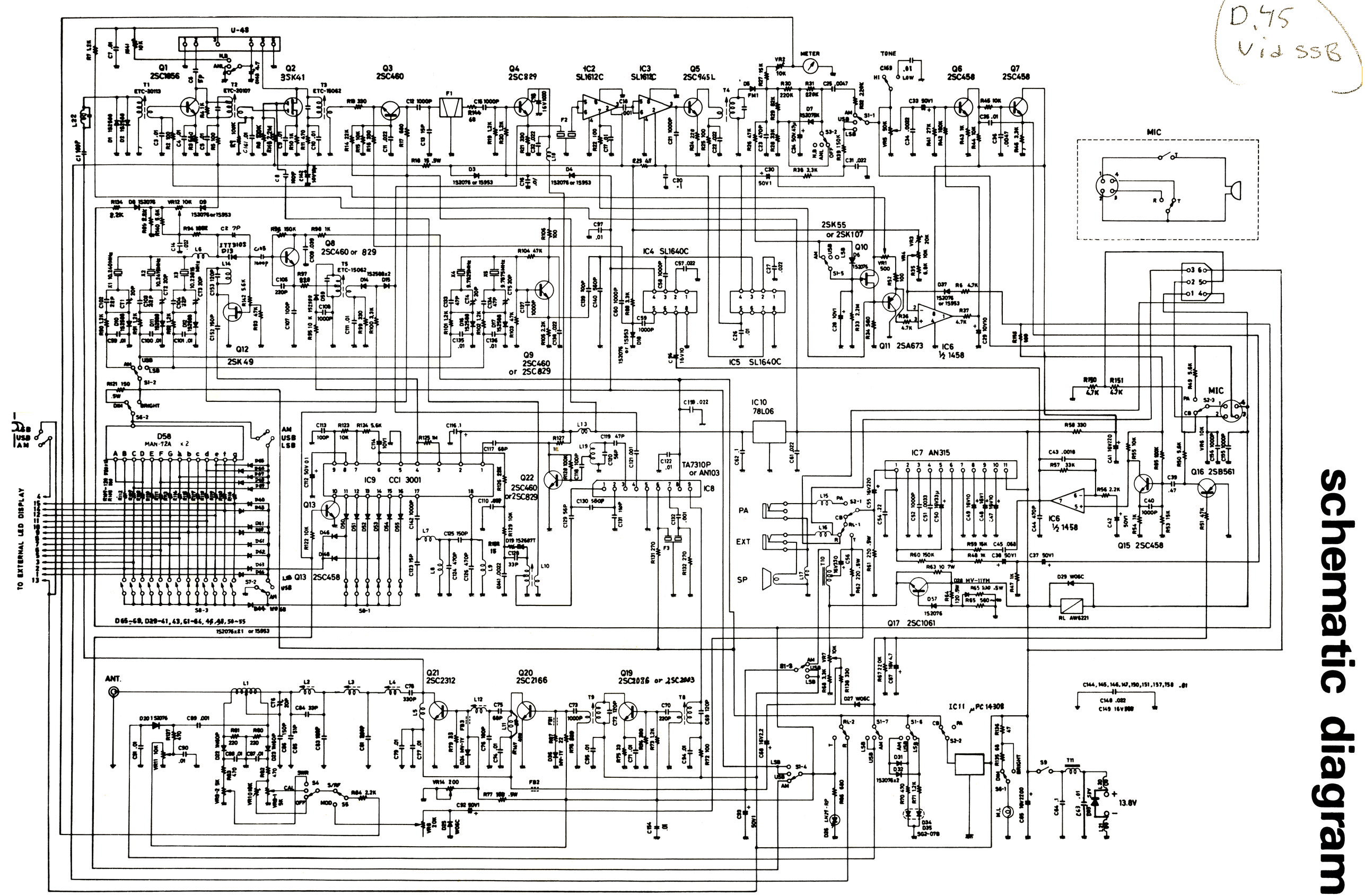

KRACO 2500/SSB

A quality scan / PDF conversion brought to you by www.rigpix.com
The original printed schematic diagram was not very high resolution, so this is as good as it gets