Price $3.00

JOHNSON

MESSENGER
122-123A
123B-123SJ

CITIZENS RADIO TRANSCEIVER
PART NO. 242-0122-xxx
242-0123-002
242-0123-003
242-0123-004



Third Printing
Messenger 122, A-D Models
Messenger 123A, A-H Models
Messenger 123B, A-B Models
Messenger 123SJ, A-C Models
November, 1975

SERVICE MANUAL

MESSENGER
122-123A
123B-123SJ

CITIZENS RADIO TRANSCEIVER
PART NO. 242-0122-xxx
242-0123-002
242-0123-003
242-0123-004

TABLE OF CONTENTS

SECTION	PAGE
1 GENERAL INFORMATION	5
1.1 Scope of Manual	5
1.2 Transceiver Description	5
1.3 Accessories	5
1.4 Serial Number Interpretation	5
1.5 Factory Customer Service	5
1.6 Factory Returns	5
1.7 Replacement Parts	5
2 SPECIFICATIONS	6
2.1 General	6
2.2 Receiver	6
2.3 Transmitter	6
3 INSTALLATION	7
3.1 Mobile Installation	7
3.2 Base Station Installation	8
3.3 Final Checkout	8
3.4 Noise Suppression	9
4 CIRCUIT DESCRIPTION	11
4.1 General	11
4.2 Frequency Synthesizer	11
4.3 Receiver	11
4.4 Transmitter	12
4.5 Meter Circuitry	12
5 SERVICING	13
5.1 General	13
5.2 Transistor Troubleshooting	13
5.3 Receiver Troubleshooting	15
5.4 Transmitter Troubleshooting	18
5.5 Frequency Synthesizer	20
5.6 AC Power Supply	21
6 ALIGNMENT	23
6.1 General	23
6.2 Receiver Alignment	23
6.3 Transmitter Tuneup	25
7 PARTS LIST	26
Engineering Changes	
Component Layouts	
Schematics	

LIST OF ILLUSTRATIONS

FIGURE	PAGE
1-1 Messenger 123A Base Station	4
1-2 Messenger 122 Mobile System	4
3-1 Typical Mobile Installation	8
4-1 Block Diagram	10
5-1 In Circuit Transistor Testing	14
5-2 Out of Circuit Transistor Resistance Measurements	15
5-3 Transmitter RF Waveforms	18
5-4 Oscilloscope RF Pickup Loop Fabrication	19
5-5 Messenger 123A Crystal Switch Layout	21
6-1 Alignment Tools	23
6-2 Receiver Test Setup	23
6-3 Speaker Load Fabrication	23
6-4 Transmitter Test Setup	25

LIST OF TABLES

TABLE	PAGE
1-1 Extra Cost Accessories	5
3-1 Installation Tools	7
3-2 Items Supplied for Transceiver Installation	7
5-1 Typical AGC Levels	16
5-2 Typical Receiver Signal Levels	17
5-3 Typical Transmitter RF Voltage Readings	18
5-4 Frequency Synthesizer Trouble Analysis	20
5-5 Transmitter Channel Frequency Limits	20
5-6 Frequency Synthesizer Crystal Trouble Analysis	20
5-7 Power Supply Troubleshooting	22
6-1 Channel Frequencies	25



MESSENGER 123A BASE STATION
FIGURE 1-1



MESSENGER 122 MOBILE SYSTEM
FIGURE 1-2

SECTION 1
GENERAL INFORMATION

1.1 SCOPE OF MANUAL

This service manual includes service and alignment instructions for the Messenger 122, 123A, 123B and 123SJ Citizens Radio Transceivers.

1.2 TRANSCEIVER DESCRIPTION

The Messenger 122 is a 23 channel citizens radio transceiver which incorporates a 14 crystal solid state frequency synthesizer to generate the receiver and transmitter channel frequencies.

The Messenger 123A is a Messenger 122 transceiver with a meter circuit, metal cabinet and rotary controls.

Later Messenger 123A models have been adapted to operate from either positive or negative ground supply voltage. The positive/negative ground transceiver, Part No. 242-0123-003, can be divided into three versions with the final version being the Messenger 123SJ, Part No. 242-0123-004.

The first version is an interim model which has a Messenger 123A front panel upper overlay and an exposed positive/negative ground conversion switch with a locking plate. This model had a limited production of approximately 1500 units before it was discontinued and replaced by the Messenger 123B.

The Messenger 123B is the second version of the positive/negative ground transceiver. The Messenger 123B has a new front panel overlay and a submerged positive/negative ground conversion switch on the rear panel.

The Messenger 123SJ is the final version and has the same positive/negative ground conversion switch as the Messenger 123B but it also has a solid state LED, "S"/power meter. The Messenger 123SJ replaces the Messenger 123B. Electrically all three transceivers are identical, the printed circuit board has been isolated from the chassis rail and the switching circuit has been added. Refer to the component layout for the solid state meter circuit board components layout.

With the addition of the 117 VAC power supply, Part No. 239-0125-001, each transceiver converts to a base station transceiver.

1.3 ACCESSORIES

Refer to Table 1-1 for a list of available accessories which can be purchased as extra cost items.

TABLE 1-1
EXTRA COST ACCESSORIES

Description	Part Number
117 VAC Power Supply	239-0125-002
DC Voltage In-Converter	239-0120-001
External Speaker	250-0064-001

1.4 SERIAL NUMBER INTERPRETATION

The transceiver serial number is printed on a white adhesive backed cloth which is attached to the back of the transceiver rear panel. Each serial number contains an alphabetical designator which indicates a major revision; an "A" serial number prefix indicates that the transceiver includes changes specified in revision A.

1.5 FACTORY CUSTOMER SERVICE

A liaison between the customer and the factory is provided by the E. F. Johnson Company Customer Service Department. This department is available for consultation and assistance on technical problems, parts information, and availability of local and factory repair facilities.

If you write to the Customer Service Department, please include any information that may be helpful in solving your problem. Contact:

E. F. Johnson Company
Customer Service Department
Waseca, Minnesota 56093
Phone: (507) 835-2050

1.6 FACTORY RETURNS

A warranty registration card is attached to the accessory package, and should be filled out and mailed as soon as possible to validate your warranty.



Normally, repair service is available locally through authorized Johnson Citizens Radio Service Centers; a list of these service centers is packed with each unit when it leaves the factory. Copies are available upon request from the factory Customer Service Department. Do not return any equipment to the factory without authorization from the Customer Service Department. Return accessories used with the transceiver, such as power supply or DC voltage In-Converter.

1.7 REPLACEMENT PARTS

The authorized Johnson Service Centers stock commonly needed replacement parts. When a part is not available locally it can be ordered from the Customer Service Department. When ordering, please supply the following information:

Model number of the unit;
Serial number of the unit;
Description of the part;
Part number of the part.

SECTION 2
SPECIFICATIONS

2.1 GENERAL

Measurements made per EIA Standard RS-382.

Test conditions:

a. Standard test voltage: 13.8 VDC negative ground.

b. Audio levels are given in dB on an AC VTVM calibrated for 0 dB = 0.775 volts.

c. Input values to the microphone are given as the level to a 6800 pF ±5% capacitor in series between the audio oscillator and the microphone input.

d. All microvolts are at the antenna terminal and numbers are 1/2 the microvolts into a 50 ohm 6 dB pad.

Frequency Range	26.965 - 27.255 MHz
Channels	23
Dimensions of Enclosure	M122: 5.08 cm high x 15.71 cm wide x 22.86 cm deep (2" high x 6-3/16" wide x 9" deep) M123A: 6.25 cm high x 15.7 cm wide x 24.5 cm deep (2-1/2" high x 6-3/16" wide x 9-5/8" deep)
Unit Weight	M122: Approximately 1.190 kg (2 lb. 10 oz.) M123A: Approximately 1.66 kg (3.66 lb.)
Shipping Weight	M122: Approximately 1.644 kg (3 lb. 10 oz.) M123A: Approximately 2.2 kg (4.85 lb.)
Microphone	High capacity ceramic element. Cycolac case. Push-to-talk switch, hang-up stud.
Compliance	FCC Type Accepted, Rule 95 (D) DOC Type Approved, RSS 136
Metering	(123A): S meter and relative RF output

2.2 RECEIVER

Sensitivity	10 dB (S+N)/N ratio with 0.5 microvolt (30% modulation at 1000 Hz)
Selectivity	6 kHz bandwidth at -6 dB (EIA 2 signal generator method) 30 kHz bandwidth at -60 dB
Frequency Control	±0.005% crystal from -30°C to +50°C
Spurious Rejection	50 dB (except image of 10 dB) (123A): 42 dB (except image of 12 dB)
Antenna Impedance	50 ohms
Audio Output Power	2.5 watts at 10% distortion at 8 ohms (30 μV, 1000 Hz, 30% modulation)
Speaker Impedance	8 ohms
Tight Squelch	50 microvolts (30 microvolts minimum)
Squelch Sensitivity	Less than 1 dB
Squelch Noise Immunity	Highly immune to impulse-type noise
Intermediate Frequency	455 kHz
AGC Characteristics	Flat within ±6 dB from 100,000 to 5 microvolts with 12 dB rolloff from 5 to 0.5 microvolt for superior noise quieting
Noise Limiting	Series-type, automatic threshold adjustment and IF clipping
Circuitry	All solid state, single conversion

2.3 TRANSMITTER

Emission	6A3
Frequency Control	±0.005% crystal from -30°C to +50°C
RF Power Output	4 watts maximum at 13.8 VDC
RF Spurious and Harmonic Attenuation	50 dB
Output Impedance	50 ohms
Audio Frequency Response	±6 dB, 300-3000 Hz (123A): +2, -14 dB, 300-3000 Hz
Modulation	80% minimum, 100% maximum, positive and negative
POWER DEMAND	13.8 volts DC input Receive: Squelched 0.4 ampere Transmit: 1.2 ampere
Circuit Protection	2 ampere fuse
MOUNTING	Mounting bracket furnished with unit

SECTION 3
INSTALLATION

3.1 MOBILE INSTALLATION

3.1.1 ANTENNA

A good antenna installation is essential for satisfactory transceiver performance. Select the desired antenna location and refer to the installation instructions included with the antenna.

3.1.2 INSTALLATION TOOLS

The tools in Table 3-1 should be on hand when installing the transceiver. Other tools might be necessary for special installation conditions.

TABLE 3-1
INSTALLATION TOOLS

Tool	Use
Center punch	Mark mounting screw holes.
3/8" drill	Drill mounting screw holes.
3/8" drill bit	Antenna mounting hole.
13/64 drill bit	Transceiver mounting bracket holes.
6" flat blade screwdriver	Microphone hanger screws.
6" adjustable wrench	Mounting bracket screws and antenna mounting nuts.
Combination pliers	Tap connector.

3.1.3 ITEMS SUPPLIED FOR TRANSCEIVER INSTALLATION

Check the items in Table 3-2 against the items supplied in the accessory package.

TABLE 3-2
ITEMS SUPPLIED FOR TRANSCEIVER INSTALLATION

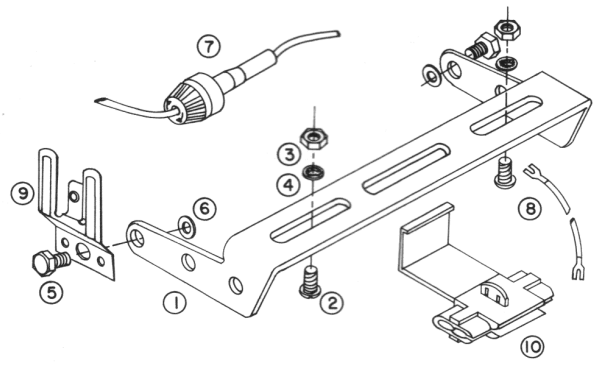

Item No.	Qty.	Description	Part Number
1	1	Dash mounting bracket	017-1249-001
	1	Hardware package for dash mounting bracket	023-2615-001
		Includes:	
2	2	Screws, #10-32-x 5/8	011-0229-020
3	2	Nuts, #10-32	012-0109-002
4	2	Lockwashers, #10	029-0001-003
5	2	Screws, 1/4 x 20 x 5/16	011-0322-010
6	2	Washers, cushion	018-0822-001
7	1	Cable, 13.8 VDC battery, fused	023-1652-001
		Includes:	
		Fuseholder for 1/4 dia x 1/4 L fuse	534-1004-005
		Fuse, 2 ampere	534-0003-024
		Quick-disconnect lead assembly	023-2558-001
		29" wire #18, stranded, red	071-0912-042
		Marker, fuse value (2 amp)	559-3009-002
8	1	Lead assembly, negative, for AC power supply	597-0001-011
9	1	Microphone holder	537-9004-002
10	1	Tap connector package	023-2209-001

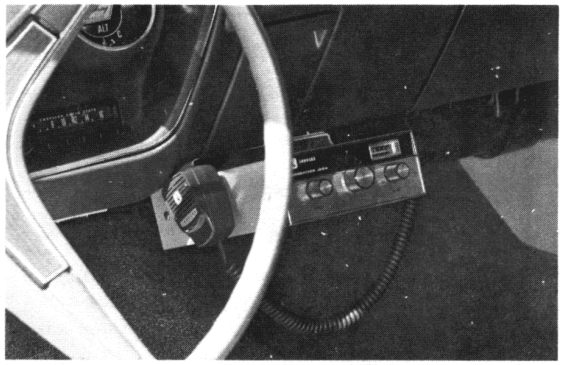

TYPICAL MOBILE INSTALLATION
FIGURE 3-1

3.1.4 TRANSCEIVER

Install the transceiver in a location with best operating convenience and maintenance accessibility in mind.

a. Select the desired transceiver location, drill dash mounting bracket holes and mount the bracket with the provided hardware. Avoid installing the transceiver in the direct air stream of the vehicle heater. Temperatures in this area can measure up to 150°F and can cause component failure.

b. Refer to instructions printed on the hardware envelope.

c. Connect the power cable to the accessory terminal of the vehicle ignition switch or another 12 VDC source, using the tap connector.

1. Refer to installation instructions printed on the tap connector envelope.

CAUTION

The Messenger 122 and 123A transceivers are factory wired for negative ground operation. Serious damage can result if they are installed in a positive ground vehicle without using an E. F. Johnson In-Converter, Part No. 239-0120-001.

d. Connect the antenna transmission line to the transceiver antenna connector.

3.2 BASE STATION INSTALLATION

3.2.1 ANTENNA AND TRANSMISSION LINE INSTALLATION

The quality and type of antenna installation determines if a transceiver will operate at its maximum capability.

a. Select the antenna type and location which fits the particular base station requirement.

1. Make sure the location, height and type of antenna are adequate for the intended use of the base station. (Height must be in accordance with FCC restrictions.)

b. Select the proper transmission line type for the particular installation requirement.

1. Connect the transmission line from the antenna to the transceiver. Keep the line as short as possible for maximum efficiency.

3.2.2 AC POWER SUPPLY INSTALLATION

a. Attach the AC Power Supply, Part No. 239-0125-001, to the transceiver and connect the transceiver for proper base station operation.

1. Position the transceiver upside down on a flat surface.

2. Place the power supply on the transceiver, line up the screw holes with captive screws and tighten the screws.

3. Connect the ground strap from a number 8 screw on the transceiver rear panel to a number 8 screw on the power supply.

3.3 FINAL CHECKOUT

a. Connect a Bird Model 43 with 10A element or equivalent wattmeter into the transmission line.

b. Adjust the antenna for best VSWR following the manufacturer's instructions. The transceiver has been aligned at the factory and the output network will not normally require tuning to match it to the antenna. The measured VSWR should be 1.5 to 1 or less.

c. Check the transmitter power output. Typical power is 3.5 watts.

d. Check the transmitter frequency with a frequency meter. The maximum allowable tolerance from the center frequency is ±0.005%.

e. Check the modulation. Minimum acceptable is 80% upward and downward. A suggested method is outlined in Section 5.

f. Give the transceiver a complete operational checkout. Make several contacts with other units in the system and correct any noise suppression problems that may affect transceiver performance.

3.4 NOISE SUPPRESSION

Vehicle electrical noise of some sort is a problem in almost all new mobile radio installations.

a. Before beginning any special noise suppression steps, be sure that the vehicle is well tuned. Clean and tighten all electrical connections, including alternator, battery, regulator and coil connections. Perform the following maintenance steps as necessary:

   1. Solder crimped spark plug and distributor leads.

   2. Clean and regap or replace spark plugs and ignition points.

   3. Check and clean alternator rings and brushes.

   4. Retune the engine every 10,000 miles or twice a year, whichever occurs first.

b. Ordinarily several sources of noise are present in any vehicle, with the strongest covering the others. Drive to a relatively quiet location (free of man-made electrical interference such as noisy power lines, industrial noise or other vehicles.

c. Test for ignition noise with a weak signal or no signal on channel. Vehicle may be standing still. Ignition noise will be present at all engine speeds and, if severe, may make a normally readable signal unreadable. Ignition noise is a "popping" sound which varies with engine speed. It stops immediately when the ignition key is turned off with the engine at a fast idle.

d. A "whining" noise which varies with engine speed and continues with the ignition turned off with the vehicle coasting in gear is characteristic of the alternator.

   1. Check and clean the alternator rings and brushes.

e. An irregular "clicking" sound which disappears at a slow idle is characteristic of the voltage regulator.

f. Irregular popping noises which vary with road surfaces indicate static discharge at any of several locations in the vehicle.

   1. Tighten loose nuts and bolts, and bond large areas such as the fenders and exhaust pipe to the frame with heavy lengths of braid.

g. The E. F. Johnson Company offers a noise suppression kit, Part No. 250-0801-001, which can be ordered from the Johnson dealer or distributor. This kit is useful in reducing noise from the voltage regulator and the alternator or generator. The Champion Spark Plug Company offers, free of charge, an excellent publication on noise suppression, "Giving Two-Way Radio Its Voice".

   To obtain this publication, write to:

   Automotive Technical Services Department
   Champion Spark Plug Company
   Toledo, Ohio 43601

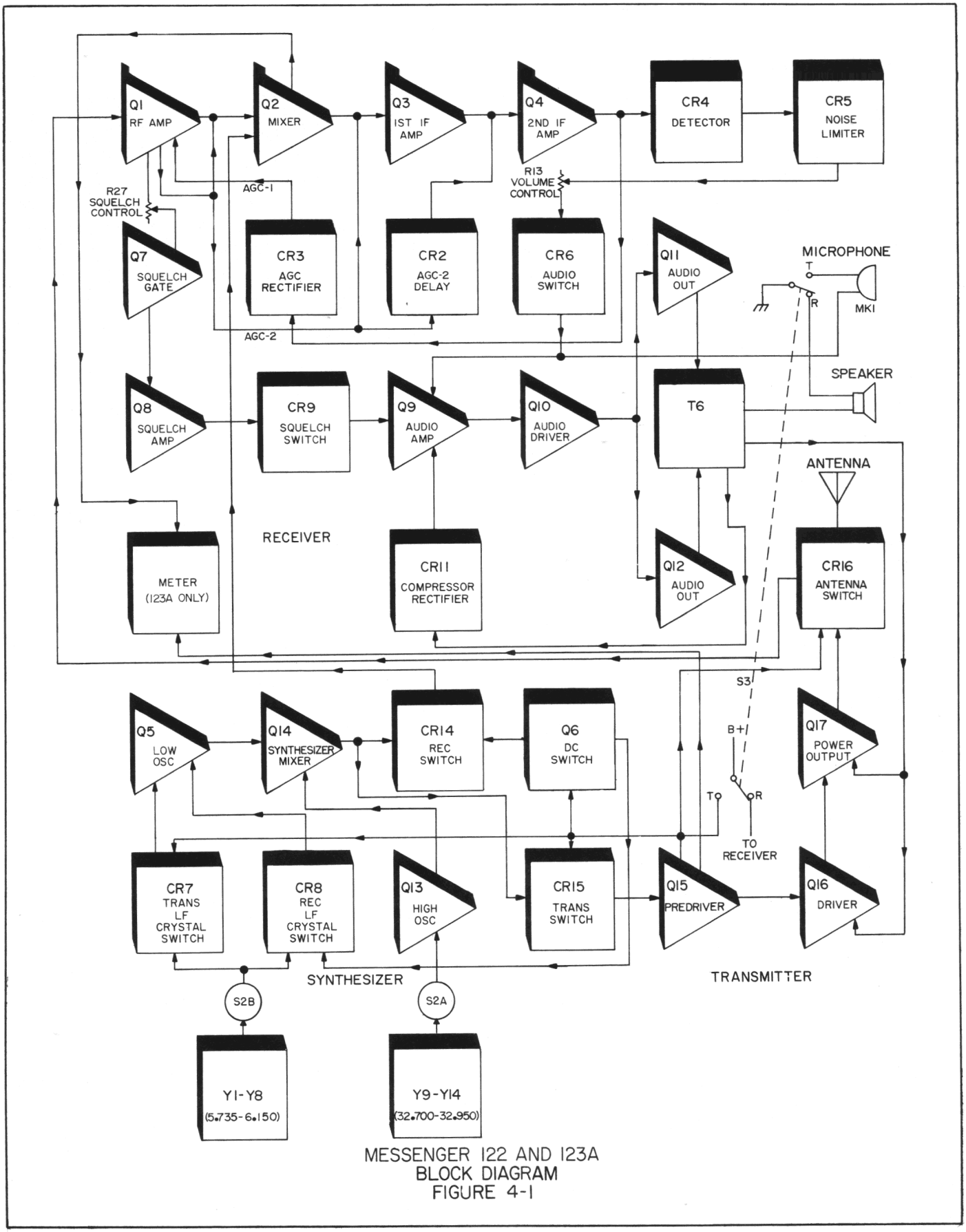

MESSENGER 122 AND 123A
BLOCK DIAGRAM
FIGURE 4-1

SECTION 4
CIRCUIT DESCRIPTION

4.1 GENERAL

The Messenger 122 and 123A are solid state 23 channel citizens radio transceivers which incorporate 14 crystal frequency synthesizers to generate the receiver and transmitter channel frequencies. A front panel mounted meter on the Messenger 123A indicates received signal strength and relative power output.

Refer to the block diagram and the transceiver schematics, located at the back of this manual, when following the circuit description.

4.2 FREQUENCY SYNTHESIZER

4.2.1 GENERAL

The synthesizer consists of three crystal banks, two oscillators, a mixer, a diode switch driver and two diode switching networks. The synthesizer receiver output is 455 kHz below the received frequency and the synthesizer transmitter output is the channel frequency. This is accomplished by two oscillators and one mixer operating in a single side-step operation. There is no frequency multiplication in the synthesizer or in other circuits.

4.2.2 LF OSCILLATOR

The low frequency oscillator is made up of Q5 and its associated circuitry and crystals Y1 through Y8 which operate at their fundamental frequency. Switch S2B selects one of these crystals. Refer to the schematic synthesizer scheme, for the low frequency crystals. The signal from the selected crystal is applied to the base of Q5, which has a common collector to provide a high input impedance. The signal from the emitter of Q5 is coupled through C47 to the base of the synthesizer mixer, Q14. Capacitive voltage divider, C47 and C48, reduces the voltage at the base of Q14 and provides the proper impedance match.

4.2.3 HF OSCILLATOR

The high frequency oscillator, Q13, operates with third overtone crystals, Y9 through Y14. Switch S2A selects one of the HF crystals at the same time as S2B selects a LF crystal. Refer to the synthesizer scheme for the high frequency crystal frequencies. The signal from the selected series resonant crystal is applied directly to the base of the HF oscillator, Q13. The signal from the collector of Q13 is coupled through the oscillator transformer, T7, to the emitter of the synthesizer mixer, Q14.

4.2.4 SYNTHESIZER MIXER

The signal from the low frequency (LF) oscillator, Q5, is coupled to the base of the mixer, Q14, by C47. The signal from the high frequency (HF) oscillator is coupled by T7 to the emitter of the mixer. The mixer output transformer, T8, is tuned for the difference frequency, (HF oscillator output minus the LF oscillator output). On channel 1 receive this would be: 32.700 MHz - 6.190 MHz = 26.510 MHz. While referring to the crystal chart, notice that in the receive condition the synthesizer output is always 455 kHz below the channel frequency. In transmit the synthesizer output is the channel frequency.

4.2.5 DIODE SWITCHING

The synthesizer contains two diode switching networks. Diodes CR7 and CR8 switch transmit and receive LF crystals respectively. CR14 switches the synthesizer output in receive and CR15 switches the output in transmit.

In the receive condition, DC switch Q6 is cut off, allowing receive crystal switch CR8 and receive output switch CR14 to conduct.

The synthesizer is switched to the transmit condition when the microphone push-to-talk switch is depressed. This action allows DC switch Q6 to conduct, which in turn cuts off CR8 and CR14, and turns on transmit crystal switch CR7 and transmit output switch CR15.

4.3 RECEIVER

4.3.1 RF AMPLIFIER

The incoming signal is coupled to the base of the RF amplifier, Q1, through RF input transformer T1. The signal is amplified by Q1 and coupled by T2 to the base of mixer stage Q2.

4.3.2 RECEIVER MIXER AND CERAMIC FILTER

The output of the synthesizer, operating 455 kHz below the signal from the RF amplifier, is coupled through T9, C56, CR14, C37 and C5 to the base of the receiver mixer, Q2. The mixer output is coupled to the ceramic filter, Z1, which passes only the difference frequency of 455 kHz.

Note: The 123A mixer emitter resistor, R4, is shown in the meter circuitry, located below Q15 on the schematic diagram.

4.3.3 IF AMPLIFIER, DETECTOR AND NOISE LIMITER

After the 455 kHz signal is filtered by Z1, it is then amplified by IF amplifiers Q3 and Q4. IF gain control R7 adjusts the gain of Q3. Refer to the alignment section for proper R7 adjustment.

The amplified 455 kHz IF signal is detected by CR4 and noise limiting is accomplished by CR5 and associated components.

The resulting detected and noise limited audio signal is coupled by coupling capacitor C16 to the volume control, R13.

4.3.4 AUTOMATIC GAIN CONTROL (AGC)

When the received signal level increases, a sample output voltage from Q3 is rectified by AGC rectifier CR3, and the resulting negative going AGC-1 voltage is applied to the base of RF amplifier Q1. This negative going voltage appearing at the base of Q1 decreases stage gain, and the emitter voltage of Q1 also goes in a negative direction. Since the emitter of Q1 is connected to the base of mixer Q2, base of IF amplifier Q3 and diode CR2, this applied voltage effectively reduces the overall receiver gain and prevents overloading. Diode CR2 delays the application of AGC-2 voltage to the base of Q2, allowing positive squelch gate operation with weak received signal levels.

When the received signal level decreases, Q1 gain increases, which in turn increases Q2, Q3 and Q4 conduction.

The end result of AGC-1 and AGC-2 action is a relatively constant audio output with varying receiver signal inputs.

4.3.5 AUDIO

The audio signal is coupled from the wiper arm of volume control R13 by coupling capacitor C18 to audio switch CR6, which is biased "on" in the receive condition. From CR6, the audio signal is coupled by coupling capacitor C19 to the base of audio amplifier Q9. The audio is then amplified by audio amplifier Q9, audio driver Q10 and coupled by audio driver transformer T5 to the Class B audio output stage, Q11 and Q12. The amplified audio output from Q11 and Q12 is coupled by audio output transformer T6 to the 8 ohm speaker, LS1.

4.3.6 SQUELCH

The squelch circuitry consists of squelch control R27, squelch gate Q7, squelch amplifier Q8, squelch diode CR9 and associated components. Squelch gate Q7 is normally cut off and squelch amplifier Q8 is normally conducting, which reverse biases squelch diode CR9.

When squelch control R27 is adjusted to forward bias squelch gate Q7, the transistor conducts and a negative going collector voltage cuts off normally conducting Q8. When Q8 cuts off, squelch diode CR9 is forward biased and cuts off audio amplifier Q9, disabling audio output.

When an RF signal is received, Q1 emitter voltage goes in a negative direction because of AGC action. With sufficient signal, this voltage reverse biases squelch gate Q7, forward biases squelch amplifier Q8 and reverse biases squelch diode CR9, enabling audio output.

4.4 TRANSMITTER

4.4.1 SYNTHESIZER MIXER AND RF STAGES

The synthesizer mixer Q14 output is coupled through C56, CR15, C57 and double tuned transformer T10-T11 to the base of the predriver stage, Q15. The predriver stage increases the RF power to a sufficient level to drive the driver stage, Q16, and transformer T13 couples the driver output to the base of power amplifier Q17.

Power amplifier stage Q17 is operated Class C and is designed to operate with a 5 watt DC power input for a power output range of 3 to 4 watts. The antenna is switched from receive to transmit operation by diode CR16, and the power output is coupled through a low pass filter network to the antenna.

4.4.2 MODULATOR AND AUDIO COMPRESSOR

Audio switching diode CR6 is biased "off" in the transmit condition, and effectively isolates the receiver circuitry from the audio amplifier input.

Audio signals from the microphone are coupled to the base of audio amplifier Q9. Amplified audio output from the collector of Q9 are coupled to audio driver Q10 stage where the audio is again amplified, then coupled by driver transformer T5 to the Class B audio output stage, Q11 and Q12. The audio output from Q11 and Q12 is coupled by transformer T6 to RF driver Q16 and power amplifier Q17, where the audio modulates the RF carrier.

Audio compression is provided by sampling the audio output at the T6 secondary. This audio sample is coupled by C32 to the compressor rectifier diode, CR11. After rectification, the audio sample is filtered by RC filter R34 and C29, then applied to the emitter of Q9, which reduces the gain of Q9.

The end result is a relatively constant modulation level with a varying microphone audio input level.

4.5 METER CIRCUITRY

In the receive condition with no signal input, S meter zero control R81 is adjusted for an electrical meter zero. Therefore, when a significant input signal is coupled to Q2 base, Q2 emitter and meter current decrease (due to AGC action), allowing the meter to indicate a signal strength reading which is proportional to the input signal level.

In the transmit condition, some of the RF carrier leaks through CR16 and is coupled through T1 and Q1 to Q2 where it is rectified, causing a meter indication.

The LED meter circuit (123SJ) operates similar to the mechanical meter. In the receive condition, a received signal is rectified by the base-emitter junction of Q2 and applied to the base of Q201, allowing Q201 to conduct and Q202 to cut off. The positive voltage on the collector of Q202 causes Q203 to conduct from ground through one or more of the LED's to B+. The number of LED's that turn on depends on the amplitude of the received signal at Q2.

When the transmitter is modulated, a sample modulation voltage level biases Q203, allowing the appropriate LED display indication.

SECTION 5
SERVICING

5.1 GENERAL

The information in this section serves as a guide for servicing the Messenger 122 and 123A Citizens Radio transceivers. Carefully read this information before attempting to isolate transceiver malfunctions.

Refer to the circuit description, block diagram and schematic to familiarize yourself with the transceiver circuitry.

Always give a defective transceiver a quick visual check before attempting to isolate troubles. Look for overheated or discolored components and cold solder joints. Be suspicious of solder joints that appear to have excessive solder, too little solder, or dull and uneven color.

5.1.1 PREVENTIVE MAINTENANCE

The transceiver should be put on a regular maintenance schedule and an accurate record of its performance should be maintained. Important checks are receiver signal-to-noise and transmitter power output and frequency. Use the performance tests in the alignment section as guides.

5.1.2 SOLDERING PRACTICES

The same basic soldering practices used on other printed circuit boards can be used on the Messenger 122 and 123A printed circuit board. Avoid using small wattage soldering irons and apply the amount of heat that will cause the solder to flow quickly. No soldering iron smaller than 47 watts should be used. Use desoldering devices such as a solder sipper or solder wick to remove solder from the printed circuit board.

5.1.3 COMPONENTS LAYOUT

A components layout sheet is located at the back of this service manual. The view is from the bottom of the printed circuit board and is printed on a transparent page. It can be referenced to the actual printed circuit board when locating components, measuring voltages and performing signal injections.

5.1.4 REPLACEMENT PARTS LIST

A replacement parts list has been included at the back of this service manual. The parts are listed in alphabetical and numerical order for ease of location.

The transistors used in this transceiver are specially selected for specific parameters and are listed with E. F. Johnson part numbers. To obtain peak transceiver performance, replacement transistors should be the type listed in the parts list section.

5.1.5 OSCILLOSCOPE WAVEFORMS

When servicing the audio section, it is recommended that an oscilloscope be used to isolate defective components.

5.2 TRANSISTOR TROUBLESHOOTING

5.2.1 GENERAL

The following information is intended to aid troubleshooting through the isolation or elimination of transistor malfunctions.

It should be pointed out that a transistor which checks good, even with an expensive tester, might not function properly in the circuit. Transistor substitution should then be the final judge of transistor condition. However, because of the excellent history of transistor reliability, don't substitute a transistor before being certain that other components are not causing the problem.

Transistor lead placement is not always consistent. Therefore, transistor base diagrams should be consulted when there is doubt.

5.2.2 TRANSISTOR OPERATING CHARACTERISTICS

For all practical purposes the transistor base-emitter junction and the transistor base-collector junction can be considered to be diodes. For the transistor to conduct, its base-emitter junction must be forward biased in the same manner as a conventional diode. In a germanium transistor the typical forward biased junction voltage is 0.2 to 0.4 volts. A typical silicon transistor will have a forward biased junction voltage of 0.5 to 0.7 volts. When collector current is high the base-emitter voltage of both germanium and silicon transistors increases from 0.1 to 0.2 volts. The base-emitter bias voltage in the forward biased condition is then 0.4 to 0.5 volts for a germanium transistor and 0.7 to 0.9 volts for a silicon transistor. High current silicon transistors may go up to 2 volts under load.

5.2.3 IN-CIRCUIT TRANSISTOR TESTING

An in-circuit transistor tester should be used if one is available. If one is not available, an in-circuit transistor test can be performed using a sensitive voltmeter, a soldering aid and, sometimes, a 100 ohm resistor.

Refer to Figure 5-1 for the correct voltmeter connections and proceed with the following tests:

1. Measure the emitter voltage. Compare your measurement to the voltage listed on the schematic diagram. A correct emitter voltage reading generally indicates that the transistor is working properly. If you are in doubt as to the condition of the transistor after measuring the emitter voltage, proceed with the following test.

2. Measure the base-emitter junction bias. The voltage measured across a forward biased junction should be approximately 0.3 volts for a germanium transistor and 0.6 volts for a small signal silicon transistor.

3. Check for amplifier action by shorting the base to the emitter with a soldering aid while monitoring the collector voltage.* The transistor should cut off (not conduct emitter to collector) because the base-emitter bias is removed. The collector voltage should rise to near the supply level. Any difference is the result of leakage current through the transistor. Generally, the smaller the leakage current the better the transistor. If no change occurs in the collector voltage when the base-emitter junction is shorted the transistor should be removed from the circuit and checked with an ohmmeter or a transistor tester.

4. Use a 100 ohm load resistor if the collector DC resistance is too low to develop much DC voltage. This 100 ohm value does not affect the stage characteristics and by measuring the voltage developed across it, the collector current is indirectly measured.

CAUTION

Be careful when connecting test leads to in-circuit transistors. Operating transistors can be ruined by shorting the base to the collector and, in some circuit configurations, the emitter to ground.

*Not recommended for high level stages under driving conditions.

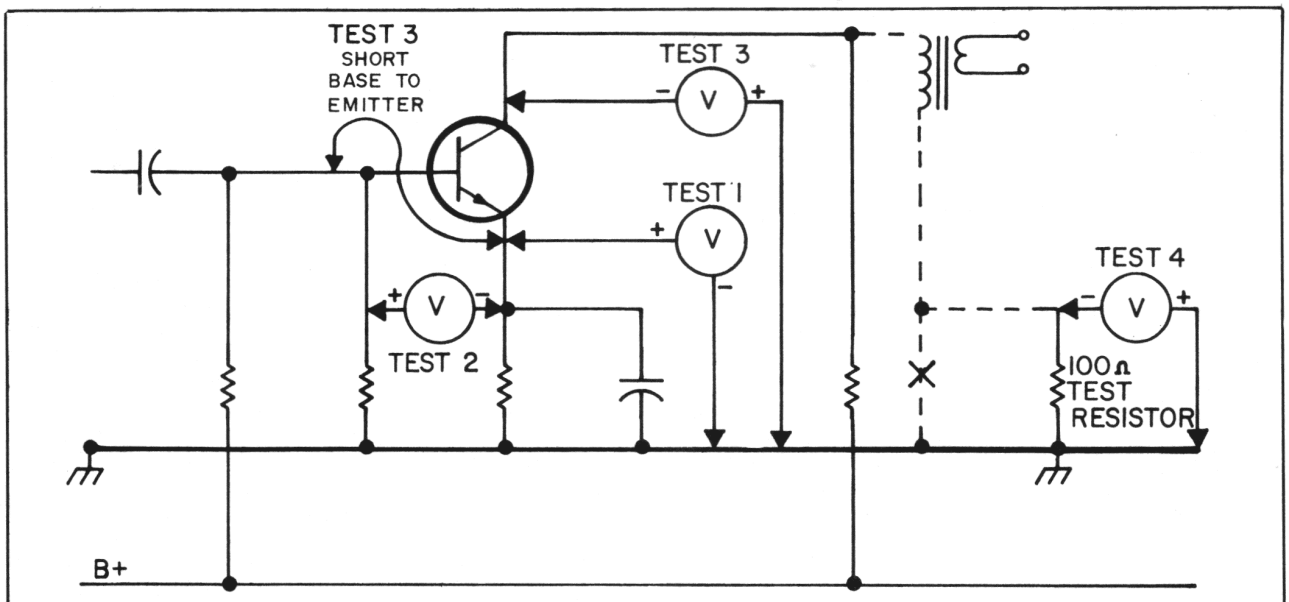

IN CIRCUIT TRANSISTOR TESTING
FIGURE 5-1

5.2.4 OHMMETER REQUIREMENTS FOR OUT OF CIRCUIT TRANSISTOR TESTING

Only high quality ohmmeters should be used to measure the resistance of transistors. Many ohmmeters of both VOM and electronic types have short circuit current capabilities in their lower ranges that can be damaging to semiconductor devices. A good "rule of thumb" is to never measure the resistance of a semiconductor on any ohmmeter range that produces more than 3 milliamperes of short circuit current. Also, it is not advisable to use an ohmmeter that has an open circuit voltage of more than 1.5 volts.

The following steps should be performed to determine the ohmmeter short circuit current:

1. When the ohmmeter test probes are shorted together (measuring the forward resistance of a diode or the base-emitter junction of a transistor amounts to the same thing) the meter deflects full scale and the entire battery voltage appears across a resistance that we will designate as R1. The current through the probes is the battery voltage divided by the resistance of R1. A very easy method is available for determining the value of R1. Look at the exact center of the ohmmeter scale. Your reading is the value of R1 on the Rx1 range.

2. The only other unknown required to calculate the short circuit current of an ohmmeter is the internal battery voltage. Let's take a well known meter that has a center scale reading on the ohms scale of 4.62 and a battery voltage of 1.5 volts. Its short circuit current can be calculated by using Ohm's Law. Dividing 1.5 volts by 4.62 ohms equals a short circuit current of 324 mA on the Rx1 range. Obviously, the Rx1 range of this meter cannot be used to measure the resistance of semiconductors. When the value of R1 is known for the Rx1 it can then be determined for any range by multiplying R1 by the multiplier value of the range. The value of R1 for the Rx10 range of a meter with an R1 value on the Rx1 range of 4.62 ohms is 4.62 x 10 or 46.2 ohms. The short circuit current on the Rx10 range can then be calculated: 1.5 volts divided by 46.2 ohms equals 32.5 mA. By using this method, the lowest safe range for measuring semiconductor resistance may be determined for any ohmmeter.

   Remember that you should not measure any semiconductor resistance on any ohmmeter range which produces more than three milliamperes of short circuit current.

5.2.5 OUT OF CIRCUIT TRANSISTOR TESTING

Turn the transceiver voltage off, disconnect at least two of the three element leads on the suspected defective transistor and refer to Figure 5-2.

Polarities shown in Figure 5-2 are for NPN transistor types. For PNP transistor types, reverse the meter lead polarity.

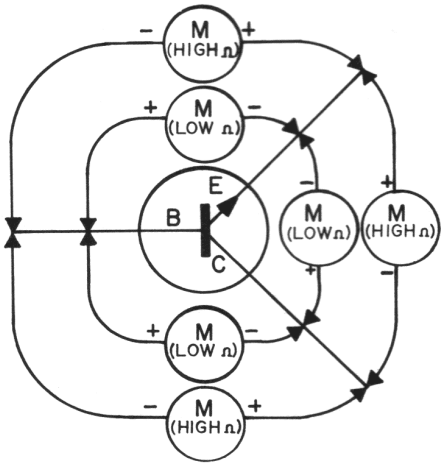

OUT OF CIRCUIT TRANSISTOR RESISTANCE MEASUREMENTS
FIGURE 5-2

Note: Germanium transistor information is included for reference only.

Silicon

Connect the negative meter lead to the emitter and the positive lead to the base. Approximately 500 to 2K ohms should be measured. Move the positive meter lead to the collector. Approximately 25K to infinity should be measured. If the emitter to base reading is near zero or infinity, the transistor can be considered defective. If the emitter to collector reading is near zero, the transistor can be considered defective. It is sometimes difficult to determine if an open exists from emitter to collector, since normal readings are near infinity.

Small Signal Germanium (PNP)

Connect the positive meter lead to the emitter and the negative lead to the base. Approximately 300 to 400 ohms should be measured. Move the negative meter lead to the collector. Approximately 5K to 50K ohms should be measured. If either meter reading is near zero or infinity, the transistor can be considered defective.

Power Germanium (PNP)

Connect the positive meter lead to the emitter and the negative lead to the base. Approximately 20 to 50 ohms should be measured. Move the negative meter lead to the collector. Approximately 30 to 500 ohms should be measured. If either meter reading is near zero or infinity, the transistor can be considered defective.

5.3 RECEIVER TROUBLESHOOTING

5.3.1 RECEIVER CURRENT DRAIN

a. Connect a 1.5 ampere current meter in series with the positive voltage lead.

b. Set the volume control for maximum volume and the squelch control for minimum squelch.

c. Check the total receiver current drain.

   1. Typical receiver current drain should measure approximately 400 mA with no signal input.

5.3.2 RECEIVER OVERALL GAIN TEST

a. The relative receiver condition can be quickly checked by performing a receiver overall gain test.

b. Proceed as follows to perform a receiver overall gain test:

   1. Connect the RF signal generator to the antenna connector through a 6dB pad. Set the RF signal generator output for 1 μV, modulated with 1 kHz at 30%.

   2. Set the RF signal generator frequency for 27.085 MHz (channel 11) and the transceiver volume control full on with channel 11 selected.

3. With an audio voltmeter connected across the speaker terminals, a voltmeter indication of at least 0.775 volts (0 dB) should be indicated. A typical reading of +12 dB is common.

4. If the preceding test indicates problems, use the following information to systematically troubleshoot the receiver.

5.3.3 OSCILLATOR, MIXER AND CERAMIC FILTER

a. Measure the RF injection voltage at the base and emitter of Q14 in both receive and transmit condition.

1. A typical reading of approximately 0.3 VRF should be measured at Q14 base.

2. A typical reading of approximately 0.8 VRF should be measured at Q14 emitter.

b. Measure the synthesizer mixer output in both receive and transmit condition.

1. In the receive condition, a typical reading of approximately 0.07 VRF should be measured at Q2 base.

2. In the transmit condition, a typical reading of approximately 0.36 VRF should be measured at Q15 base.

c. The condition of ceramic filter Z1 can be checked by connecting a 455 kHz signal to the base of Q2 and monitoring the response curve after detector diode CR4 with an oscilloscope.

1. Be sure to carefully check associated components before substituting Z1.

2. Ceramic filter Z1 normally does not require realignment when replaced. If alignment is necessary, do so while monitoring the response curve.

5.3.4 AUTOMATIC GAIN CONTROL (AGC)

a. Receiver performance can be evaluated by checking AGC characteristics and levels.

1. Refer to receiver test setup, Figure 6-2, in the alignment section.

2. Set the RF signal generator output for 1000 μV on 27.085 MHz (channel 11), modulated with 1 kHz at 30%.

3. Set the transceiver to channel 11 and adjust the volume control for a 0 dB audio VTVM indication.

4. Reduce the RF signal generator output to 1 μV. The audio VTVM should drop 15 dB ±2 dB. If this requirement is not met, adjust R7 and repeat steps 3 and 4.

5. If the audio reading still does not meet the preceding requirement, proceed with AGC troubleshooting.

b. AGC Troubleshooting

1. Measure the no signal input AGC-1 voltage at the junction of R9 and C12. The reading should be approximately 0.9 V.

2. Measure the no signal input AGC-2 voltage at the cathode of CR2. The reading should be approximately 1.6 V.

3. Increase the RF signal generator output from 1 μV to 100,000 μV while observing the audio output meter indication. Refer to Table 5-1 for typical AGC levels.

4. Isolate the AGC circuitry from the squelch stage by disconnecting the interconnecting lead from squelch control R7. This will separate squelch problems from defective AGC indications.

5. If the audio output meter indication does not follow the general trend of the data shown in Table 5-1, check CR3, Q1 and associated circuitry.

TABLE 5-1
TYPICAL AGC LEVELS

RF Input to 6 dB pad (In Microvolts)	Relative Audio Output (In dB)
1	-16.0
3	- 8.5
10	- 4.6
30	- 2.5
100	- 1.3
300	- 0.9
1,000	- 0.8
3,000	- 0.9
10,000	- 1.1
30,000	- 0 (+10 dB ref)
100,000	+ 3.0

Test Conditions: Connect the RF signal generator through a 6 dB pad to the transceiver antenna connector, and set the frequency to 27.085 MHz. (channel 11), modulated with 1 kHz at 30%.

Set the volume control for a 10 dB reference level as measured across the speaker terminal with a 30,000 μV RF signal generator input.

TABLE 5-2
TYPICAL RECEIVER SIGNAL LEVELS

Test Point	Input Frequency	Input Voltage Level to 6 dB Pad
Antenna Connector	27.105 MHz	1.0 μV
Q1 Base	27.105 MHz	1.7 μV
Q1 Collector	27.105 MHz	19.0 μV
Q2 Base	27.105 MHz	16.0 μV
Q2 Collector	455 kHz	2.4 mV
Q3 Base	455 kHz	0.4 mV
Q3 Collector	455 kHz	4.5 mV
Q4 Base	455 kHz	2.2 mV
Q4 Collector	455 kHz	340.0 mV
CR4 Anode	1 kHz	95.0 mV
CR5 Cathode	1 kHz	9.5 mV
C16 (vol. side)	1 kHz	8.9 mV
CR6 Cathode	1 kHz	0.6 mV
Q9 Base	1 kHz	0.3 mV
Q9 Collector	1 kHz	4.7 mV
Q10 Base	1 kHz	4.8 mV
Q10 Collector	1 kHz	400.0 mV
Q11, Q12 Base	1 kHz	350.0 mV

Test Conditions: Set the volume control for a 0 dB audio output with 1 μV into 6 dB pad RF input. Set the squelch control for minimum squelch.

Connect the RF and audio signal generators through a 1.0 μF capacitor to the listed test points, and set the generator output levels for a 0 dB reference level as measured across the speaker terminals.

Modulate the RF signal generator with a 1 kHz tone at 30% modulation.

5.3.5 RF AND IF STAGES

Proper RF and IF stage operation can be quickly checked by injecting calibrated signals at various points and measuring for a reference output voltage level (signal injection method).

a. Refer to Table 5-2 for test conditions, test points, frequencies and voltage levels.

b. Connect the RF or IF signal generator through a 1.0 μF capacitor to indicated test points, and compare readings with those listed.

c. Half split troubleshoot.

1. First connect the generator to Q9 base. If there is audio output, work towards the receiver front end until the defective stage is isolated.

2. If there is no audio output, proceed with audio troubleshooting.

5.3.6 AUDIO TROUBLESHOOTING

a. Refer to Table 5-2 for test conditions, test points, frequency and voltage levels.

b. Connect the audio signal generator through a 1.0 μF capacitor to indicated test points, and compare readings with those listed.

c. First connect the generator to Q11 and Q12 collector. If there is audio output, work toward CR4 until the defective stage is isolated.

d. If audio distortion is apparent, use an oscilloscope to trace trouble to defective stage and component.

e. Severe audio distortion can be the result of an open Q11 or Q12. A shorted Q11 or Q12 can cause R42 to burn and possibly blow the line fuse.

5.3.7 SQUELCH

a. Squelch operation can be checked by performing a tight squelch test. Proceed as follows to perform this test:

1. Connect the RF signal generator to the antenna connector and adjust the squelch control full clockwise.

2. Set the RF signal generator to 30 μV, modulated with 1 kHz at 30% (channel 11 frequency). Squelch should not open.

3. Set the RF signal generator to 3000 μV. The squelch should open, allowing audio output to be heard.

4. If the preceeding requirements are not met, proceed with squelch troubleshooting.

b. Squelch Troubleshooting

1. Measure the emitter voltage of audio amplifier Q9 while adjusting the squelch control from minimum to maximum squelch. The voltage indication should go from approximately +2.9 to 5.3 VDC.

2. Since squelch gate Q7 receives its control voltage from the amplified AGC line (AGC2), the AGC circuitry should be checked before proceeding with squelch troubleshooting.

3. After determining that the AGC circuitry is not defective, check squelch gate Q7, squelch amplifier Q8, squelch diode CR9 and associated circuitry.

4. Measure Q7 and Q8 DC voltages and compare with those indicated on the schematic.

5.3.8 NOISE LIMITER

The noise limiter condition should be checked by using signal injections and resistance measurements.

1. If signal injections indicate a defective noise limiter circuit, unsolder CR5 and substitute with a known good diode. Check associated components.

2. The front-to-back resistance ratio should measure approximately 1:10 for a typical noise limiter diode.

5.4 TRANSMITTER TROUBLESHOOTING

Refer to the alignment section for test setup details, and Table 5-3 for typical transmitter RF voltage readings.

5.4.1 TRANSMITTER CURRENT DRAIN

a. Connect a current meter in series with the positive voltage lead and key the transmitter.

b. Normal current drain should measure between approximately 970 mA with 3.8 watts power output, no modulation, or 1.2 A maximum with full modulation.

5.4.2 OSCILLATOR, PREDRIVER AND DRIVER

a. Refer to section 5.3.3 for oscillator injection voltage readings. If the injection voltages are abnormal, check the appropriate crystals (as referenced on the schematic synthesizer scheme) and other associated components.

b. Measure the predriver (Q15) collector RF voltage. A typical reading of approximately 4.5 VRF should be measured.

c. Measure driver Q16 base and collector RF voltages. A typical reading of approximately 2.0 VRF and 8.0 VRF should be measured.

d. If stage RF voltage readings are abnormal, measure the DC voltages and compare with those listed on the schematic.

5.4.3 POWER AMPLIFIER, ANTENNA SWITCHING DIODE AND LOW PASS FILTER

a. Measure power amplifier Q17 base and collector RF voltages. A typical reading of approximately 1.8 VRF and 12.8 VRF should be measured.

b. Measure the RF voltage across R68. A typical reading of approximately 13.5 VRF should be measured.

1. If no RF voltage is developed across R68, check antenna switching diode CR16.

2. Check low pass filter tuning (L6-L7), and check associated components.

5.4.4 MODULATOR AND AUDIO COMPRESSOR

a. Couple an oscilloscope pickup loop to L7. Refer to Figure 5-4 for pickup loop fabrication and oscilloscope connection.

b. Key the transmitter and observe the unmodulated RF carrier oscilloscope waveform. The waveform should be free from noise. Refer to Figure 5-3 (1) for normal waveform.

1. If noise is riding on top of the waveform, check for a noisy Q9 or Q10 and other associated defective components. Refer to Figure 5-3 (2) for noisy RF carrier waveform.

TABLE 5-3
TYPICAL TRANSMITTER RF VOLTAGE READINGS

Test Point	RF Voltage Reading
Q15 Collector	4.5 VRF
Q16 Base	2.0 VRF
Q16 Collector	8.0 VRF
Q17 Base	1.8 VRF
Q17 Collector	12.8 VRF
Antenna Connector	15.4 VRF

Test Conditions:
RF voltage readings were measured with a Boonton 91C RF voltmeter using a 100:1 RF probe.

Measurements were made on an unmodulated transmitter which had an RF power output of 3.7 watts.

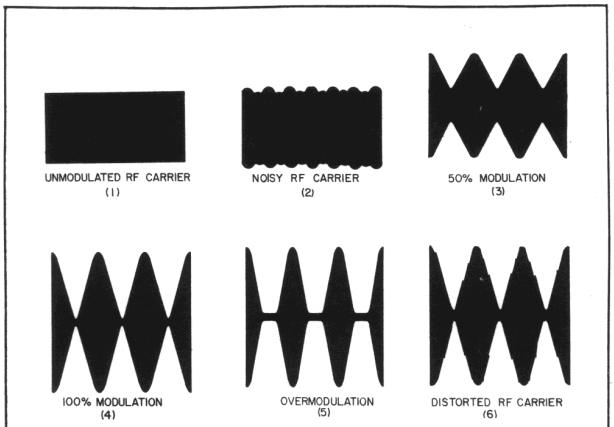

TRANSMITTER RF WAVEFORMS
FIGURE 5-3

c. Connect the audio generator through a 6800 pF capacitor to the base of Q9.

1. Set the audio generator frequency to 1 kHz and the output level to 10 mV (-38 dB). The oscilloscope should indicate at least 50% modulation. Refer to Figure 5-3 (3) for normal waveform.

2. Increase the audio generator output level to 63 mV (-22 dB). The oscilloscope should indicate not less than 80% and not more than 100% modulation on negative and positive peaks. Refer to Figure 5-3 (4) for 100% modulation oscilloscope waveform.

d. Check for modulation waveform distortion and correct if present.

1. When the audio compressor is functioning properly, the transmitter cannot be overmodulated with a 1 kHz microphone input. If upward or downward overmodulation is apparent, suspect audio compressor trouble. Refer to Figure 5-3 (5) for overmodulation waveform.

2. Check C32, CR11, C29 and associated components.

3. The waveform should be clean and free of RF distortion. If RF distortion is present, try to eliminate by retuning the transmitter, then check C68, C69, C71 and C72. Refer to Figure 5-3 (6) for distorted RF carrier waveform.

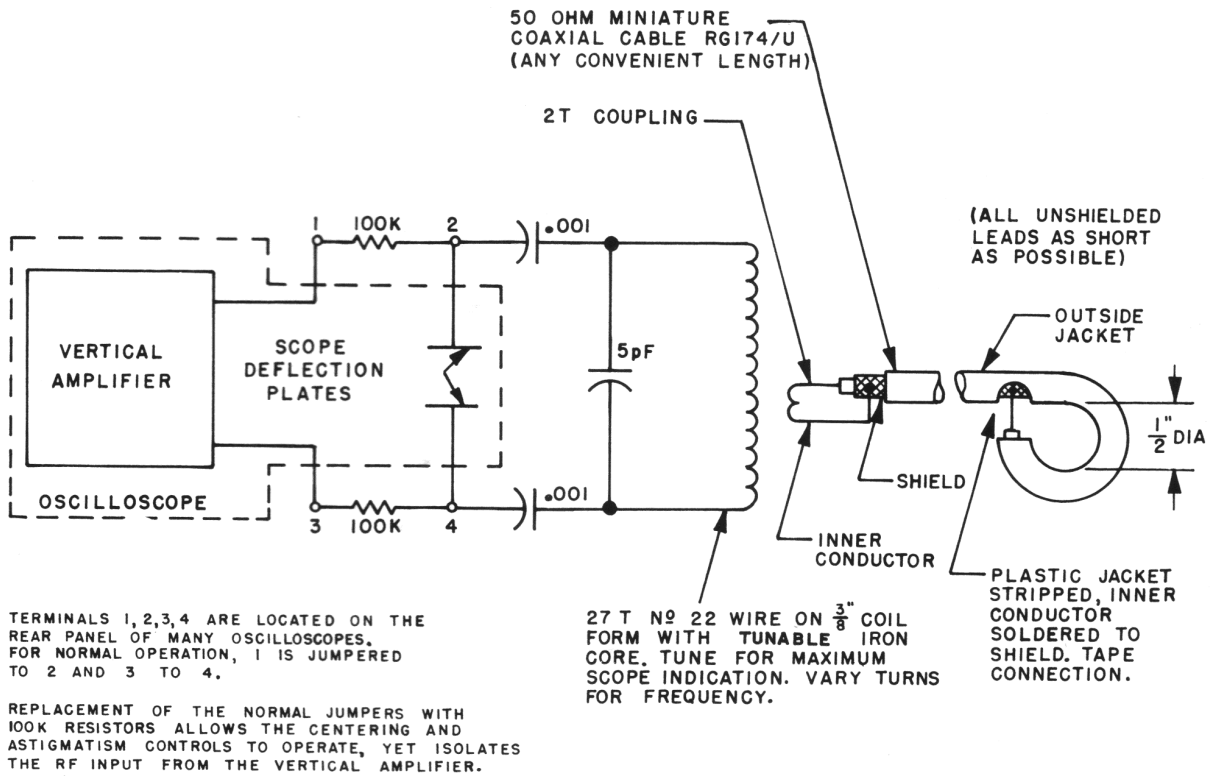

OSCILLOSCOPE RF PICK-UP LOOP FABRICATION AND METHOD OF CONNECTION

FIGURE 5-4

5.5 FREQUENCY SYNTHESIZER

The following information including Tables 5-4, 5-5 and 5-6 should be helpful in isolating frequency synthesizer troubles.

a. Connect the RF voltmeter probe to the CR14-CR15 junction, and check each channel for crystal starting and uniform injection voltage levels.

b. Couple an unmodulated transmitter power output sample to a frequency meter or electronic counter.

c. Measure the frequency of channels 1, 6, 11, 16, 20 and 23. Refer to Table 5-5 for transmitter channel frequency limits.

d. If the synthesizer fails to meet the limits listed in Table 5-5, refer to Table 5-4, 5-6 and proceed with frequency synthesizer trouble isolation.

TABLE 5-4
FREQUENCY SYNTHESIZER TROUBLE ANALYSIS

Trouble	Probable Cause
Receiver and transmitter completely inoperative. No apparent synthesizer output.	Synthesizer mixer Q14
Receiver completely inoperative.	CR8 or CR14
Transmitter inoperative.	CR7 or CR15
Transceiver operation intermittent.	Dirty selector switch.
Transceiver inoperative on some channels, operates normally on others.	Defective crystal. Refer to Table 5-8.

TABLE 5-5
TRANSMITTER CHANNEL FREQUENCY LIMITS
(at +25°C - 72°F)

CHANNEL NO.	FREQUENCY, kHz	+0.004% HIGH LIMIT, kHz	-0.004% LOW LIMIT, kHz
1	26,965.000	26,966.079	26,963.921
6	27,025.000	27,026.081	27,023.919
11	27,085.000	27,086.083	27,083.917
16	27,155.000	27,156.086	27,153.914
20	27,205.000	27,206.088	27,203.912
23	27,255.000	27,256.090	27,253.910

TABLE 5-6
FREQUENCY SYNTHESIZER CRYSTAL TROUBLE ANALYSIS

Channels Inoperative	Receive Inoperative	Transmit Inoperative	Faulty Crystal
1, 2, 3 and 4	X	X	Y9
5, 6, 7 and 8	X	X	Y10
9, 10, 11 and 12	X	X	Y11
13, 14, 15 and 16	X	X	Y12
17, 18, 19 and 20	X	X	Y13
21, 22 and 23	X	X	Y14
1, 5, 9, 13, 17 and 21	X		Y5
2, 6, 10, 14, 18 and 22	X		Y6
3, 7, 11, 15 and 19	X		Y7
4, 8, 12, 16, 20, 23	X		Y8
1, 5, 9, 13, 17 and 21		X	Y1
2, 6, 10, 14, 18 and 22		X	Y2
3, 7, 11, 15, 19		X	Y3
4, 8, 12, 16, 20 and 23		X	Y4

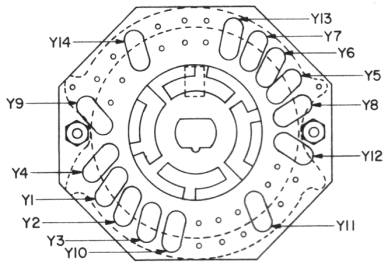

MESSENGER 123A
CRYSTAL SWITCH LAYOUT
FIGURE 5-5

5.6 AC POWER SUPPLY

AC Power Supply, Part No. 239-0125-001, is a regulated 13.8 VDC power source used for base installations.

CIRCUIT DESCRIPTION

The approximately 15 VDC output from the bridge rectifier, D101 through D104, is connected to the series regulator, Q101, and the emitter follower, Q102. A sample of the DC output voltage from Q101 is fed back to the base of the voltage amplifier, Q103, by R105. Regulation of the output voltage is accomplished by comparing this feedback voltage to the emitter voltage of Q103. The emitter of Q103 is fixed by the reference zener diode, DZ106, at 10 volts. The difference voltage between the output and reference source is amplified by Q103 and it is fed back to Q101 and Q102, effectively biasing for more or less DC voltage output. The regulator output voltage is adjusted by R105 and it is factory adjusted for 13.8 VDC output in receive condition. Power supply circuit protection is provided by a 0.3 ampere fuse connected in the primary winding of the power transformer, T101. A shorted output or continuous overload of approximately 1.5 ampere will open this fuse.

AC POWER SUPPLY SERVICING

For ease of power supply servicing, a dummy load can be constructed to replace the transceiver. Seven, 2-watt 100 ohm resistors connected in parallel across B+ and ground will simulate transmit conditions. Two, 2-watt 100 ohm resistors connected in parallel across B+ and ground will simulate receive conditions.

a. When trouble has been isolated to the power supply, refer to Table 5-7 for troubleshooting tips.

CAUTION

If the cover assembly and mounting bracket for Q101 are removed for trouble analysis, do not allow Q101 case to touch the power supply chassis, as permanent transistor damage can result.

b. If any components are replaced, be sure to check and adjust R105 for 13.8 VDC output to the dummy load or transceiver in receive condition.

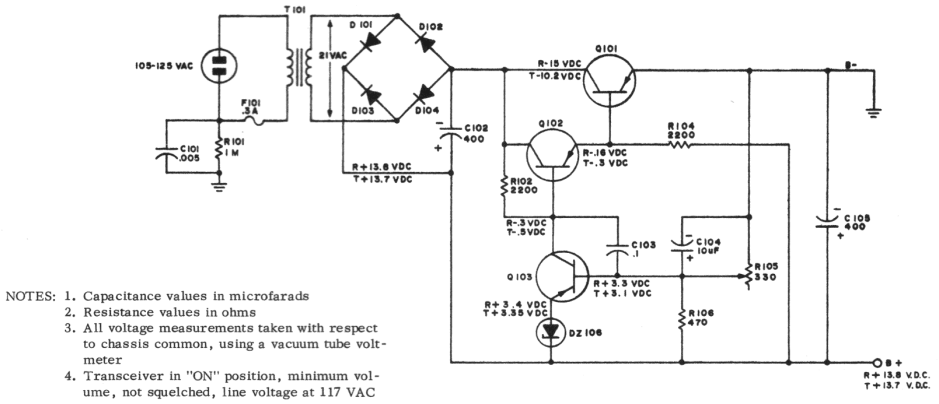

NOTES:
1. Capacitance values in microfarads
2. Resistance values in ohms
3. All voltage measurements taken with respect to chassis common, using a vacuum tube voltmeter
4. Transceiver in "ON" position, minimum volume, not squelched, line voltage at 117 VAC

AC POWER SUPPLY SCHEMATIC

TABLE 5-7

POWER SUPPLY TROUBLESHOOTING

TROUBLE	PROBABLE CAUSE	CHECK
Abnormal transceiver operation	High power supply B+ output voltage	a. Check the B+ output voltage. b. Check Q101, Q102 and Q103 DC bias voltages. Refer to the schematic for typical voltage readings.
Power Supply inoperative	0.3 ampere fuse blown	a. Check and replace the fuse as necessary. b. Check the transceiver for B+ short before reconnecting the power supply.
Power Supply continues to blow fuse	Defective transistor or filter capacitor	a. Check the power supply resistance readings. b. Check C105.
R105 will not adjust to 13.8 VDC	Defective D106, R105 or Q103	a. Check D106, R105 and Q103. b. Remove and replace the defective component.

SECTION 6
ALIGNMENT

6.1 GENERAL

Use care and the proper alignment tools when adjusting various transformers to prevent core damage.

Refer to Figure 6-1 for the required alignment tools and to Figure 6-7 for alignment point locations.

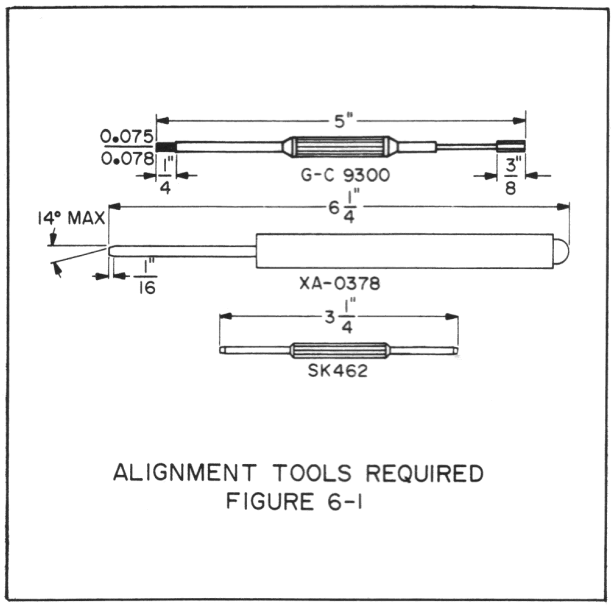

ALIGNMENT TOOLS REQUIRED
FIGURE 6-1

6.2 RECEIVER ALIGNMENT

NOTE

Low pass filter adjustments L6 and L7 should be peaked for maximum power output before the receiver is aligned. Refer to the transmitter tuneup section for details.

CONNECTIONS AND SETTINGS

a. Connect the test setup as shown in Figure 6-2.

b. Turn the transceiver on and set the squelch control maximum CCW.

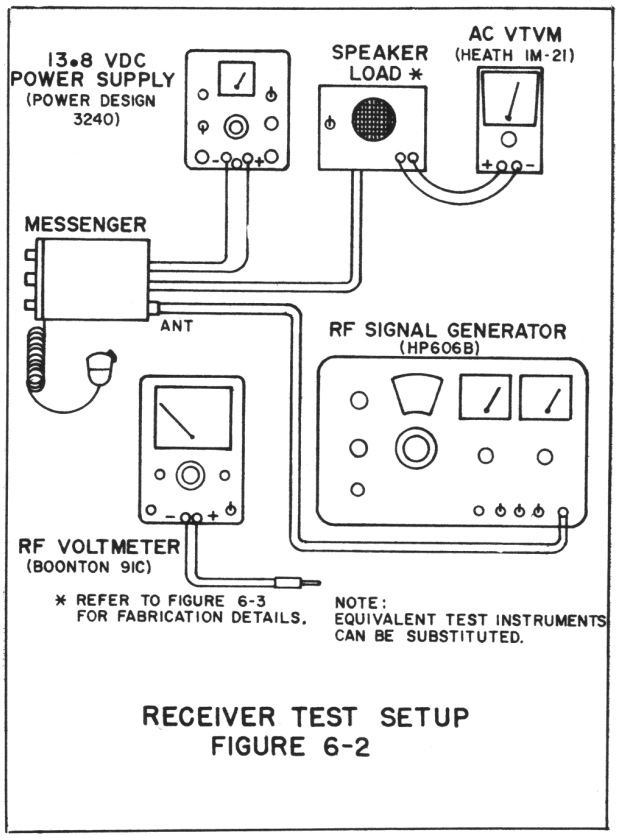

RECEIVER TEST SETUP
FIGURE 6-2

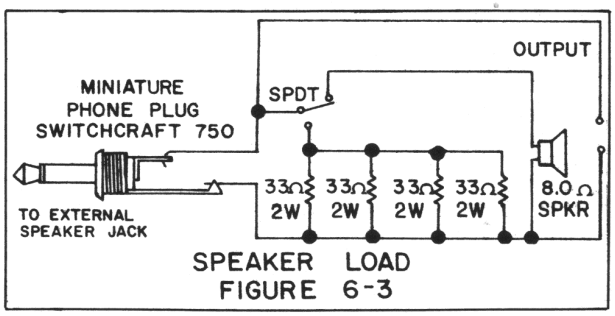

SPEAKER LOAD
FIGURE 6-3

FREQUENCY SYNTHESIZER

a. High Frequency Oscillator Adjustment

1. Set the channel selector switch to channel 23 and connect the RF voltmeter to the CR14-CR15 junction.

2. Adjust T7 1/8 turn beyond the peak RF voltage reading point. A typical reading of approximately 0.4 VRF should be measured.

b. Synthesizer Mixer Adjustment

1. Set the channel selector switch to channel 12 and connect the RF voltmeter probe to the case of Q15.

2. Key the transmitter into an RF load and adjust T8, T9, T10 and T11 for a maximum meter reading. A typical reading of approximately 0.28 VRF should be measured.

RF AND IF SECTION (CHANNEL PEAKING METHOD)

a. RF Adjustment

1. Set the channel selector switch to channel 12 and connect a 1 kHz, 30% modulated RF signal to the antenna connector.

2. Adjust T1 and T2 for a maximum audio output while keeping the RF signal generator output at a minimum.

b. IF Adjustment

1. Test setup same as a. 1.

2. Adjust T3 and T4 for a maximum audio output while keeping the RF signal generator output at a minimum.

NOTE

Do not adjust ceramic filter Z1 using this method.

3. Set the RF signal generator output level to 1 μV, modulated 30% at 1 kHz.

4. Readjust T1, T2, T3 and T4 for a maximum audio output and make final adjustment of T1 for best signal to noise ratio.

RF AND IF SECTION (455 kHz GENERATOR METHOD)

a. IF Adjustment

1. Connect a 455 kHz signal generator through a 22 μF coupling capacitor to the base of Q2.

2. Adjust T3 and T4 for a maximum audio voltmeter indication while reducing the generator output level (an excessive generator output level will cause improper IF amplifier alignment).

b. RF Adjustment

1. Remove the 455 kHz signal generator and connect the RF signal generator to the antenna connector. Set the generator output to 1 μV, modulated 30% at 1 kHz on channel 12 frequency.

2. Adjust T1 and T2 for maximum audio output and make final adjustment of T1 for best signal to noise ratio.

NOTE

The crystal or ceramic filter, Z1, does not normally require realignment. However, if the receiver response curve indicates that ceramic filter alignment is necessary, do so with a sweep generator while monitoring the receiver response curve.

METER

With no signal input, adjust meter zero potentiometer R81 for a zero meter reading.

RECEIVER PERFORMANCE TESTS

a. Perform an AGC roll-off test as follows:

1. Set the RF signal generator to the channel frequency and the output level to 1000 μV, modulated 30% at 1 kHz.

2. Adjust the receiver volume control for a 0 dB meter indication, and then set the RF signal generator output level to 1 μV.

3. The audio voltmeter indication should drop a minimum of 13 dB and a maximum of +17 dB.

4. Adjust IF gain control R7 as necessary and repeat steps 1, 2 and 3.

b. Perform a signal plus noise to noise ratio and audio output test as follows:

1. Set the RF signal generator to the channel frequency and the output level to 1 μV, modulated 30% at 1 kHz.

2. Increase the receiver volume control to maximum. The audio voltmeter should indicate at least 0 dB (+10 dB typical).

3. Readjust the receiver volume control for a 0 dB meter indication, then turn the RF signal generator modulation off.

4. The audio voltmeter indication should drop 8 dB or more.

c. Perform the squelch test as follows:

1. Set the RF signal generator to the channel frequency and the output level to 60 μV, modulated 30% at 1 kHz.

2. Adjust the receiver squelch control for maximum squelch. The receiver audio output should squelch off.

3. Reset the RF signal generator output level to 2000 μV. The receiver audio output should become audible.

d. Perform the meter test as follows:

Set the RF signal generator to the channel frequency and the output level to 100 μV (into a 6 dB pad). The meter should indicate between S8 and 10 dB over S9.

6.3 TRANSMITTER TUNEUP

CONNECTIONS AND SETTINGS

a. Connect the test setup as shown in Figure 6-4.

b. Turn the transceiver on and key the transmitter into a 50 ohm load.

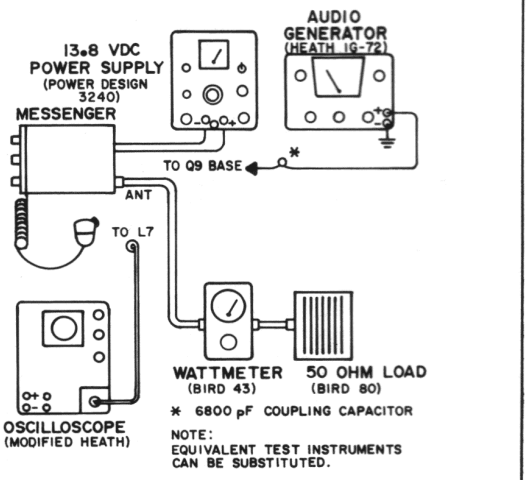

TRANSMITTER TEST SETUP
FIGURE 6-4

PREDRIVER AND POWER AMPLIFIER AND FILTER

a. Predriver

1. Tune T12 and T13 for maximum power output.

2. Tune T10 and T11 for maximum power output.

b. Power Amplifier

1. Tune L6 and L7 for a power output between 2.8 and 3.8 watts.

2. Tune L6 for minimum transmitter current while maintaining a power output between 2.8 and 3.8 watts.

TABLE 6-1
CHANNEL FREQUENCIES

Channel	Frequency (MHz)	Channel	Frequency (MHz)
1	26.965	13	27.115
2	26.975	14	27.125
3	26.985	15	27.135
4	27.005	16	27.155
5	27.015	17	27.165
6	27.025	18	27.175
7	27.035	19	27.185
8	27.055	20	27.205
9	27.065	21	27.215
10	27.075	22	27.225
11	27.085	23	27.255
12	27.105		

Note:
FCC Regulations require all measured channel frequencies to be within ±0.005% from these listed channel center frequencies.

TRANSMITTER FREQUENCY CHECK

To check the transmitter frequency, proceed as follows:

1. Loop couple a frequency counter or meter to L7.

2. Refer to Table 6-1 for channel frequencies and replace crystals as necessary to maintain a channel frequency to tolerance of ±0.005%.

CRYSTAL STARTING AND MODULATION CHECK

a. Switch between channels 1 and 23 and check for normal crystal starting.

b. Check for normal waveform and percent of modulation.

1. Couple the oscilloscope RF pickup loop to L7.

2. Set the audio generator frequency to 1 kHz and couple a -33 dB audio input through a 6800 pF series capacitor to the base of Q9. The oscilloscope should indicate at least 50% modulation.

3. Increase the audio generator level to -17 dB. The oscilloscope should indicate not less than 80% or more than 100% modulation on both negative and positive peaks.

c. Check each channel for clean modulation and absence of oscillations.

1. Adjust T12 and T13 as necessary to eliminate modulation distortion.

d. Speak into the microphone and check for normal modulation.

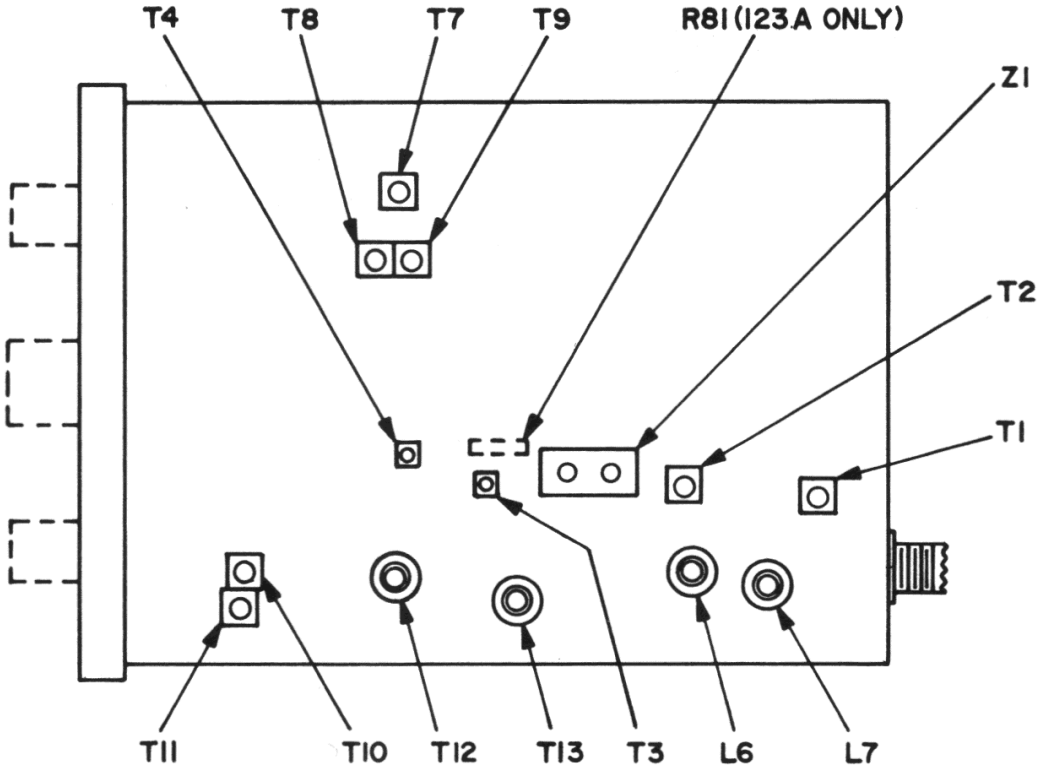

ALIGNMENT POINTS
(MESSENGER 122 & 123A)

SECTION 7
PARTS LIST

Component Codes

J = ±5%
K = ±10%
M = ±20%
Z = +80/-20%

SYMBOL NO.	DESCRIPTION		PART NO.
	ACCESSORY PACKAGE		
	123A instruction manual		002-0071-002
	Operating manual (122)		002-0122-001
	Installation instructions		004-2001-001
	Ground strap		017-1714-001
	Part 95 Rules		022-1635-001
	FCC Form 505		022-1636-001
	Battery cable		023-1652-001
	Fuse 2A 250V FB AGC		534-0003-024
	Inline fuse holder		534-1004-005
	Connector package		023-2209-001
	Connector, tap		515-9005-001
	Instruction envelope		559-4013-001
	Hardware envelope		023-2615-001
	Printed envelope		559-4019-001
	No. 20 white envelope		041-0413-000
	Microphone clip		537-9004-002
	Mike clip		537-9004-003
	M123A schematic		564-3001-011
	Reduced schematic (122)		564-3001-122
	SCR 4SH MTL PH NPS		575-9504-006
	Battery lead		597-0001-011
	FRONT PANEL ASSEMBLY (123A)		
	Front panel assembly		
	Includes:		
BK1	BKT switch support		017-0679-011
CH12	123 panel		015-0799-002
DS1	6.3V bulb		549-3001-007
DS2	Same as DS1		
M1	Meter		554-0015-002
MP10	Clip		016-1749-001
MP11	Dial		032-0154-101
MP12	Knob, squelch-volume		547-0008-001
MP13	Knob, channel selector		547-0008-005
NP14	123A overlay		559-2032-011
NP15	123 overlay		559-2033-001
R13	10KΩ 1/8 W SPST ON/OFF (M123A)		562-0016-004
R27	Potentiometer		562-0002-011
S2	Crystal switch assembly		583-2029-102
	(C and later models)		583-2029-103
	REAR PANEL ASSEMBLY (122)		
	Rear panel assembly		023-2919-003
	Includes:		
BK1	Mounting bracket		016-1816-002
CH8	Rear panel		017-1628-002
J2	Coax receptacle		142-0101-002
	BUSHING ASSEMBLY (122)		
	Bushing assembly		023-3167-001
	Includes:		
BK1	Plate switch		016-1950-001
MP102	Bushing switch		013-1372-001
MP103	Retainer bulb		016-1958-001
	BRACKETS		
BK1	Bracket, F Panel mtg.	(122)	016-1944-001
BK2	Same as BK1	(122)	
BK2	Dash mounting bracket	(123A)	017-1249-001
BK4	Dash mounting bracket	(122)	017-1249-001
BK5	Bracket, cabinet mtg.	(122)	016-1884-003
	CAPACITORS		
C1	1000 pF M 1KV Y5S disc		510-3261-102
C2	6.8 μF M 35V dipped		510-2045-689
C3	0.010 μF M 50V Y5U	(123A)	510-3202-103
C4	27 pF J 200V N150 ceramic		510-3216-270
C5	5.1 pF J 200V NPO ceramic		510-3213-519
C6	0.010 μF M 50V Y5U	(123A)	510-3202-103
C7	Same as C6		
C8	1 pF J 500V composition		510-9002-109
C9	Same as C8		
C10	4700 pF M 50V Y5U disc		510-3204-472
C11	150 pF J 100V 1DM15		510-0001-151
C12	6.8 μF M 35V dipped		510-2045-689
C13	0.010 μF M 50V Y5U		510-3202-103
C14	Same as C13		
C15	4700 pF M 50V Y5U disc		510-3204-472
C16	0.047 μF K 250V flatfoil		510-1003-473
C17	1.0 μF M 35V dipped		510-2045-109
C18	Same as C17		
C19	Same as C17		
C20	270 pF J 100V 1DM15	(122)	510-0001-271
C21	820 pF J 100V 1DM15		510-0001-821
C22	390 pF J 100V 1DM15		510-0001-391
C23	0.010 μF M 50V Y5U		510-3202-103
C24	Same as C23		
C25	100 μF 10V aluminum		510-4003-005
C26	47 μF 25V aluminum		510-4006-006
C27	2200 pF M 50V Y5U disc		510-3202-222
C28	22 μF M 15V tubular		510-2003-220
C29	6.8 μF M 35V dipped		510-2045-689
C30	4700 pF M 50V disc		510-3204-472
C31	6.8 μF M 35V dipped		510-2045-689
C32	1.0 μF M 250V flatfoil		510-1004-105
C33	150 μF 25V aluminum		510-4006-006
C34	56 μF M 6V tubular		510-2001-560
C35	0.022 μF M 50V Y5U		510-3202-223
C36	Same as C35		
C37	0.010 μF M 50V Y5U		510-3202-103
C38	220 μF 16V aluminum		510-4006-004
C39	1000 μF 16V aluminum		510-4006-005
C40	0.010 μF M 500V Y5U disc	(122)	510-3004-103
C40	0.010 μF M 50V Y5U disc	(123A)	510-3002-103
C41	0.010 μF M 50V Y5U		510-3202-103
C42	6.8 pF J 200V N750 ceramic		510-3220-689
C43	22 pF J 200V N150 ceramic		510-3216-220
C44	100 pF J 200V N150 ceramic		510-3216-101
C45	0.010 μF M 50V Y5U		510-3202-103
C46	Same as C45		
C47	0.010 μF M 16V Y5S disc		510-3010-103
C48	180 pF J 50V N750 disc		510-3020-181
C49	0.010 μF M 50V Y5U		510-3202-103
C51	1 pF J 500V composition		510-9002-109
C52	33 pF J 200V N150 ceramic		510-3216-330
C53	Same as C52		
C54	0.010 μF M 50V Y5U		510-3202-103
C55	220 μF 16V aluminum		510-4006-004
C56	0.010 μF M 50V Y5U		510-3202-103
C57	Same as C56		
C58	1 pF J 500V composition		510-9002-109

PARTS LIST (cont'd)

SYMBOL NO.	DESCRIPTION		PART NO.
C59	33 pF J 200V N150 ceramic		510-3216-330
C60	0.047 μF M 16V Y5S		510-3210-473
C61	33 pF J 200V N150 ceramic		510-3216-330
C62	1000 pF J 100V 1DM15		510-0001-102
C64	22 pF J 200V NPO ceramic		510-3213-220
C65	0.010 μF M 50V Y5U disc		510-3002-103
C66	12 pF J 200V N750 ceramic		510-3220-120
C67	1000 pF M 1KV Y5S disc		510-3261-102
C68	43 pF J 200V N150 ceramic	(122)	510-3216-430
C68	47 pF J 200V N150 ceramic	(123A)	510-3216-470
C69	4700 pF M 50V Y5U disc		510-3204-472
C70	0.047 μF M 16V Y5S		510-3210-473
C71	0.047 μF M 50V Y5U		510-3202-473
C72	1000 pF J 100V 1DM15		510-0001-102
C73	27 pF J 200V NPO ceramic		510-3213-270
C74	1000 pF M 1KV Y5S disc		510-3261-102
C75	100 pF J 200V N150 ceramic		510-3216-101
C76	300 pF J 100V 1DM15		510-0001-301
C77	330 pF J 100V 1DM15		510-0001-331
C78	4700 pF M 1.4KV Z5U		510-3001-472
C90	470 pF J 100V 1DM15		510-0001-471
C121	0.010 μF M 50V Y5U		510-3202-103
	CHASSIS		
CH1	Rail chassis	(123A)	017-1430-031
CH2	Plate	(122)	016-1949-002
CH2	Cabinet assembly	(123A)	023-2201-011
	Includes:		
	Captive nut		013-1003-002
	Cabinet		032-0270-001
CH3	Front panel	(122)	032-0330-001
CH4	Cabinet assembly	(122)	023-2920-001
CH5	Back plate,	(122)	017-1753-001
	DIODES		
CR1	1N67A 80V 30 mA germ.	(122)	523-1000-067
CR2	1N4148 silicon diode		523-1500-883
CR3	1N67A germanium diode		523-1500-067
CR4	Same as CR3		
CR5	1N4148 silicon diode		523-1500-883
CR6	1N881 silicon diode		523-1500-881
CR7	1N881 silicon diode	(122)	523-1000-881
CR7	1N881 silicon diode	(123A)	523-1500-881
CR8	1N881 silicon diode	(122)	523-1000-881
CR8	1N881 silicon	(123A)	523-1500-881
CR9	1N67A germanium diode		523-1500-067
CR10	10V J 1W zener		523-2503-100
CR11	1N4148 silicon diode		523-1500-883
CR12	1N4003 200V 1A rect.		523-0501-002
CR13	10V J 1W zener	(122)	523-2003-100
CR13	10V J 1W zener	(123A)	523-2503-100
CR14	1N4148 silicon diode		523-1500-883
CR15	Same as CR14		
CR16	1N881 silicon diode		523-1500-881
CR17	1N4148 silicon diode	(123A)	523-1500-883
	PILOT LAMP		
DS2	1705D 14.0V 0.08A clear	(122)	549-3001-011
	ELECTRICAL PARTS		
EP3	0.14 x 0.13 ferrite bead		517-2002-001
EP4	Ferrite bead		515-4101-001
EP12	Insulator	(122)	018-0817-025
EP13	Insulator bulb bracket	(122)	018-0989-001
EP40	Black ext. plas. tubing	(122)	042-0240-770
EP42	Black varnished tubing	(122)	042-0240-500
EP46	Black ext. plas. tubing		042-0240-770
EP47	Same as EP46		
EP48	0.14 x 0.24 ferrite bead		517-2002-002
EP48	Black varnished tubing	(122)	042-0240-500
EP49	Same as EP48		
EP50	Same as EP48		
EP51	Same as EP48		
EP51	Black ext. plas. tubing	(123A)	042-0240-770
	JACKS		
J1	CC tini-jax NTT312		515-2001-001
J2	Coax receptacle	(123A)	142-0101-002
J3	Terminal bushing, red		515-4100-001
	INDUCTORS		
L2	20 mH audio choke		542-8001-011
L3	20 μH choke		542-3002-002
L4	13 μH choke	(122)	542-3003-001
L5	13 μH choke		542-3003-001
L6	10 1/2 T ind. 0.75-1.0 μH		542-1005-010
L7	4 1/2 T ind. 0.24-0.32 μH		542-1005-004
L8	6.8 μH RF choke		542-3004-689
	LOUD SPEAKER		
LS1	Speaker assembly		023-2927-001
	Includes:		
LS	Speaker		589-1003-002
MP	Foam ring		018-0960-001
MP	Foam ring		018-0960-002
	MICROPHONE		
MK1	Microphone assembly	(123A)	023-2708-005
	Includes:		
CH	Case back		023-2701-003
ML	Grille cloth		018-0919-001
MP	Cord clamp		016-1798-001
MP	Resonator		018-0918-001
MP	Case front		032-0216-002
MP	Actuator		032-0218-001
NP	Nameplate		559-0036-001
NP	Viking head		559-0037-001
S	Switch, mike		583-3001-011
U	Cup assm, mike		023-2707-001
W	No. 26 G strand wire		071-0912-105
W	No. 26 blk. strand wire		071-0912-110
W	Retractile cable		597-2001-004
	MECHANICAL PARTS		
MP1	Heat sink for TO-39		013-1074-001
MP2	Heat sink		014-0671-001
MP3	Spacer, switch (long)	(122)	013-1369-001
MP3	Bushing	(123A)	018-0036-011
MP4	Spacer, switch (short)	(122)	013-1369-002
MP5	Bushing		018-0036-011
MP7	Knob, volume	(122)	032-0236-001
MP8	Knob, squelch	(122)	032-0236-001
MP9	Dial	(122)	032-0331-002
MP10	Knob, on-off	(122)	547-0006-020

PARTS LIST (cont'd)

SYMBOL NO.	DESCRIPTION		PART NO.
	OVERLAYS (122)		
ML5	Overlay, channel indicator	(122)	559-2073-001
NP1	Overlay	(122)	559-2071-001
	TRANSISTORS		
Q1	SI NPN 50 MHz amp TO92		576-0003-018
Q2-Q10	SI NPN gen. purp. TO92		576-0003-011
Q11, Q12	SI NPN 60V 4A 36W X75		576-0002-001
Q13	SI NPN 50 MHz amp. TO92		576-0003-018
Q14	SI NPN gen. purp. TO92		576-0003-011
Q15	0.4W 27 MHz amp. TO39	(122)	576-0004-004
Q15	SI NPN HF osc.	(123A)	576-0004-006
Q16	0.4W 27 MHz amp. TO39		576-0004-004
Q17	3.4W 27 MHz amp. TO39		576-0004-005
	RESISTORS		
R1	1.5K ohm K 1/2 W	(123A)	569-1504-152
R2	10K ohm K 1/2 W		569-1504-103
R3	47 ohm K 1/2 W		569-1504-470
R4	1.0K ohm K 1/2 W	(122)	569-1504-102
R4	1.5K ohm K 1/2 W	(123A)	569-1504-152
R7	2.2K 0.1 W trim pot.		562-0019-222
R8	62 ohm J 1/2 W		569-1503-620
R9	4.7K ohm K 1/2 W		569-1504-472
R12	10K ohm K 1/2 W		569-1504-103
R13	10K malloslide	(122)	562-0025-003
R14	150K ohm K 1/2 W		569-1504-154
R15	68K ohm K 1/2 W		569-1504-683
R16	100K ohm K 1/2 W		569-1504-104
R17	2.2K ohm K 1/2 W		569-1504-222
R19	Same as R17		
R21	Same as R17		
R22	680 ohn K 1/2 W		569-1004-681
R23	330 ohm K 1/2 W		569-1504-331
R24	22K ohm K 1/2 W		569-1504-223
R25	330 ohm K 1/2 W		569-1504-331
R26	680 ohm K 1/2 W	(122)	569-1504-681
R26	1.0K ohm K 1/2 W	(123A)	569-1504-102
R27	5K malloslide	(122)	562-0025-004
R29	1.0K ohm K 1/2 W		569-1504-102
R31	3.3K ohm K 1/2 W		569-1504-332
R32	120 ohm K 1/2 W		569-1504-121
R34	3.3K ohm K 1/2 W		569-1504-332
R35	470 ohm K 1/2 W		569-1504-471
R37	330 ohm K 1/2 W		569-1504-331
R38	470 ohm K 1/2 W		569-1504-471
R39	510 ohm J 1/2 W		569-1503-511
R41	27 ohm K 1/2 W		569-1504-270
R42	1.0 ohm K 1/2 W		569-2503-109
R43	2.2K ohm K 1/2 W		569-1504-222
R45	470 ohm K 1/2 W		569-1504-471
R46	120 ohm K 1/2 W	(122)	569-1504-121
R46	33 ohm K 1/2 W	(123A)	569-1504-330
R47	2.7K ohm K 1/2 W		569-1504-272
R48	120 ohm K 1/2 W		569-1504-121
R49	680 ohm K 1/2 W		569-1504-681
R50	22 ohm K 1/4 W		569-1002-220
R51	120 ohm K 1/2 W		569-1504-121
R52	390 ohm K 1/2 W		569-1504-391
R53	39K ohm K 1/2 W		569-1504-393
R54	6.8K ohm K 1/2 W		569-1504-682
R55	120 ohm K 1/2 W		569-1504-121
R56	220 ohm K 1/2 W		569-1504-221
R57	120 ohm K 1/2 W		569-1504-121
R58	62 ohm J 1/2 W		569-1503-620
R59	2.2K ohm K 1/2 W		569-1504-222
R61	3.3K ohm K 1/2 W		569-1504-332
R62	470 ohm K 1/2 W		569-1504-471
R63	47 ohm K 1/2 W	(122)	569-1504-470
R63	27 ohm K 1/2 W	(123A)	569-1504-270
R64	470 ohm K 1/2 W		569-1504-471
R65	120 ohm K 1/2 W		569-1504-121
R66	47 ohm K 1/2 W		569-1504-470
R67	1.2K ohm K 1/2 W		569-1504-122
R68	47K ohm K 1/2 W		569-1004-473
R70	1.0K ohm K 1/4 W	(123A)	569-1002-102
R81	5K 1/8 W PC trim pot.	(123A)	562-0004-502
R82	27 ohm K 1/4 W	(123A)	569-1002-270
RT1	8.0K ohm K -4.4 therm.		569-3001-001
	SWITCHES		
S1	PB switch	(122)	583-4008-021
S2	Switch wafer	(122)	583-2009-211
	TRANSFORMERS		
T1	10MM 27 MHz ant. xfmr.		592-5015-001
T2	10MM 27 MHz mix. xfmr.		592-5015-002
T3	7MM 455 kHz IF xfmr.		592-5020-004
T4	Same as T3		
T5	Input/driver xfmr.		592-1007-004
T6	Out/mod xfmr.		592-1013-006
T7	10MM 27 MHz osc. xfmr.		592-5015-004
T8	10MM 27 MHz auto-xfmr.		592-5015-005
T9-T11	Same as T8		
T12	25-40 MHz osc. xfmr.		592-5014-001
T13	25-50 MHz driver xfmr.		592-5014-002
	PEC, PC BOARD		
U1	PEC R.F. amp. silicon		544-0003-011
U2	PEC 1st mixer, silicon		544-0002-011
U3	PEC 1st I.F. 120 silicon		544-0003-043
U4	PEC 2nd I.F. silicon		544-0002-014
U5	PEC noise limit. germ.		544-0002-015
U6	PEC audio silicon		544-0002-026
U7	PC board	(122)	035-0181-002
U10	PC board	(123A)	035-0181-013
	CRYSTALS		
Y1	5.7350 MHz HC-18/U		519-0023-104
Y2	5.7250 MHz HC-18/U		519-0023-103
Y3	5.7150 MHz HC-18/U		519-0023-102
Y4	5.6950 MHz HC-18/U		519-0023-101
Y5	6.1904 MHz HC-18/U		519-0023-108
Y6	6.1804 MHz HC-18/U		519-0023-107
Y7	6.1704 MHz HC-18/U		519-0023-106
Y8	6.1504 MHz HC-18/U		519-0023-105
Y9	32.700 MHz 3 OT HC-18/U		519-0024-001
Y10	32.750 MHz 30T HC-18/U		519-0024-002
Y11	32.800 MHz 3 OT HC-18/U		519-0024-003
Y12	32.850 MHz 3 OT HC-18/U		519-0024-004
Y13	32.900 MHz 3 OT HC-18/U		519-0024-005
Y14	32.950 MHz 3 OT HC-18/U		519-0024-006
	ELECTRONIC NETWORK		
Z1	Mech. filt-xfmr. pair		532-1004-001

ENGINEERING CHANGES

Serial Number stickers can be used as a guide to unit revisions, but should not be considered absolutely accurate in every instance. For example, a D Model unit might not include every D Model change, and an E Model might include an F Model change. These changes are listed only as a servicing aid.

MESSENGER 123A REVISION B

Components Added	Schematic Location	Part Description	Part Number	Reason
J1	B10	External speaker jack	515-2001-001	Improve performance
EP3	B6	Ferrite bead	517-2002-001	Prevent RF feedback when used with power pack

MESSENGER 123A REVISION C

Components Changed	Schematic Location	From	To	New Part Number	Reason for Change
C21	B3	150 pF	820 pF	510-0001-821	Low oscillator dropout
C22	B3	43 pF	390 pF	510-0001-391	
C44	C3	82 pF	100 pF	510-3016-101	
C47	C3	39 pF	0.01μF	510-3010-103	
C48	C3	82 pF	180 pF	510-3020-181	
C60	C6	0.001μF	0.047μF	510-3010-473	
C70	C6	0.01μF	0.047μF	510-3010-473	
R17	B2	22KΩ	2.2KΩ	569-1504-222	
R19	B3	33KΩ	2.2KΩ	569-1504-222	
R21	B2	22KΩ	2.2KΩ	569-1504-222	
R22	C3	39KΩ	680Ω	569-1004-681	
R23	B3	2.7KΩ	330Ω	569-1504-331	
R48	D3	120Ω	47Ω	569-1504-470	
S2	C1	9102	9103	569-2029-103	
U5	A7	2035	2015	544-0002-015	Availability

Components Deleted	Schematic Location	Part Description	Reason for Change
C20	B2	33 pF ±5%, 200V NPO	Low oscillator dropout
L1	B2	220μH choke, RF	Low oscillator dropout
R5	A3	1KΩ ±10%, 1/2 W	New PEC U3
R6	B5	100KΩ ±10%, 1/4 W	New PEC U3
R11	A8	330KΩ ±10%, 1/2 W	New PEC U5
R18	B2	1KΩ ±10%, 1/2 W	Low oscillator dropout

MESSENGER 122 REVISION B
MESSENGER 123A REVISION D

Components Changed	Schematic Location	From	To	New Part Number	Reason for Change
*R48	D3	47Ω	120Ω	569-1504-121	Voltage sensitive squeal
*U5	A7	2035	2015	544-0002-015	Availability
*Y1	B1	3004	3104	519-0023-104	Low oscillator stability
*Y2	B1	3003	3103	519-0023-103	
*Y3	B1	3002	3102	519-0023-102	
*Y4	B1	3001	3101	519-0023-101	
*Y5	B2	3008	3108	519-0023-108	
*Y6	B2	3007	3107	519-0023-107	
*Y7	B2	3006	3106	519-0023-106	
*Y8	B2	3005	3105	519-0023-105	

Components Deleted	Schematic Location	Part Description	Reason
*L1	B2	220 μH RF choke	Low oscillator stability
*R5	A4	1 KΩ, 1/2 W, CC	Included in U3
*R6	A5	100 KΩ, 1/2 W, CC	Included in U3
*R11	A8	330 KΩ, 1/4 W, CC	Included in U5

Components Added	Schematic Location	Part Description	Part Number	Reason
EP3	B6	Ferrite Bead	517-2002-001	Suppress self-modulation
EP48	D4	Ferrite Bead	517-2002-002	Zener noise

Components Repositioned	New Location	Reason
*CR7	Refer to components layout.	Receiver oscillations
*R21		
*R25		Voltage sensitive squeal
**RT2	Meter lugs	Avoid breakage
Jumper wire Orange lead to R24 Yellow lead to R61 Violet lead lengthened from T1 to C73		Receiver oscillations

MESSENGER 122 REVISION C
MESSENGER 123A REVISION E

Components Changed	Schematic Location	From	To	New Part Number	Reason for Change
Z1	A4	2001	4001	023-3254-001	Availability

MESSENGER 122 REVISION D
MESSENGER 123A REVISION F

Components Changed	Schematic Location	From	To	New Part Number	Reason for Change
**U1		1011	1012	035-0181-012	Mount Z1 on board
U1		1001	1002	035-0181-002	Mount Z1 on board
*R2	A2	22K	10K	569-1004-103	T2 tuning range

Components Added	Schematic Location	Part Description	Part Number	Reason for Change
*C121	A3	0.01 μF M, 50V, Y5U	510-3002-103	Receiver stability
*C90	A4	470 pF J, 100V, 1DM15	510-0001-471	Part of Z1
*L8	A5	6.8 μH RF choke	542-3004-689	Receiver stability

* Indicates a change common to the MESSENGER 122 and MESSENGER 123A.
** Indicates a change in the MESSENGER 123A only.

The following changes are made to the Messenger 123A to make a Messenger 123B:

Components Added	Schematic Location	Part Description	Part Number
C100	D2	4700 pF ±20%, Z5U	510-3001-472
CR100	D2	1N4818, 200V, 1.5A	523-0013-201
CH3	--	Front panel	023-2618-032
NP14	--	Upper overlay, M123B	559-2032-031
S100	D2	DPDT slide switch	583-3001-005

The following changes are made to the Messenger 123B to make a Messenger 123SJ:

Components Added	Schematic Location	Part Description	Part Number
CR201	D4	Red, light emitting diodes	549-4001-002
CR202	D4	↓	↓
CR203	D4		
CR204	D4		
CR205	D4		
CR206	D4		
DS201	D4	2193D 14.4V, 0.12A	549-3001-003
Q201	D4	Silicon PNP 50 MHz amp	576-0003-017
Q202	D4	Silicon NPN amp	576-0003-011
Q203	D4	Silicon NPN amp	576-0003-011
R201	D4	680 ohm ±10%, 1/4 W	569-1002-681

Components Added	Schematic Location	Part Description	Part Number
R202	D4	1.2K ohm ±10%, 1/4 W	569-1002-122
R203	D4	1K ohm ±10%, 1/4 W	569-1002-102
R204	D4	680 ohm ±10%, 1/4 W	569-1002-681
R205	D4	390 ohm ±10%, 1/4 W	569-1002-391
R206	D4	10 ohm ±10%, 1/4 W	569-1002-100
R207	D4	820 ohm ±10%, 1/4 W	569-1002-821
R208	D4	220 ohm ±10%, 1/4 W	569-1002-221
R209	D4	150K ohm ±10%, 1/4 W	569-1002-154
R210	D4	33K ohm ±10%, 1/4 W	569-1002-333
R211	D4	4.7K ohm ±10%, 1/4 W	569-1002-472
R212	D4	68 ohm ±10%, 1 W	569-1006-680
R213	D4	47K ohm ±10%, 1/4 W	569-1002-473
U201	--	PC board	035-0251-001
NP14	--	Upper overlay (M123SJ)	559-2032-111
NP15	--	Lower overlay (M123SJ)	559-2033-001

Parts Deleted	Schematic Location	Part Description	Part Number
DS1	B9	6.3V bulb	549-3001-007
DS2	B10	6.3V bulb	549-3001-007

MESSENGER 123A REVISION G
MESSENGER 123B REVISION B
MESSENGER 123SJ REVISION B

Components Deleted	Schematic Location	Part Description	Part Number	Reason for Change
C15	A8	4700 pF ±20%, 50V	510-3204-472	Audio distortion
CR2	A6	1N4148 silicon diode	523-1500-883	Audio distortion

Components Changed	Schematic Location	From	To	New Part Number	Reason for Change
C27	B7	0.0022μF	0.047μF	510-3010-473	Self-modulation
C35	B9	0.01μF	0.022μF	510-3202-223	Audio distortion
C36	B9	0.01μF	0.022μF	510-3202-223	Audio distortion
C42	C2	6.8 pF	8.2 pF	520-3220-829	Improve T7 tuning
C43	C2	27 pF	22 pF	510-3216-220	Improve T7 tuning
CR2	A6	1N881	1N4148	523-1500-883	Availability
CR5	A8	↓	↓	↓	↓
CR11	C9				
CR14	C4				
CR15	C4				
CR17	B4				
J1	B10	1001	1011	515-2001-011	
J3	D1			023-3370-001	
Q11	B9	2001	2029	576-0002-029	
Q12	B9	2001	2029	576-0002-029	
Q15	C6	4006	4035	576-0004-035	
R7	A5	2.2KΩ	1KΩ	562-0019-102	Increased tuning range
R17	B2	2.2K	1.5K	569-1504-152	LF oscillator bias regulation
R21	B2	2.2K	2.7K	569-1504-272	LF oscillator bias regulation

Components Changed	Schematic Location	From	To	New Part Number	Reason for Change
R26	B4	1.5KΩ	1KΩ	569-1504-102	Increased squelch threshold
R39	B9	510Ω	470Ω	569-1503-471	Audio distortion
R41	B9	33Ω	27Ω	569-1502-270	Audio distortion
R47	C2	2.7K	2.2K	569-1504-222	HF oscillator bias regulation to prevent oscillator dropout
R58	D4	62Ω	27Ω	569-1504-270	Improve CR13 regulation at low voltages
RT71	A8	470Ω	8K thermistor	569-3001-001	Audio distortion at cold temps
T7	C3	5004	5006	592-5015-006	Oscillator dropout at high temperatures
Front panel		plated	painted	023-2618-031 (M123A) 023-2618-032 (M123B) 023-2618-033 (M123SJ)	Availability ↓

MESSENGER 123A REVISION H

Components Changed	Schematic Location	From	To	New Part Number	Reason for Change
U10	---	1013	1005	035-0181-005	LED meter

Components Deleted	Schematic Location	Part Description	Reason for Change
Q6	B3	Silicon NPN general purpose	Improved DC switching
R24	B3	22KΩ ±10%, 1/2 W	
R25	B4	330Ω ±10%, 1/2 W	

MESSENGER 122 AND 123A
COMPONENTS LAYOUT *
(AS VIEWED FROM THE SOLDER SIDE)

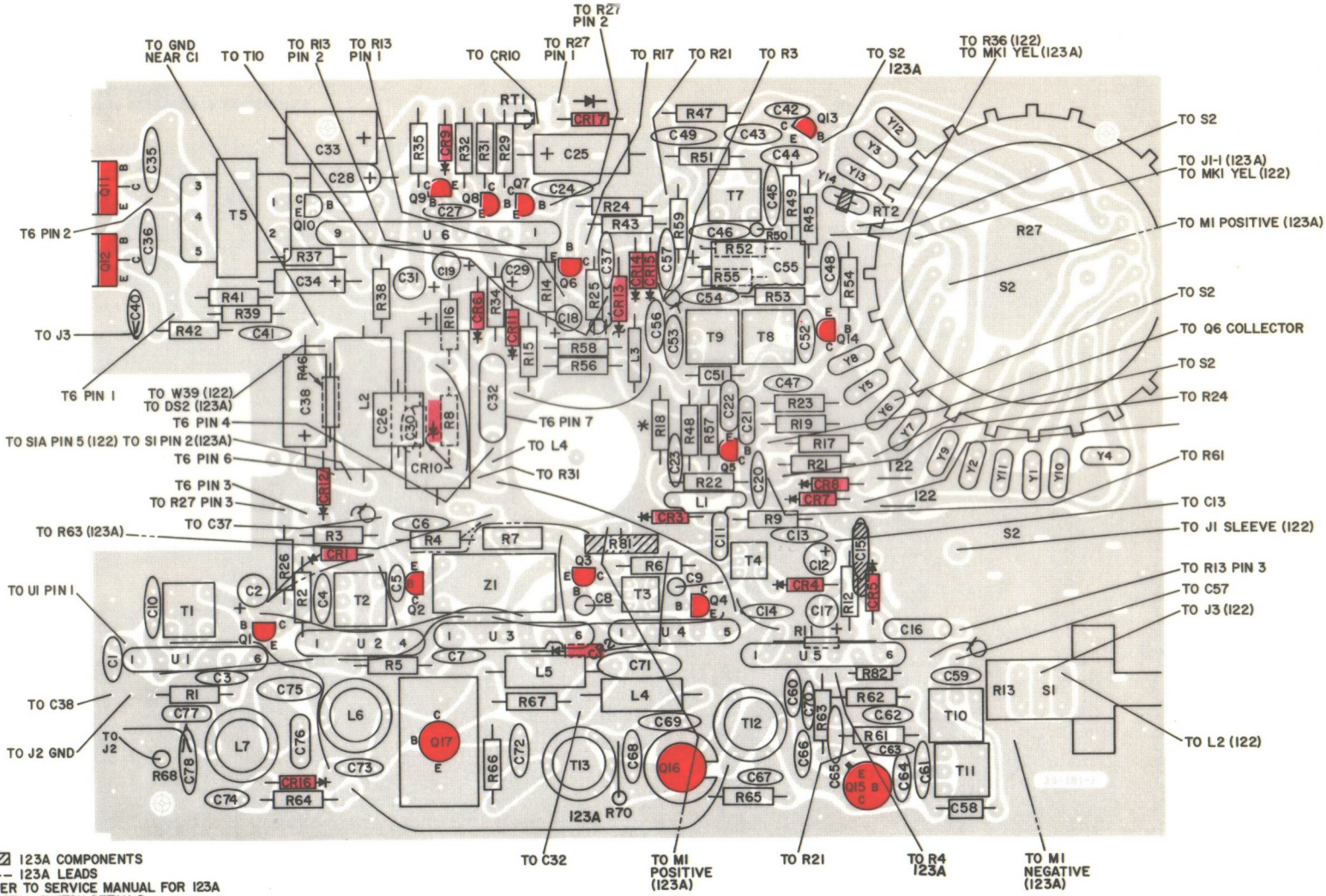

NOTES:

1. ▨ 123A COMPONENTS
2. ---- 123A LEADS
3. REFER TO SERVICE MANUAL FOR 123A CRYSTAL SWITCH DETAILS.
4. *123A (A AND B MODEL) LOW OSCILLATOR CONFIGURATION
5. 122 (A MODEL) AND 123A (C MODEL) LOW OSCILLATOR CONFIGURATION:

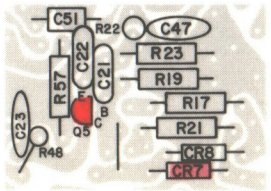

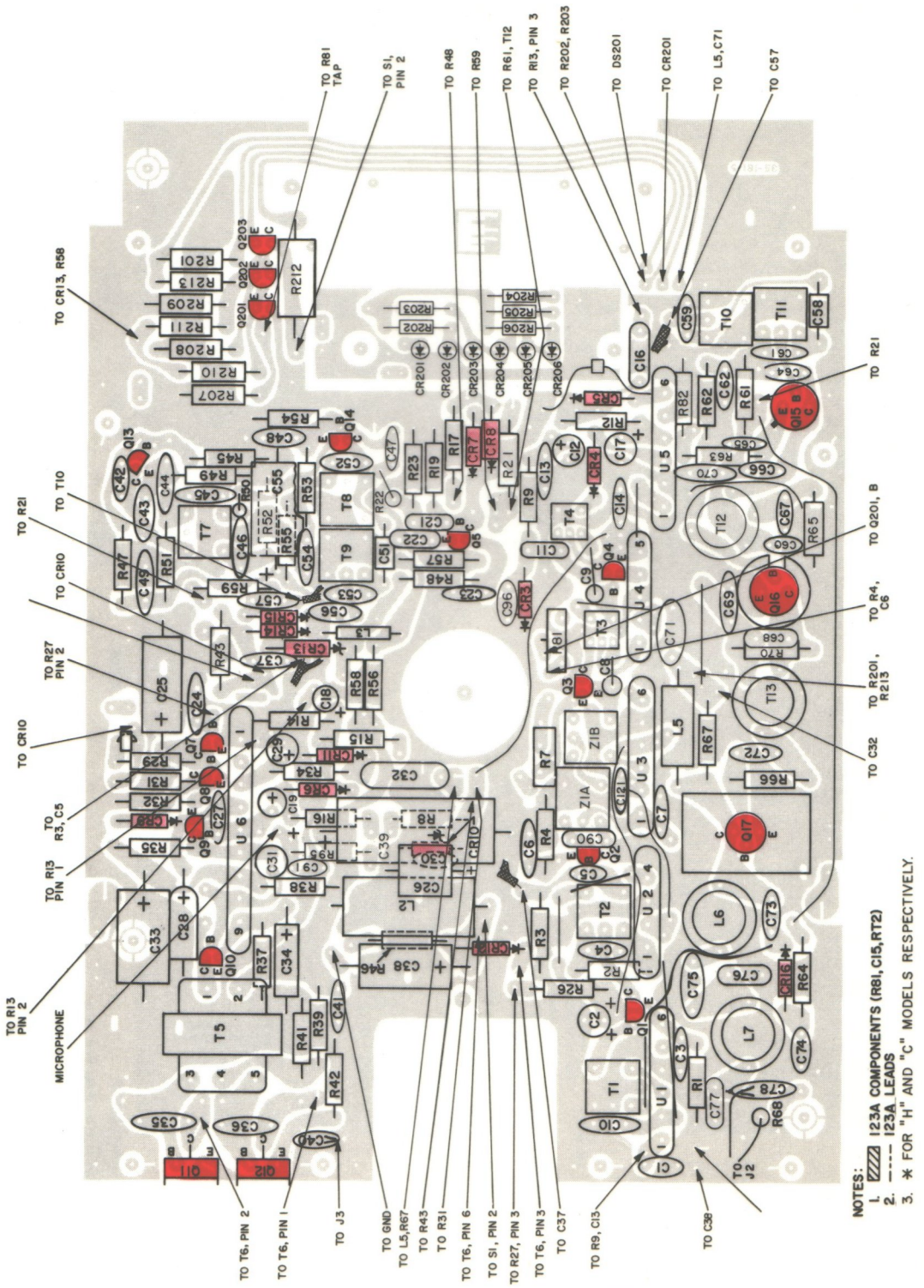

NOTES:
1. ▨ 123A COMPONENTS (R81, C15, RT2)
2. ---- 123A LEADS
3. * FOR "H" AND "C" MODELS RESPECTIVELY.

MESSENGER 123A AND 123SJ
COMPONENTS LAYOUT*
(AS VIEWED FROM THE SOLDER SIDE)

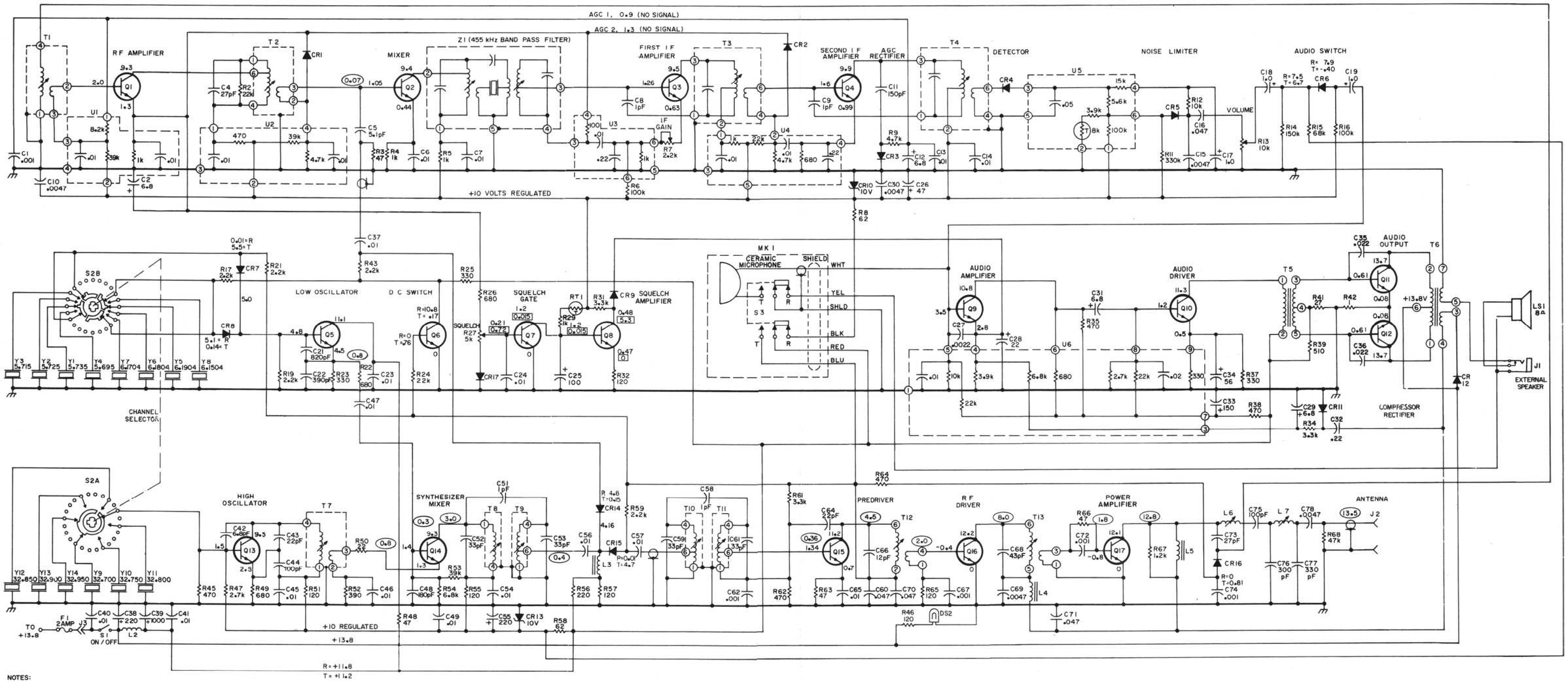

NOTES:

1. ALL RESISTOR VALUES IN OHMS UNLESS OTHERWISE SPECIFIED.
2. ALL CAPACITOR VALUES IN MICROFARADS UNLESS OTHERWISE SPECIFIED.
3. VOLTAGES TAKEN USING H. P. 410C, MEASURED WITH RESPECT TO CHASSIS GROUND. VOLTAGES MAY VARY ±10% FROM TYPICAL READINGS SHOWN. RECEIVER - NO SQUELCH (CONTROL FULL LEFT). NO SIGNAL. TRANSMITTER - 50 OHM LOAD CONNECTED TO J2. KEYED. NO MODULATION.
4. ▭ SQUELCHED CONDITION VOLTAGE READING.
5. ⬭ = RF VOLTAGE READINGS TAKEN WITH BOONTON 91C. RF VOLTMETER (1000:1 PROBE). UNMODULATED 3.7 WATT RF POWER OUTPUT.
6. S2A AND B ARE SHOWN IN CHANNEL 1 POSITION. S2A IS VIEWED FROM THE BOTTOM AND S2B IS VIEWED FROM THE TOP.

MESSENGER 122 SCHEMATIC

PART NO 242-0122-001
(FOR UNITS WITH "A" OR LATER MODEL DESIGNATOR ON SERIAL NUMBER STICKER)

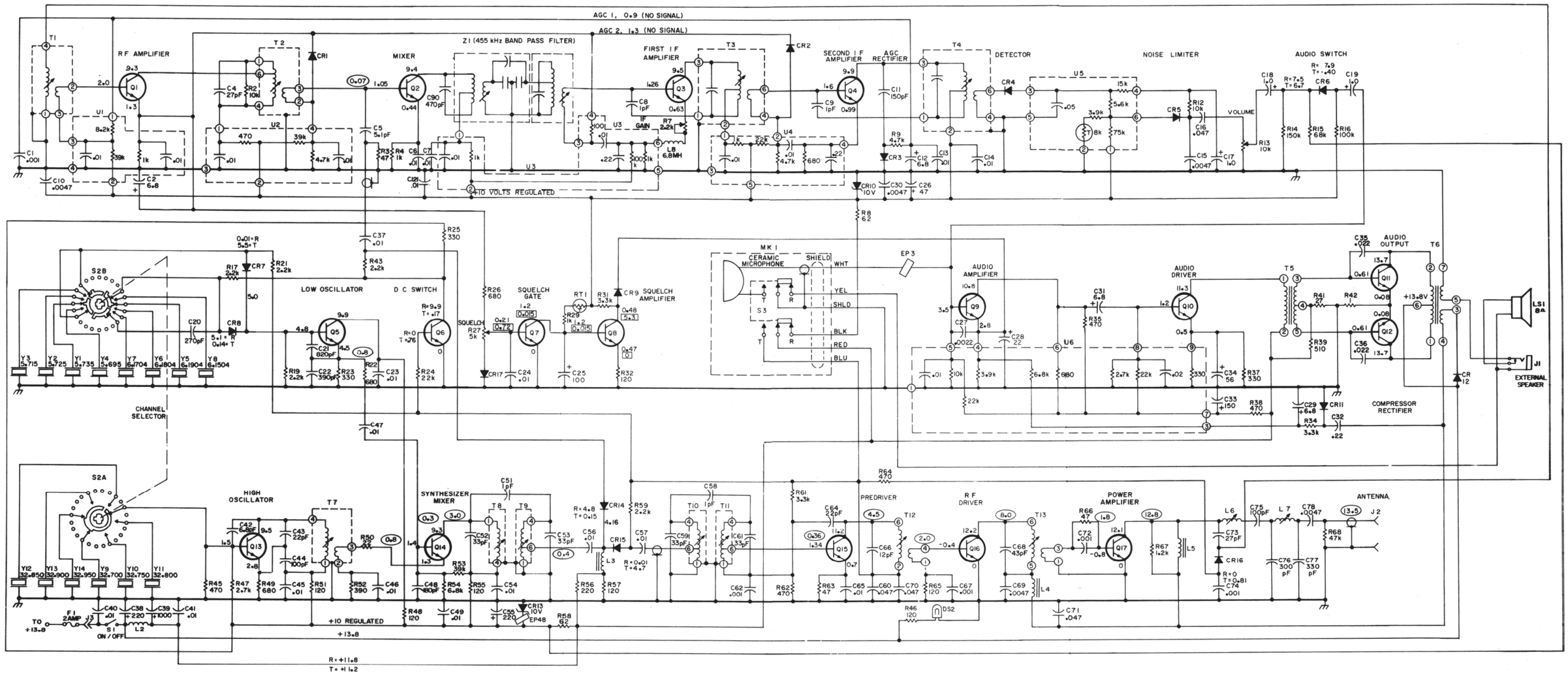

NOTES:

1. ALL RESISTOR VALUES IN OHMS UNLESS OTHERWISE SPECIFIED.
2. ALL CAPACITOR VALUES IN MICROFARADS UNLESS OTHERWISE SPECIFIED.
3. VOLTAGES TAKEN USING H.P. 410C, MEASURED WITH RESPECT TO CHASSIS GROUND. VOLTAGES MAY VARY ±10% FROM TYPICAL READINGS SHOWN. RECEIVER - NO SQUELCH (CONTROL FULL LEFT). NO SIGNAL. TRANSMITTER - 50 OHM LOAD CONNECTED TO J2. KEYED. NO MODULATION.
4. ▭ SQUELCHED CONDITION VOLTAGE READING.
5. ⬭ • RF VOLTAGE READINGS TAKEN WITH BOONTON 91C. RF VOLTMETER (1000:1 PROBE). UNMODULATED 3.7 WATT RF POWER OUTPUT.
6. S2A AND B ARE SHOWN IN CHANNEL 1 POSITION. S2A IS VIEWED FROM THE BOTTOM AND S2B IS VIEWED FROM THE TOP.

MESSENGER 122 SCHEMATIC

PART NO 242-0122-001
(FOR UNITS WITH "D" OR LATER MODEL DESIGNATOR ON SERIAL NUMBER STICKER)

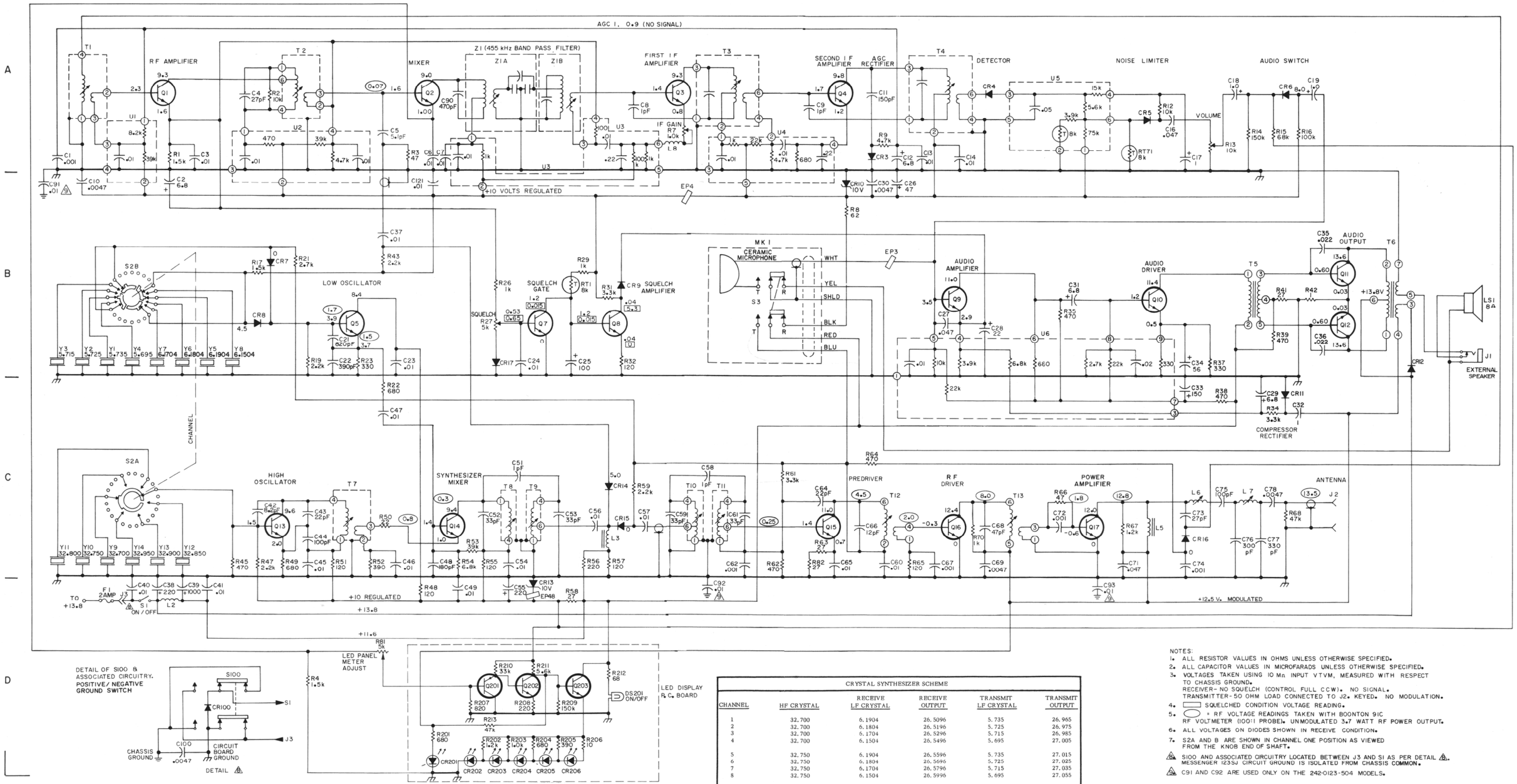

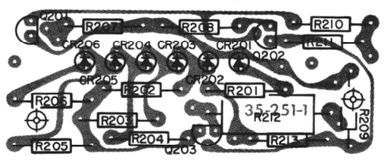

LED METER BOARD
SOLDER SIDE VIEW

CRYSTAL SYNTHESIZER SCHEME					
CHANNEL	HF CRYSTAL	RECEIVE LF CRYSTAL	RECEIVE OUTPUT	TRANSMIT LF CRYSTAL	TRANSMIT OUTPUT
1	32.700	6.1904	26.5096	5.735	26.965
2	32.700	6.1804	26.5196	5.725	26.975
3	32.700	6.1704	26.5296	5.715	26.985
4	32.700	6.1504	26.5496	5.695	27.005
5	32.750	6.1904	26.5596	5.735	27.015
6	32.750	6.1804	26.5696	5.725	27.025
7	32.750	6.1704	26.5796	5.715	27.035
8	32.750	6.1504	26.5996	5.695	27.055
9	32.800	6.1904	26.6096	5.735	27.065
10	32.800	6.1804	26.6196	5.725	27.075
11	32.800	6.1704	26.6296	5.715	27.085
12	32.800	6.1504	26.6496	5.695	27.105
13	32.850	6.1904	26.6596	5.735	27.115
14	32.850	6.1804	26.6696	5.725	27.125
15	32.850	6.1704	26.6796	5.715	27.135
16	32.850	6.1504	26.6996	5.695	27.155
17	32.900	6.1904	26.7096	5.735	27.165
18	32.900	6.1804	26.7196	5.725	27.175
19	32.900	6.1704	26.7296	5.715	27.185
20	32.900	6.1504	26.7496	5.695	27.205
21	32.950	6.1904	26.7596	5.735	27.215
22	32.950	6.1804	26.7696	5.725	27.225
23	32.950	6.1504	26.7996	5.695	27.255

NOTE: All frequencies are in MHz.

NOTES:
1. ALL RESISTOR VALUES IN OHMS UNLESS OTHERWISE SPECIFIED.
2. ALL CAPACITOR VALUES IN MICROFARADS UNLESS OTHERWISE SPECIFIED.
3. VOLTAGES TAKEN USING 10 Mn INPUT VTVM, MEASURED WITH RESPECT TO CHASSIS GROUND.
   RECEIVER- NO SQUELCH (CONTROL FULL CCW). NO SIGNAL.
   TRANSMITTER-50 OHM LOAD CONNECTED TO J2. KEYED. NO MODULATION.
4. ▭ SQUELCHED CONDITION VOLTAGE READING.
5. ⬭ = RF VOLTAGE READINGS TAKEN WITH BOONTON 91C RF VOLTMETER (100:1 PROBE). UNMODULATED 3.7 WATT RF POWER OUTPUT.
6. ALL VOLTAGES ON DIODES SHOWN IN RECEIVE CONDITION.
7. S2A AND B ARE SHOWN IN CHANNEL ONE POSITION AS VIEWED FROM THE KNOB END OF SHAFT.

⚠8 S100 AND ASSOCIATED CIRCUITRY LOCATED BETWEEN J3 AND S1 AS PER DETAIL ⚠8. MESSENGER 123SJ CIRCUIT GROUND IS ISOLATED FROM CHASSIS COMMON.

⚠9 C91 AND C92 ARE USED ONLY ON THE 242-0123-504 MODELS.

MESSENGER 123A AND 123SJ SCHEMATIC DIAGRAM
(FOR M123A WITH "H" OR LATER AND M123SJ WITH "C" OR LATER REVISION LETTER DESIGNATOR ON SERIAL NUMBER STICKER)

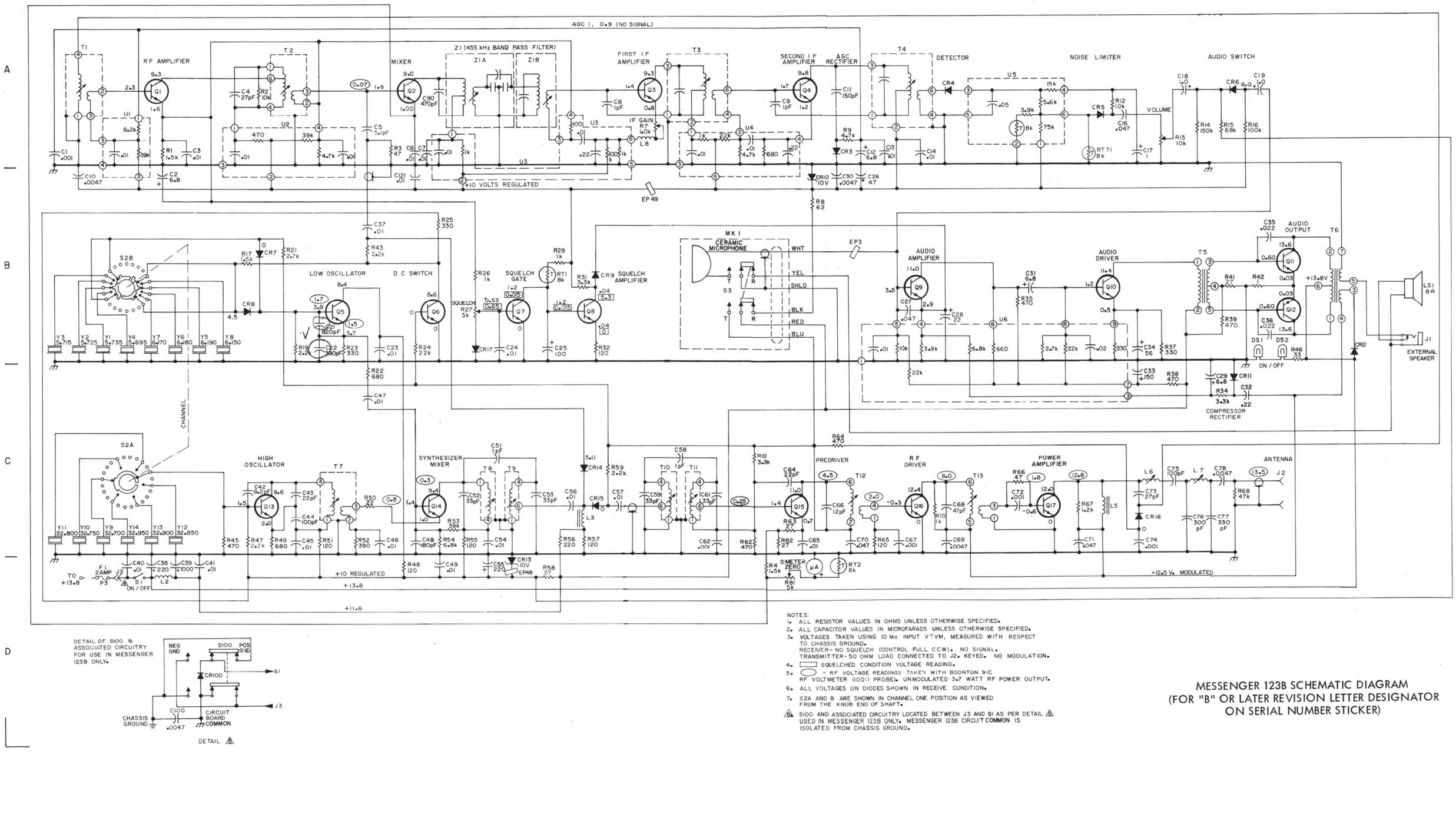

DETAIL OF S100 & ASSOCIATED CIRCUITRY FOR USE IN MESSENGER 123B ONLY.

DETAIL ⚠6

NOTES:
1. ALL RESISTOR VALUES IN OHMS UNLESS OTHERWISE SPECIFIED.
2. ALL CAPACITOR VALUES IN MICROFARADS UNLESS OTHERWISE SPECIFIED.
3. VOLTAGES TAKEN USING 10 Mn INPUT VTVM, MEASURED WITH RESPECT TO CHASSIS GROUND.
   RECEIVER- NO SQUELCH (CONTROL FULL CCW). NO SIGNAL.
   TRANSMITTER- 50 OHM LOAD CONNECTED TO J2. KEYED. NO MODULATION.
4. ▭ SQUELCHED CONDITION VOLTAGE READING.
5. ⬭ = RF VOLTAGE READINGS TAKEN WITH BOONTON 91C RF VOLTMETER (100:1 PROBE). UNMODULATED 3.7 WATT RF POWER OUTPUT.
6. ALL VOLTAGES ON DIODES SHOWN IN RECEIVE CONDITION.
7. S2A AND B ARE SHOWN IN CHANNEL ONE POSITION AS VIEWED FROM THE KNOB END OF SHAFT.

⚠6 S100 AND ASSOCIATED CIRCUITRY LOCATED BETWEEN J3 AND S1 AS PER DETAIL ⚠6 USED IN MESSENGER 123B ONLY. MESSENGER 123B CIRCUIT COMMON IS ISOLATED FROM CHASSIS GROUND.

MESSENGER 123B SCHEMATIC DIAGRAM
(FOR "B" OR LATER REVISION LETTER DESIGNATOR ON SERIAL NUMBER STICKER)

JOHNSON MESSENGER 122-123A
SERVICE MANUAL REVISIONS

The following additions and changes are to be made to the Messenger 122-123A Transceiver Service Manual, Part No. 001-0122-001, with a rear cover date of 5-74.

ENGINEERING CHANGES

The Messenger 123A has been adapted to operate from either positive or negative ground supply voltage. The positive/negative ground transceiver, Part No. 242-0123-003, can be divided into three versions with the final version being the Messenger 123SJ, Part No. 242-0123-004.

The first version is an interim model which has a Messenger 123A front panel upper overlay and an exposed positive/negative ground conversion switch with a locking plate as shown in Figure 1. This model had a limited production of approximately 1500 units before it was discontinued and replaced by the Messenger 123B.

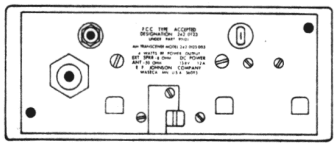

Positive/Negative Ground Messenger 123A
Figure 1

The Messenger 123B is the second version of the positive/negative ground transceiver. The Messenger 123B has a new front panel overlay and a submerged positive/negative ground conversion switch on the rear panel as shown in Figure 2.

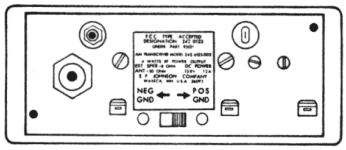

Messenger 123B
Figure 2

The Messenger 123SJ is the final version and has the same positive/negative ground conversion switch as the Messenger 123B but it also has a solid state LED, "S"/power meter. The Messenger 123SJ replaces the Messenger 123B. Electrically all three transceivers are identical, the printed circuit board has been isolated from the chassis rail and the switching circuit has been added. Refer to the schematic for the switching circuit and the solid state meter circuit board components layout.

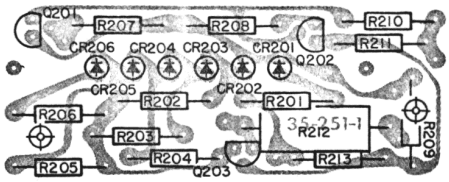

LED METER BOARD
SOLDER SIDE VIEW

The LED meter circuit operates much the same as the old meter. In the receive condition, the received signal is rectified by the base emitter junction of Q2 and applied to the base of Q201 at a level set by R81, the meter adjust. The negative voltage on its base causes Q201 to conduct. With Q201 conducting, Q202 cuts off. The positive voltage on the collector of Q202 then forward biases Q203 into conduction. The path of conduction is from ground through one or more of the LED's in the emitter of Q203, through Q203 to B+. The number of LED's that turn on depends upon the amplitude of the received signal at Q2. CR201 is "on" all the time.

In the transmit condition, some of the RF carrier leaks through CR16 and is coupled through T1 and Q1 to Q2 where it is rectified and causes a meter indication in the same manner as a received signal. When the transmitter is modulated, a sample of the modulation is applied to the base of Q203 which aids the conduction of Q203 caused by the RF carrier.

The following changes are made to the Messenger 123A to make a Messenger 123B.

Components Added	Schematic Location	Part Description	Part Number
C100	D2	4700 pF ±20%, Z5U	510-3001-472
CR100	D2	1N4818, 200V, 1.5A	523-0013-201
CH3	--	Front panel	023-2618-032
NP14	--	Upper overlay, M123B	559-2032-031
S100	D2	DPDT slide switch	583-3001-005

The following changes are made to the Messenger 123B to make a Messenger 123SJ.

Components Added	Schematic Location	Part Description	Part Number
CR201	D4	Red, light emitting diodes	549-4001-002
CR202	D4	↓	↓
CR203	D4		
CR204	D4		
CR205	D4		
CR206	D4		
DS201	D4	2193D 14.4V, 0.12A	549-3001-003
Q201	D4	Silicon PNP 50 MHz amp	576-0003-017
Q202	D4	Silicon NPN amp	576-0003-011
Q203	D4	Silicon NPN amp	576-0003-011
R201	D4	680 ohm ±10%, 1/4 W	569-1002-681

Components Added	Schematic Location	Part Description	Part Number
R202	D4	1.2K ohm ±10%, 1/4 W	569-1002-122
R203	D4	1K ohm ±10%, 1/4 W	569-1002-102
R204	D4	680 ohm ±10%, 1/4 W	569-1002-681
R205	D4	390 ohm ±10%, 1/4 W	569-1002-391
R206	D4	10 ohm ±10%, 1/4 W	569-1002-100
R207	D4	820 ohm ±10%, 1/4 W	569-1002-821
R208	D4	220 ohm ±10%, 1/4 W	569-1002-221
R209	D4	150K ohm ±10%, 1/4 W	569-1002-154
R210	D4	33K ohm ±10%, 1/4 W	569-1002-333
R211	D4	4.7K ohm ±10%, 1/4 W	569-1002-472
R212	D4	68 ohm ±10%, 1 W	569-1006-680
R213	D4	47K ohm ±10%, 1/4 W	569-1002-473
U201	--	PC board	035-0251-001
NP14	--	Upper overlay (M123SJ)	559-2032-111
NP15	--	Lower overlay (M123SJ)	559-2033-001

Parts Deleted	Schematic Location	Part Description	Part Number
DS1	B9	6.3V bulb	549-3001-007
DS2	B10	6.3V bulb	549-3001-007

The following changes have been made to all three transceivers.

REVISION

Messenger 123A G Revision
Messenger 123B B Revision (after July 1975)
Messenger 123SJ B Revision

Components Deleted	Schematic Location	Part Description	Part Number	Reason for Change
C15	A8	4700 pF ±20%, 50V	510-3204-472	Audio distortion
CR2	A6	1N4148 silicon diode	523-1500-883	Audio distortion

Components Changed	Schematic Location	From	To	New Part Number	Reason for Change
C27	B7	0.0022μF	0.047μF	510-3010-473	Self-modulation
C35	B9	0.01μF	0.022μF	510-3202-223	Audio distortion
C36	B9	0.01μF	0.022μF	510-3202-223	Audio distortion
C42	C2	6.8 pF	8.2 pF	520-3220-829	Improve T7 tuning
C43	C2	27 pF	22 pF	510-3216-220	Improve T7 tuning
CR2	A6	1N881	1N4148	523-1500-883	Availability
CR5	A8				
CR11	C9				
CR14	C4				
CR15	C4				
CR17	B4				
J1	B10	1001	1011	515-2001-011	
J3	D1			023-3370-001	
Q11	B9	2001	2029	576-0002-029	
Q12	B9	2001	2029	576-0002-029	
Q15	C6	4006	4035	576-0004-035	
R7	A5	2.2KΩ	1KΩ	562-0019-102	Increased tuning range
R17	B2	2.2K	1.5K	569-1504-152	LF oscillator bias regulation
R21	B2	2.2K	2.7K	569-1504-272	LF oscillator bias regulation

Components Changed	Schematic Location	From	To	New Part Number	Reason for Change
R26	B4	1.5KΩ	1KΩ	569-1504-102	Increased squelch threshold
R39	B9	510Ω	470Ω	569-1503-471	Audio distortion
R41	B9	33Ω	27Ω	569-1502-330	Audio distortion
R47	C2	2.7K	2.2K	569-1504-222	HF oscillator bias regulation to prevent oscillator dropout
R58	D4	62Ω	27Ω	569-1504-270	Improve CR13 regulation at low voltages
RT71	A8	470Ω	8K thermistor	569-3001-001	Audio distortion at cold temps
T7	C3	5004	5006	592-5015-006	Oscillator dropout at high temperatures
Front panel		plated	painted	023-2618-031 (M123A) includes:	Availability
			Upper overlay	559-2032-011	
			Lower overlay	559-2033-041	
				023-2618-032 (M123B) includes:	
			Upper overlay	559-2032-031	
			Lower overlay	559-2033-041	
				023-2618-033 (M123SJ) includes:	
			Upper overlay	559-2032-111	
			Lower overlay	559-2033-001	

Components Added	Schematic Location	Part Description	Part Number	Reason for Change
R71	A8	470Ω ±10%, 1/4 W	569-1002-471	Audio distortion (Changed to RT71)
C96	A6	56 pF ±5% 200V N750	510-3020-560	Audio distortion

CORRECTIONS

Page 6 paragraph 2.2 RECEIVER:

Selectivity 6 kHz bandwidth at -6 dB (EIA 2 signal generator method)

Page 15 Figure 5-2:

The transistor symbol should be NPN.

Page 20 Table 5-5:

Channel No. 11 High Limit should be 27,086.083 kHz and the Low Limit should be 27,083.917 kHz.

Channel No. 23 High Limit should be 27,256.090 kHz.

Page 21 paragraph 5.6:

A sample of the DC output voltage from Q101 is fed back to the base of the voltage amplifier, Q103, by R105.

PARTS LIST CORRECTIONS

S2	Crystal switch assembly on "C" or later models	583-2029-103
MK1	Microphone assembly (M122)	023-2708-005
R13	10KΩ, 1/8 W SPST ON/OFF (M123A)	562-0016-004

AGC 1. 0.9 (NO SIGNAL)

RF AMPLIFIER · MIXER · Z1 (455 kHz BAND PASS FILTER) · Z1A · Z1B · FIRST I F AMPLIFIER · SECOND I F AMPLIFIER · AGC RECTIFIER · DETECTOR · NOISE LIMITER · AUDIO SWITCH · VOLUME · IF GAIN · +10 VOLTS REGULATED

LOW OSCILLATOR · D C SWITCH · SQUELCH GATE · SQUELCH AMPLIFIER · CERAMIC MICROPHONE · AUDIO AMPLIFIER · AUDIO DRIVER · AUDIO OUTPUT · EXTERNAL SPEAKER

CHANNEL · HIGH OSCILLATOR · SYNTHESIZER MIXER · PREDRIVER · R F DRIVER · POWER AMPLIFIER · ANTENNA · COMPRESSOR RECTIFIER · +12.5 Vs MODULATED · +13.8 · +11.6

DETAIL OF S100 & ASSOCIATED CIRCUITRY. POSITIVE/ NEGATIVE GROUND SWITCH

DETAIL ⚠

LED PANEL METER ADJUST · LED DISPLAY R, C, BOARD

NOTES:
1. ALL RESISTOR VALUES IN OHMS UNLESS OTHERWISE SPECIFIED.
2. ALL CAPACITOR VALUES IN MICROFARADS UNLESS OTHERWISE SPECIFIED.
3. VOLTAGES TAKEN USING 10 Mn INPUT VTVM, MEASURED WITH RESPECT TO CHASSIS GROUND.
   RECEIVER - NO SQUELCH (CONTROL FULL CCW). NO SIGNAL.
   TRANSMITTER - 50 OHM LOAD CONNECTED TO J2. KEYED. NO MODULATION.
4. ▭ SQUELCHED CONDITION VOLTAGE READING.
5. ⬭ RF VOLTAGE READINGS TAKEN WITH BOONTON 91C RF VOLTMETER (0.01 PROBE). UNMODULATED 3.7 WATT RF POWER OUTPUT.
6. ALL VOLTAGES ON DIODES SHOWN IN RECEIVE CONDITION.
7. S2A AND B ARE SHOWN IN CHANNEL ONE POSITION AS VIEWED FROM THE KNOB END OF SHAFT.

⚠ S100 AND ASSOCIATED CIRCUITRY LOCATED BETWEEN J3 AND S1 AS PER DETAIL ⚠. MESSENGER 123SJ CIRCUIT GROUND IS ISOLATED FROM CHASSIS GROUND.

MESSENGER 123SJ SCHEMATIC DIAGRAM
(FOR UNITS WITH "B" OR LATER MODEL DESIGNATOR ON SERIAL NUMBER STICKER)

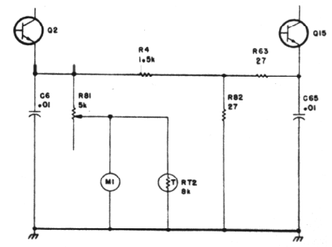

MESSENGER 123A METER CIRCUIT SCHEMATIC DIAGRAM

QUALITY ELECTRONIC PRODUCTS SINCE 1923

EXCELLENCE  THROUGH HALF A CENTURY OF EXPERIENCE.

E. F. JOHNSON CO.
WASECA, MINN. 56093

Printed in U.S.A. 11-75GP Part No. 001-0122-001