TABLE OF CONTENTS
Model 20 Plus

DESCRIPTION	PAGE NUMBER
OPERATING THEORY - PLL FREQ. SYNTHESIZER	1-4
FREQUENCY CHART (TABLE 1)	5
ALIGNMENT PROCEDURE	6-9
TEST EQUIPMENT SET-UP	10
VOLTAGE CHART, IC'S & TRANSISTORS	11
BLOCK DIAGRAM	12
PLL CIRCUIT BLOCK DIAGRAM	13
PARTS LAYOUT, PCB 401070C, 401264D, 401380C, 401919B, TOP VIEW	14
COMPOSITE LAYOUT, PCB 401070C, 401264D, 401380C, 401919B, TOP	15
PARTS LAYOUT, PCB 401070C, 401264D, 401380C, 401919B, BOTTOM VIEW	16
COMPOSITE LAYOUT, PCB 401070C, 401264D, 401380C, 401919B, BOTTOM	17
COPPER PATTERN, PCB 401070C, 401264D, 401380C, 401919B, BOTTOM	18
WIRING DIAGRAM	19
PCB 401070C WIRING DIAGRAM	20
I.C. DIAGRAMS, LM6416E, LC7131, TA7310P	21
I.C. DIAGRAMS, KIA7217AP, TL489CP, MC78L08CT	22
SEMICONDUCTOR PIN CONFIGURATION	23
EXPLODED VIEW PARTS LIST	24
EXPLODED VIEW	25
SCHEMATIC DIAGRAM	26
PARTS LIST	27

OPERATING THEORY OF PLL FREQUENCY SYNTHESIZER
FOR MODEL 20 PLUS

1. Fundamental Theory Of PLL Circuitry

The purpose of PLL (Phase Locked Loop) circuit is to generate multiple number programable frequencies from a signal reference frequency with quartz crystal accuracy.

A basic PLL circuit consists of reference oscillator, VCO, phase comparator and DC filter (low pass filter).

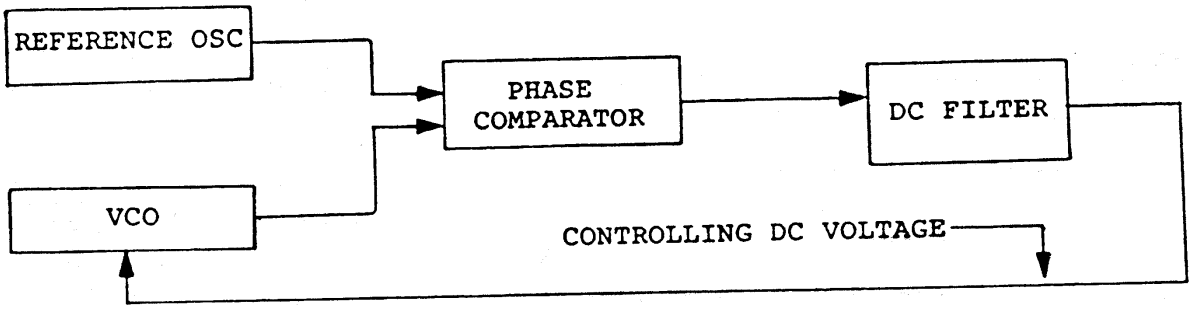

With the above circuit the VCO (Voltage Controlled Oscillator) frequency is effectively locked to the reference oscillator, and its accuracy is as good as the reference oscillator.

Since the CB radio's adjacent channel spacing is 10 kHz (or multiple of 5 kHz), our purpose should be to produce multiples of programable frequencies that are spaced apart by 10 kHz.

Therefore the basic PLL circuitry is expanded as follow:

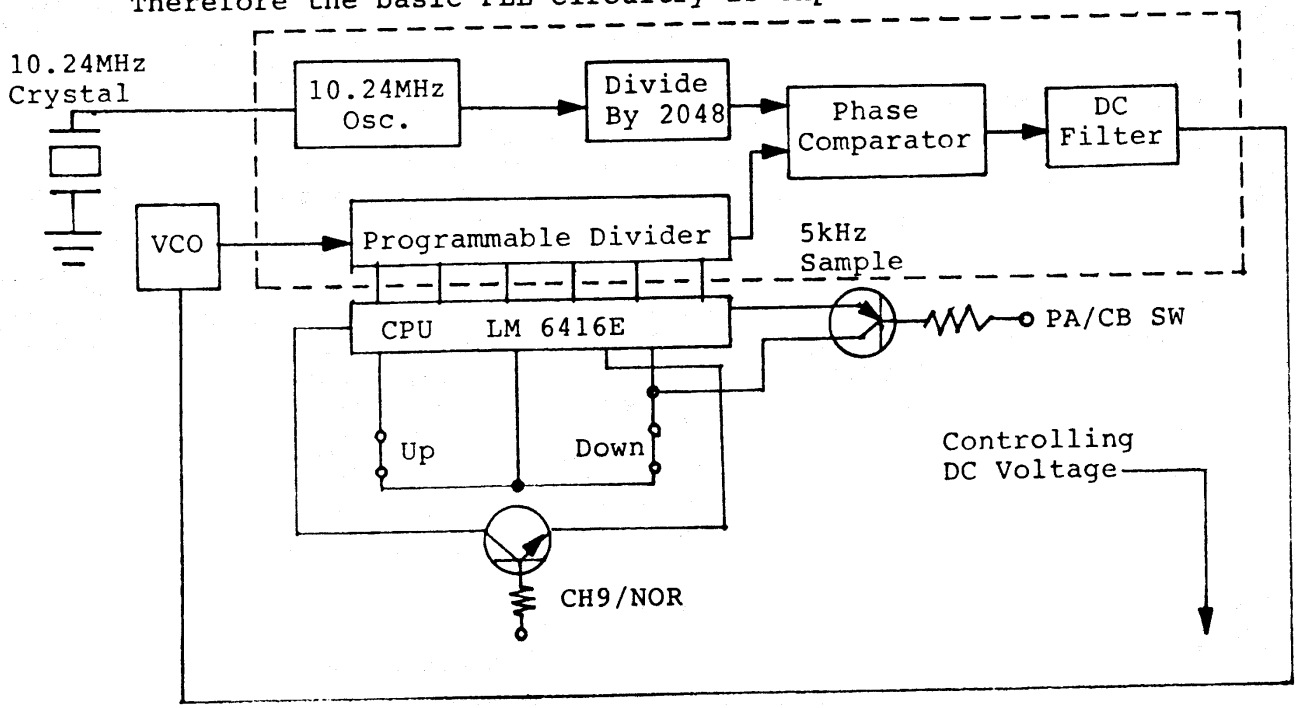

The most important part of VCO circuitry is a voltage controlled variable capacitor called varicap or varactor diode whose capacitance depends on DC voltage applied to its cathode.

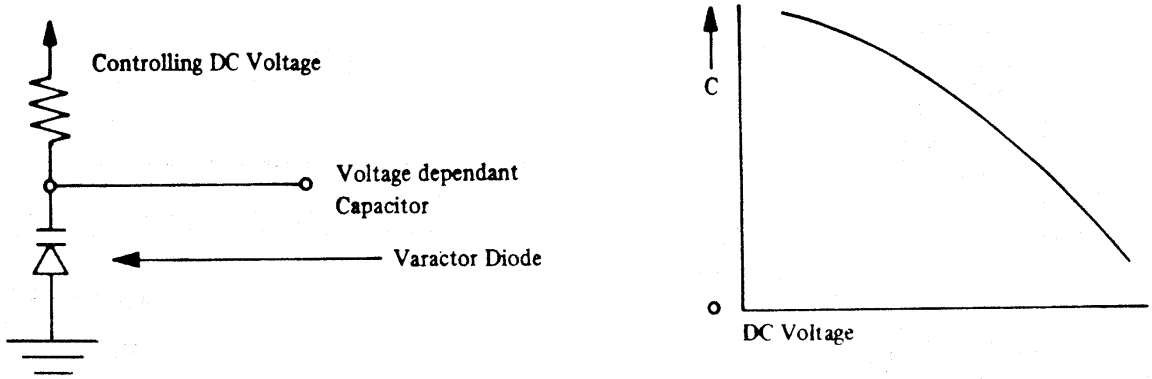

The varactor diode is responsible for setting VCO frequency, and once set it regulates the VCO frequency against the reference. The VCO frequencies are chosen in 16 to 17 MHz range as shown on table 1. To obtain transmit signal the VCO is mixed with 10.24MHz. As an example for channel 1:
10.24 + 16.725 = 26.965MHz

For receiver mode the VCO is used as a first local oscillator. Example, channel 1:
26.965 - 16.27 = 10.695MHz

The above first IF of 10.695MHz is mixed again with 10.24MHz crystal oscillator frequency which serves as the second local oscillator.
10.695 - 10.24 = 0.455MHz

As can be seen above the VCO frequency shifts from 16.725 to 16.27MHz when changed from transmit to receive for the same channel 1. The shift is accomplished by "read only memory" incorporated inside the PLL IC-202 between the selector switch and the VCO divider (programable). When transmit logic signal is applied to the IC-202 through pin 19, the programable divider will divide incoming VCO frequency by 3345 to produce 5kHz sampling signal. 16,725 ÷ 3345 = 5kHz

For the receiver mode the programable divider will automatically change to divide the VCO frequency by 3254.
16270 ÷ 3254 = 5kHz

Note that the reference frequency of 5kHz is obtained by dividing the 10.24MHz by 2048 times. (5kHz reference is used instead of 10kHz for division convenience). See table 1 for transmit/receive mode VCO frequencies.

2. Transmitter Circuit

IC202 (PLL-LSI), VCO section of IC204 (pins 1,2, and 3) are operational regardless of the receive or transmit mode. When the radio is set to the transmit mode, mixer/amplifier section of IC204 (pins 4,6,7 and 9), Q203, Q301, Q302 and Q303 are activated. The VCO frequency selected by the microprocessor is mixed with 10.24MHz to generate desired transmit frequency. The mixing is done by a balanced mixer circuit located inside the IC204.

EQUIVALENT CIRCUIT OF IC204

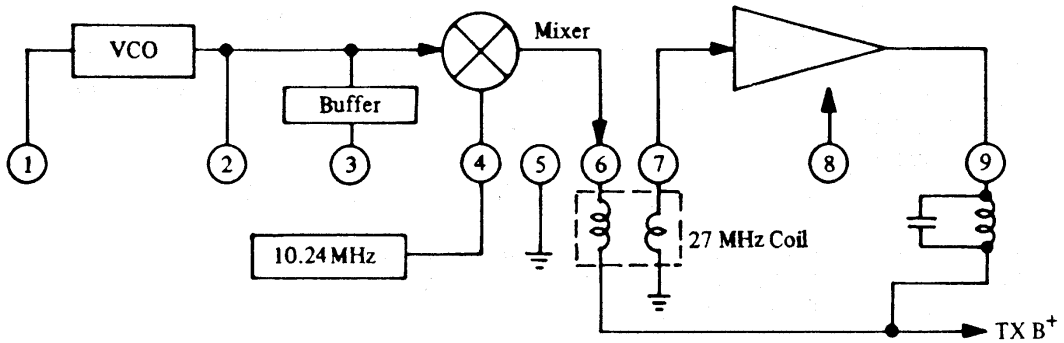

The resulting transmit frequency from pin 9 of IC204 is filtered by L301 and L302. Q301 is an amplifier/switch circuit. When VCO frequency is out of "LOCK" condition pin 14 of IC202 pulls down bias voltage of Q301 to ground disabling Q301 from passing possible illegal frequencies. Q302 is a RF power driver circuit and Q303 is the final RF power amplifier.

A modulation audio signal is applied to the collectors of Q302 and Q303 through an audio power transformer T501. The audio signal (mic input) is amplified by a single power IC501. The modulation limiting is accomplished by an automatic level control circuit which is as follows:

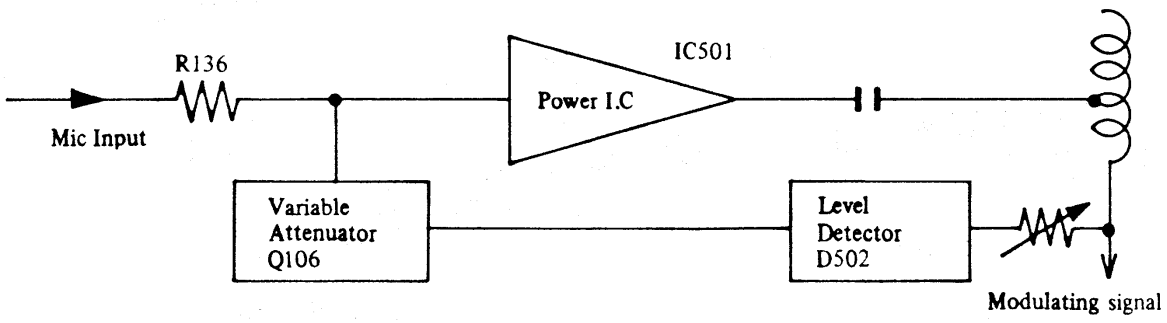

L305 and C317 are series resonator, and RFC303, L307, RFC304, C321, C322, C324 and C326 make up PI-LOW pass filter. C312 is factory selected and limits the RF output level to within the FCC limit of 4 watts.

3. Receiver Circuit

In the receiver mode of operation, Q203 transistor is turned off. Also bias voltage is applied to Q103 and a proper bias and AGC voltage is established to Q101, Q102, and Q103. Q101 is a 27MHz RF input amplifier and any excessive input signal is limited by diodes D101 and D102. The amplified 27MHz is mixed with VCO frequency selected by channel switch. For channel 1 VCO is set at 16.27MHz. The resulting first IF is 26.965 - 16.27 = 10.695MHz. Q102 is the first converter, and the 10.695MHz is sharply filtered by L103 and a ceramic filter CF1. The first IF is again mixed with a second local oscillator of 10.24MHz. 10.695 - 10.24 = 0.455MHz. Q103 is the second converter. Second IF is filtered by a razor sharp ceramic filter of CF2 coupled with L104. Q104 is a first 455kHz amplifier, with Q105 being the last amplifier. D103 is a detector diode which produces audio signal as well as a negative DC voltage for AGC action. The negative voltage also provides forward biasing to the cathode of ANL clipping diode of D106. The biasing voltage has a time constant determined by R124 and C123. Therefore, any sharp negative going pulse from D103 will back bias D106 and be clipped.

4. Channel Up/Down Operation

The PLL (TX/RX) frequency, channel number display, channel 9 select, and PA/CB mode select functions are controlled by a 4 bit microprocessor. The controls for channel selection are the Up and Down push buttons located on the front panel. Depending upon which button is pressed, instructions are given to the microprocessor to change the PLL frequency to the next channel. If the button is kept in the depressed position for approximately 1.2 seconds the microprocessor will then scan through the channels at a rate of approximately 5 channels per second.

During channel selection or scan function, the microprocessor inhibits the transmitter section of the unit, to prevent undesired signals from being radiated.

FREQUENCY CHART (Table 1)

CH NO	CHANNEL FREQ(MHz)	CRYSTAL OSC	VCO TX	VCO RX
1	26.965	10.24	16.725	16.27
2	26.975	"	16.735	16.28
3	26.985	"	16.745	16.29
4	27.005	"	16.765	16.31
5	27.015	"	16.775	16.32
6	27.025	"	16.785	16.33
7	27.035	"	16.795	16.34
8	27.055	"	16.815	16.36
9	27.065	"	16.825	16.37
10	27.075	"	16.835	16.38
11	27.085	"	16.845	16.39
12	27.105	"	16.865	16.41
13	27.115	"	16.875	16.42
14	27.125	"	16.885	16.43
15	27.135	"	16.895	16.44
16	27.155	"	16.915	16.46
17	26.165	"	16.925	16.47
18	27.175	"	16.935	16.48
19	27.185	"	16.945	16.49
20	27.205	"	16.965	16.51
21	27.215	"	16.975	16.52
22	27.225	"	16.985	16.53
23	27.255	"	17.015	16.56
24	27.235	"	16.995	16.54
25	27.245	"	17.005	16.55
26	27.265	"	17.025	16.57
27	27.275	"	17.035	16.58
28	27.285	"	17.045	16.59
29	27.295	"	17.055	16.60
30	27.305	"	17.065	16.61
31	27.315	"	17.075	16.62
32	27.325	"	17.085	16.63
33	27.335	"	17.095	16.64
34	27.345	"	17.105	16.65
35	27.355	"	17.115	16.66
36	27.365	"	17.125	16.67
37	27.375	"	17.135	16.68
38	27.385	"	17.145	16.69
39	27.395	"	17.155	16.70
40	27.405	"	17.165	16.71

ALIGNMENT PROCEDURE FOR CB TRANSCEIVER
MODEL 20 PLUS

TEST EQUIPMENT REQUIRED

All Test equipment should be properly calibrated.

1. Audio Signal Generator, 10Hz - 20kHz
2. VTVM 1mV measurable.
3. DC Ammeter, 2A
4. Regulated Power Supply, dc 0-20V, 2A or higher.
5. Frequency Counter, 0-40MHz, high input impedance type.
6. RF VTVM probe type.
7. Oscilloscope, 30MHz, high input impedance.
8. RF watt meter, thermo-couple type, 50 ohm, 5W.
9. Standard Signal Generator, 100kHz-50MHz, 50 ohm unbalanced.
10. Speaker dummy resistor, 8 ohm, 5W.
11. Circuit Tester, dc, 20kV ohm/V.

TEST CONDITIONS

Test voltage = 13.8Vdc +/-5%, unless otherwise specified.

PLL CIRCUIT ALIGNMENT

a. 10.24MHz Oscillator Check

Connect a frequency counter to IC202, pin 12 and check to see 10.240000MHz +/-100Hz.

When a defective crystal is replaced and if the frequency is higher than by 100Hz, C208 should be increased. If the frequency is lower, C208 should be reduced in capacitance.

With a factory supplied crystal a C208 value of 47 pFd should be sufficient, but on some sets minor value selection may be necessary.

b. VCO Alignment

1. Set the Radio to channel 40 and into the transmit mode (make certain 50 ohm dummy load or wattmeter is connected to the antenna terminal).

2. Connect a circuit tester between TP1 and ground.

3. Adjust L201 to obtain 4.5Vdc.

4. Set the Radio to channel 1 and into the receive mode.

5. Check to see that the TP1 dc voltage drops to a level between 0.6 and 1.0 volts. As long as the dc level stays between 4.5Vdc for transmit on channel 40 and 0.6 to 1.0Vdc for receive on channel 1, the VCO is set properly.

   The magnitude of the TP1 voltage swing is determined by C216 at the factory. The optimum value of C216 was found to be around 82 pFd. C216 with a value larger than 82 pFd will reduce the voltage swing magnitude and vice versa for a smaller value. If the lower value drops only to 1.5Vdc, then a C216 of 82 pFd should be reduced to increase the range. This should not be necessary when factory supplied parts are used for D208 (Varactor Diode) and L201 (VCO Tuning Coil).

TRANSMITTER ALIGNMENT

a. Test Set-up

Refer to the diagram shown below:

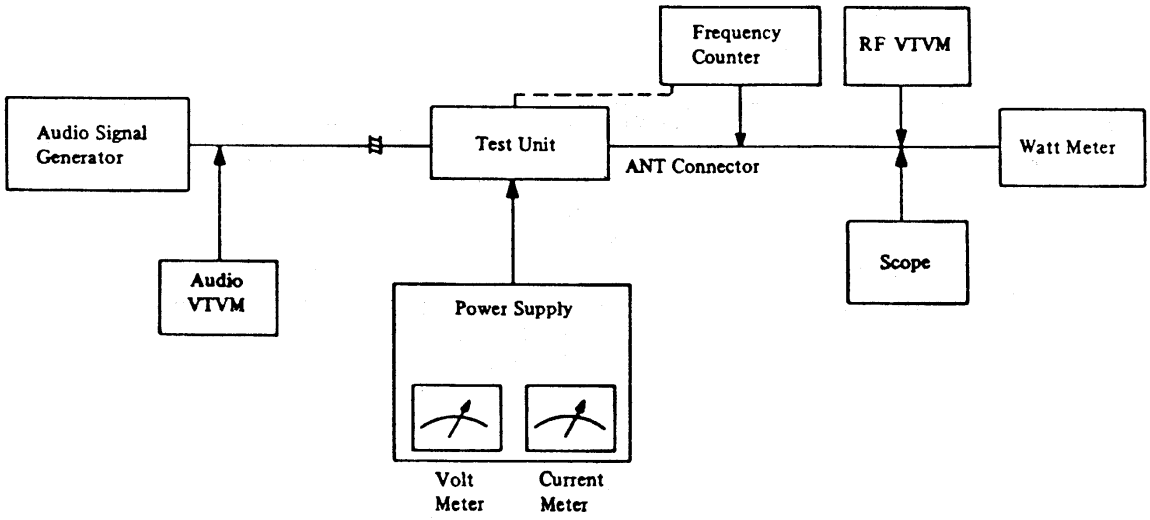

Transmitter Alignment Set Up

Note:

1. When connecting audio cable to the microphone input circuit, always use shielded cable.

2. When making alignment for RF power output, always use the supplied dc cable.

b. RF Amplifier Stage Alignment

1. Reduce power supply voltage to 9.0V.

2. Set channel selector to 19 and connect the oscilloscope to the antenna connector through a suitable connection pad.

3. Adjust L301, L302, L303 and L304 for maximum amplitude of the scope display.

4. Increase the power supply voltage to 13.8V, and then adjust L305 and L307 until the watt meter indicates 3.8W.

5. Measure the transmit power output at all channels, and make sure that the power output difference between any channels is less than 0.3W.

6. Measure the transmit frequency at all channels, and make sure that the frequency is within +/-800Hz from the assigned channel center frequencies.

c. Transmit Frequency Check

1. Set the radio into transmit mode with no modulation.

2. Connect the frequency counter to the antenna load or to the tab provided at the watt meter.

   The frequency should be within +/-800Hz from each channel center frequency as tabulated in Table 1.

d. Modulation Sensitivity Alignment

1. Set the unit to transmit mode of operation. Feed 1kHz, 30mV signal to the microphone input circuit, and adjust RV501 so that 100% modulation is obtained.

2. To set the transceiver into transmit mode without a microphone, insert the plug, wired as shown below, into the MIC jack on the transceiver. When applying the audio modulation signal to the microphone input circuit, use the same plug.

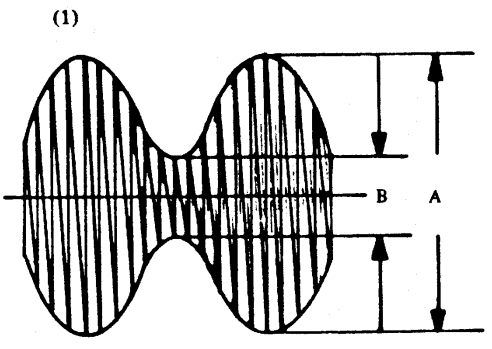

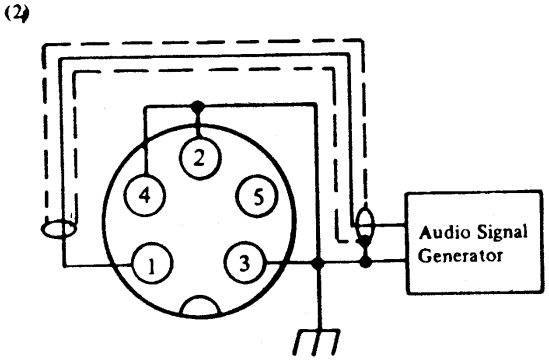

Modulation ratio = $\frac{A-B}{A+B}$ x 100 (%)

Mic Plug wiring for modulation

3. Next, reduce the signal input level to 3 mV, and make sure that the modulation is higher than 60%.

RECEIVER CIRCUIT ALIGNMENT

a. Test Set-up

Refer to the diagram shown below:

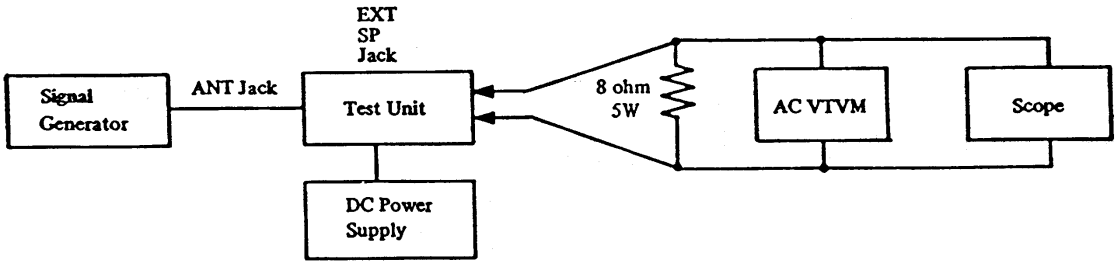

RECEIVER ALIGNMENT SETUP

b. Sensitivity Alignment

1. Set the signal generator to provide 27.185MHz, 1kHz, 30% modulation. Set the channel selector to 19.

2. Adjust L101, L102, L103, L104 and L105 for maximum audio output across the 8 ohm dummy load resistor. This alignment should be performed by gradually decreasing the generator output signal to the minimum level required for tuning to avoid inaccurate alignment due to AGC action.

c. Squelch Circuit Alignment

1. Set a 50 ohm signal generator to generate a signal on channel 19 with an output level of 1000 microvolts, modulated 30% with a 1kHz tone.

2. Rotate the squelch control in full clockwise direction.

3. Temporarily adjust RV101 for maximum audio output, and note the audio output level. Then adjust RV101 so that the audio output level decreases by 6db.

4. Next, reduce the antenna input signal level to between 794 and 447 microvolts. The receiver should squelch. (The audio output level should drop to zero.)

5. Reduce the antenna signal input level to zero, and adjust the SQ control until the noise output just disappears.

Test Equipments Setup

PLL AND CARRIER SECTION

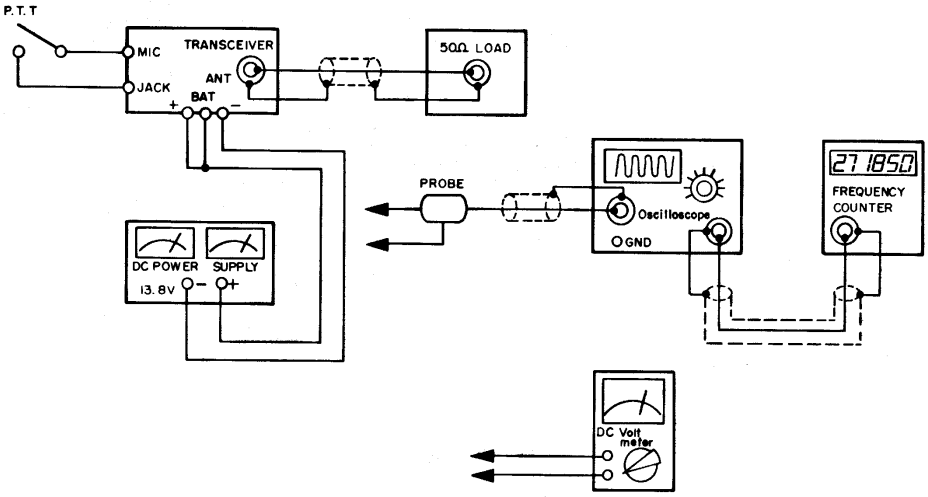

RECEIVER SECTION

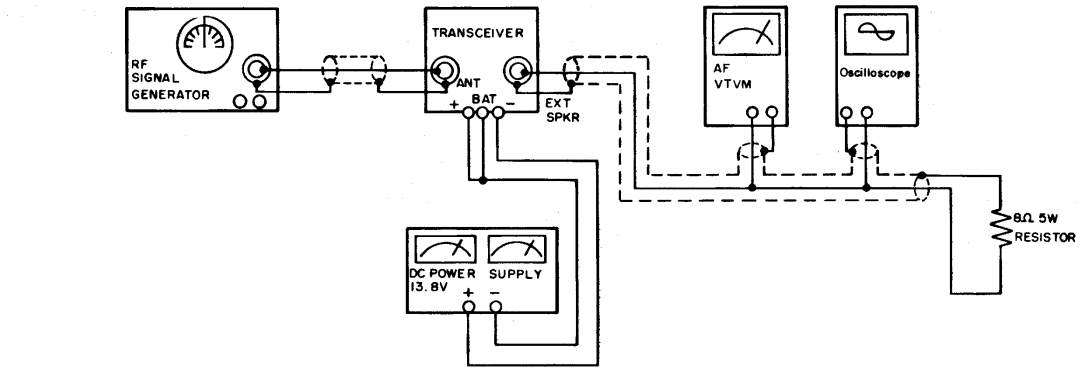

TRANSMITTER SECTION

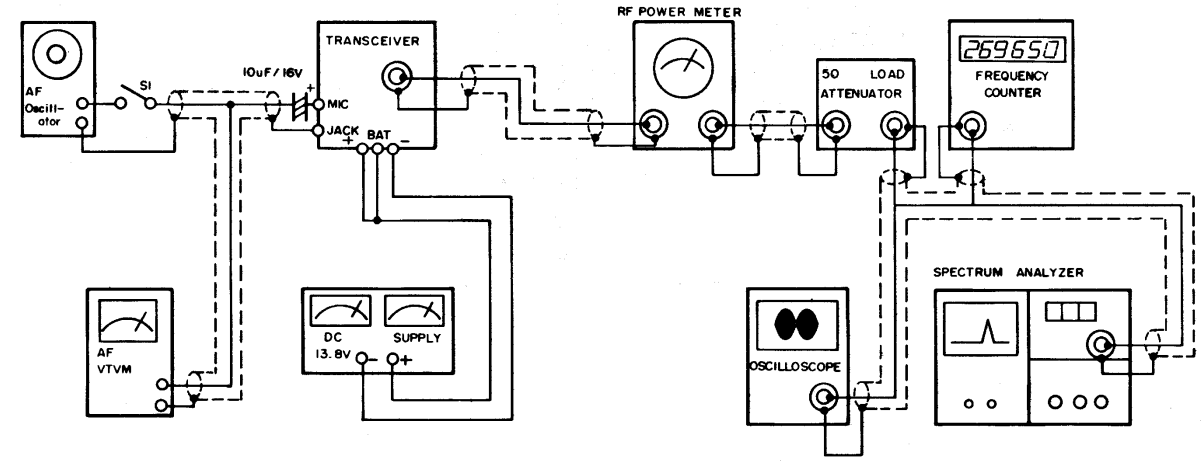

Voltage Chart

CONDITIONS MEASURED ON CH19
NO SIGNAL
NO MODULATION

1) TRANSISTORS

TR NO		B	E	C
Q101	RX	1.65	0.96	12.80
	TX	0.34	3.94	12.72
Q102	RX	1.63	0.90	11.85
	TX	0.24	0	12.70
Q103	RX	1.60	1.01	11.0
	TX	0.34	0.01	12.67
Q104	RX	1.07	0.38	3.29
	TX	0.09	0	0.81
Q105	RX	3.29	2.59	12.90
	TX	0.81	0.17	12.67
Q106	SQH	0.7	0	0
	SQL	0		
	TX	0	0	0.06
Q107	RX	0.62	0	0.71
	TX	0.62	0	0.71

TR NO		B	E	C
Q201	RX	7.82	8.05	2.51
	TX	7.81	8.20	2.48
Q202	RX	7.78	8.05	2.53
	TX	7.84	8.10	2.56
Q203	RX	7.95	7.95	0.91
	TX	7.16	7.94	7.81
Q204	RX	6.43	3.07	0
	PA	4.81	5.46	5.45
	TX	6.46	3.08	0.04
Q205	RX	0	0	3.08
	TX	0	0	3.11
Q301	RX	0.33	0	13.18
	TX	1.39	0.81	12.87
Q302	RX	0	0	13.5
	TX	0	0	10.61

TR NO		B	E	C
Q303	RX	0	0	13.10
	TX	0	0	11.74
Q401	RX	5.78	5.16	13.18
	TX	5.78	5.14	13.03
Q402	RX	7.94	7.95	0
	TX	7.93	7.94	0
Q403	RX	0	0	0
	TX	0	0	0
Q404	RX	0.42	0	7.80
	TX	0.40	0	7.79
Q501	SQH	0.37	0	2.51
	SQL	0.68	0	0.05
	TX	0.68	0	0.05
Q502	SQH	0.65	0	0
	SQL	0.19	0	0.68
	TX	0.1	0	0.68

2) IC

IC NO	IC 201													
PIN	1	2	3	4	5	6	7	8	9	10	11	12	13	14
RX	0.21	0.21	2.38	6.0	2.0	2.0	NC	5.13	6.44	0.07	0.07	6.46	0	0
TX	0.21	0.22	0.41	5.93	2.05	2.0	NC	5.15	6.49	0.07	0.07	6.50	0	0
PIN	15	16	17	18	19	20	21	22	23	24	25	26	27	28
RX	6.45	0.07	8.11	0.03	5.92	5.14	0	0	0	0.67	3.08	3.08	5.23	3.08
TX	6.49	0.07	8.1	0.03	5.88	5.16	0	0	0	7.81	3.11	3.10	5.28	3.08

IC NO	IC 202										IC401			
PIN	1	2	3	4	5	6	7	8	9	10	1	2	3	4
RX	6.44	0.07	0.07	6.46	6.45	0.07	NC	NC	NC	1.45	0	10.81	11.45	10.75
TX	6.48	0.07	0.07	6.50	6.49	0.07	NC	NC	NC	4.10	0	0.06	0.06	0.07
PIN	11	12	13	14	15	16	17	18	19	20	5	6	7	8
RX	2.83	3.83	0	1.45	1.74	1.74	1.37	7.57	3.85	7.19	10.88	11.15	12.80	0
TX	3.23	3.83	0	4.10	1.60	1.61	3.06	7.59	3.31	0.81	0.08	0.08	11.55	1.31

IC NO	IC203			IC501									
PIN	1	2	3	1	2	3	4	5	6	7	8	9	10
RX	2	0	0	13.80	12.60	3.90	8.15	1.51	3.38	3.40	1.28	0	6.86
TX	3	7.95	7.94	13.50	12.28	3.90	8.02	1.51	3.30	3.33	1.27	0	6.72

IC NO	IC 205													
PIN	1	2	3	4	5	6	7	8	9	10	11	12	13	14
RX	0	4.8	5	0	4.8	0	0	NC	NC	NC	NC	NC	NC	5
TX	0	4.8	5	0	4.8	0	0	NC	NC	NC	NC	NC	NC	5

IC NO	IC 204								
PIN	1	2	3	4	5	6	7	8	9
RX	2.64	1.96	1.37	1.78	0	1.27	2.12	5.10	1.27
TX	2.56	1.90	1.37	2.56	0	7.08	2.02	5.50	7.08

Block Diagram

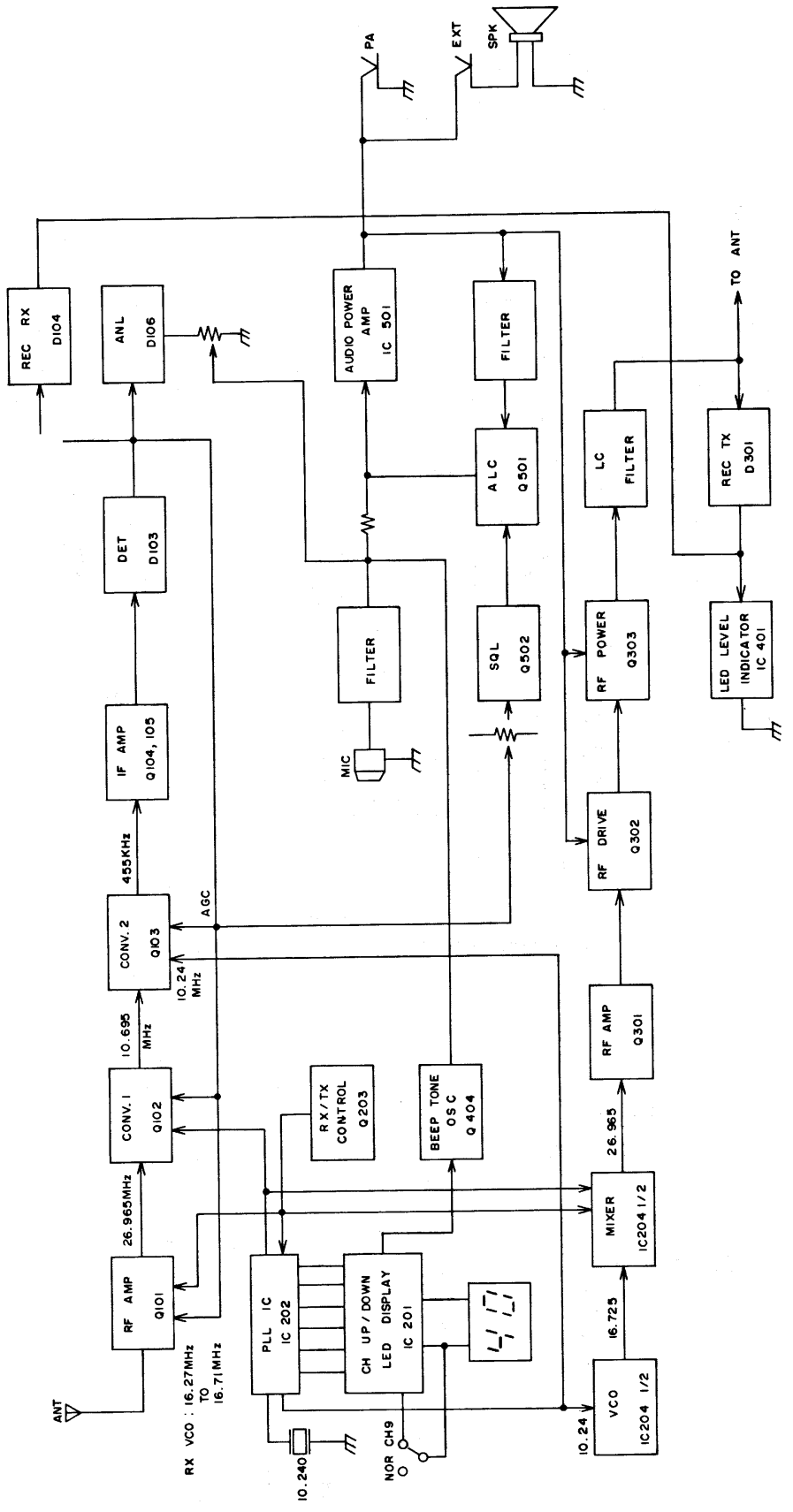

PLL Circuit Block Diagram

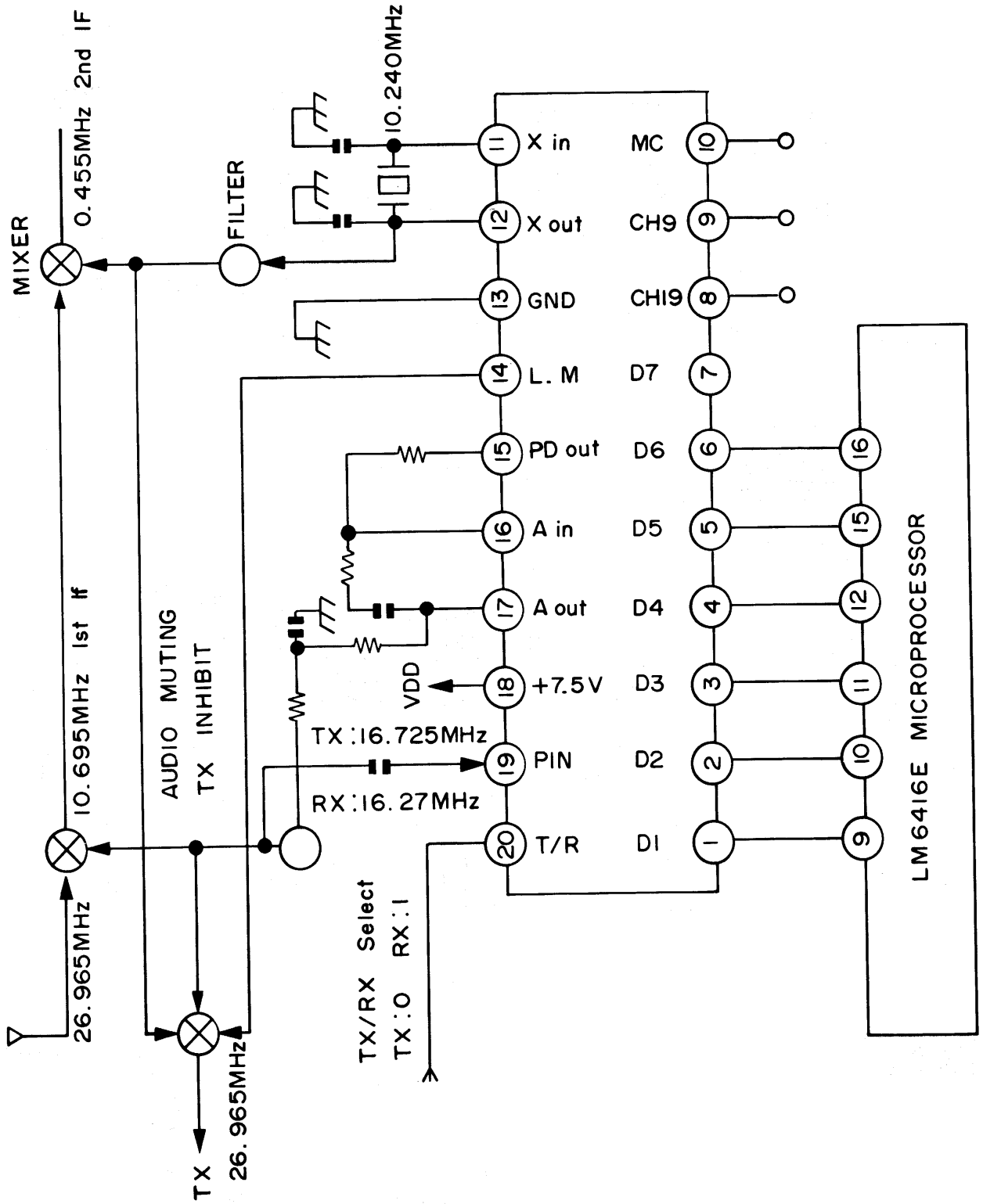

P.C.B Top View

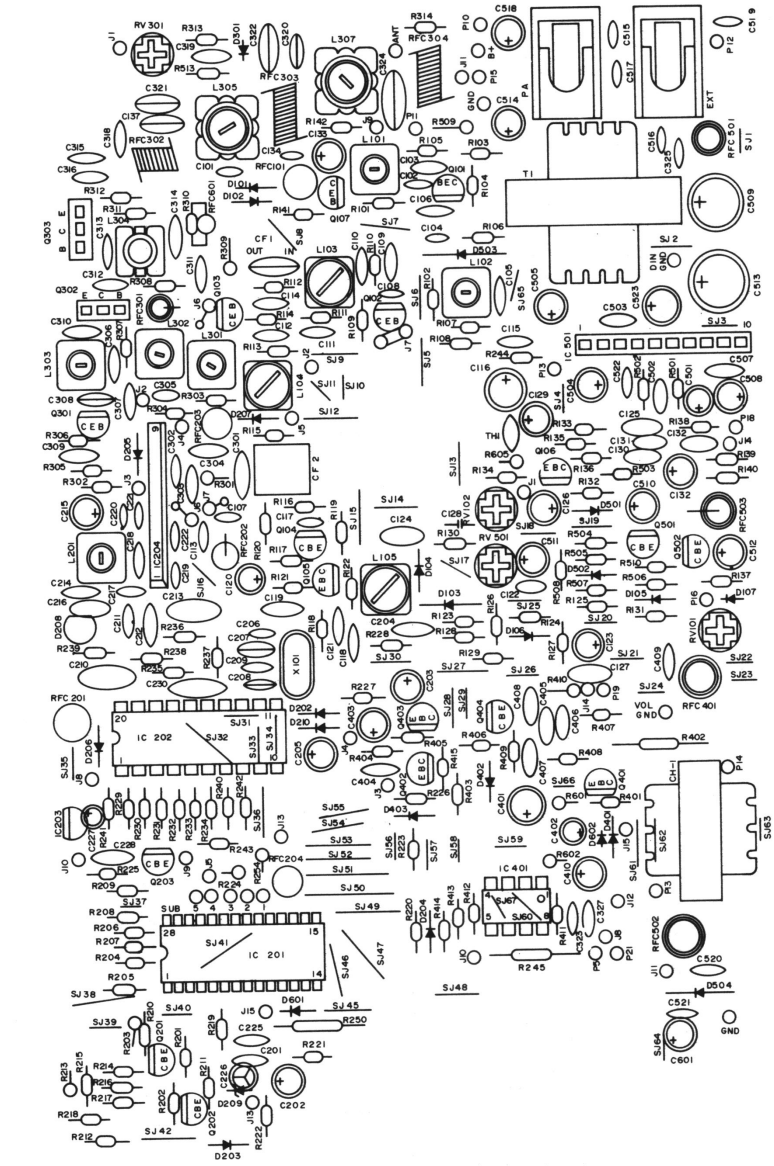

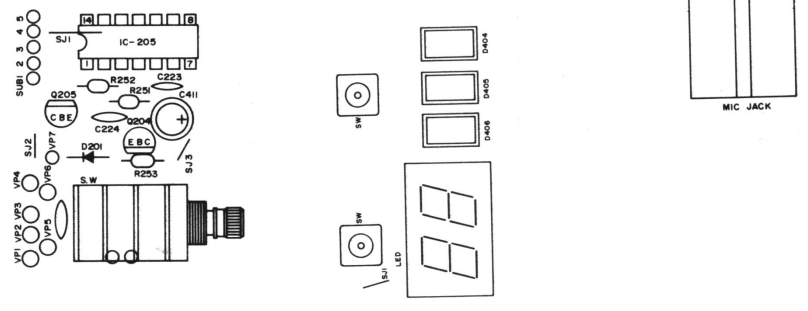

P.C.B Top View

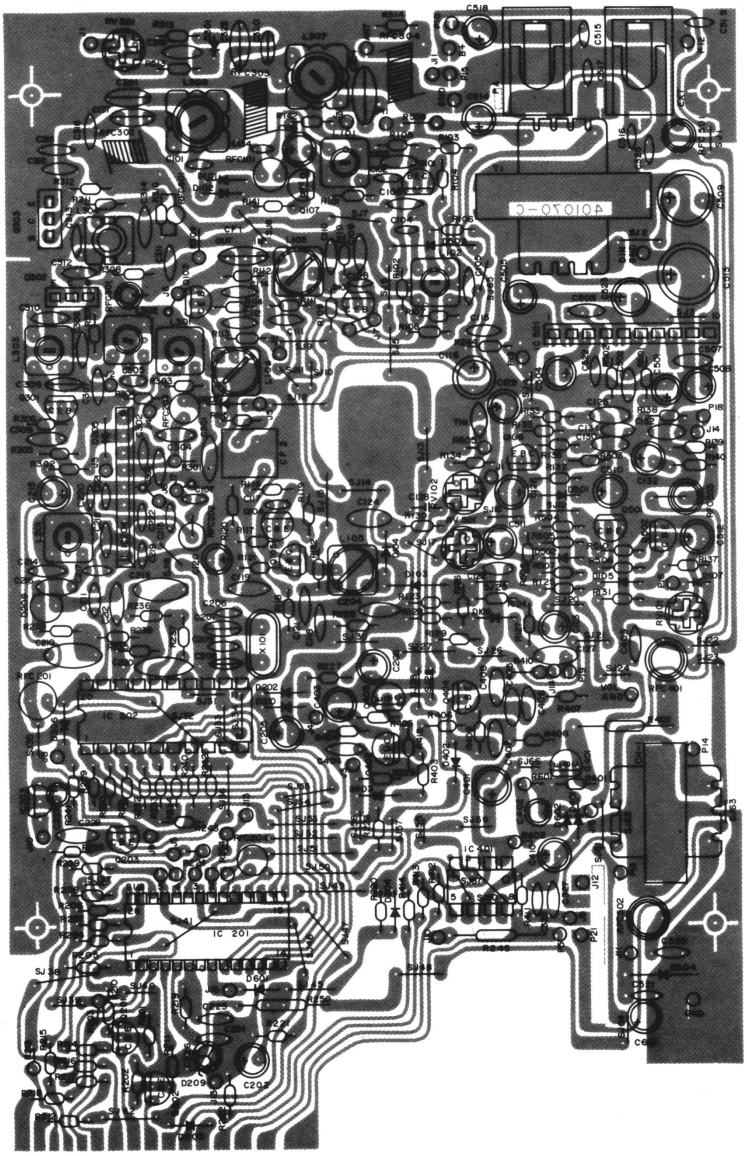

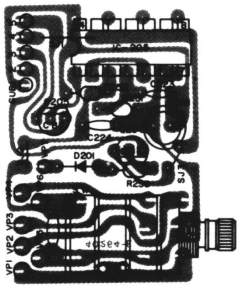

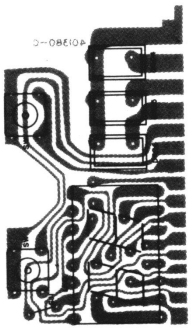

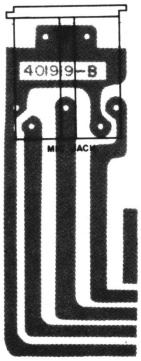

P.C.B Bottom View

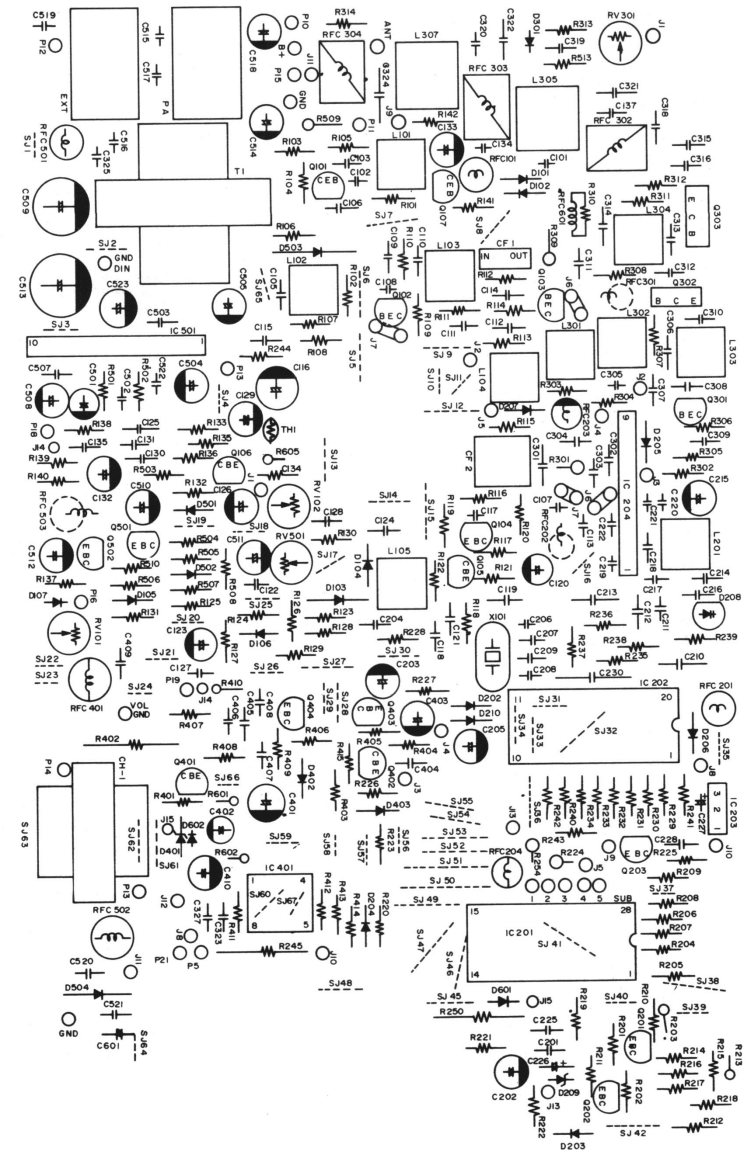

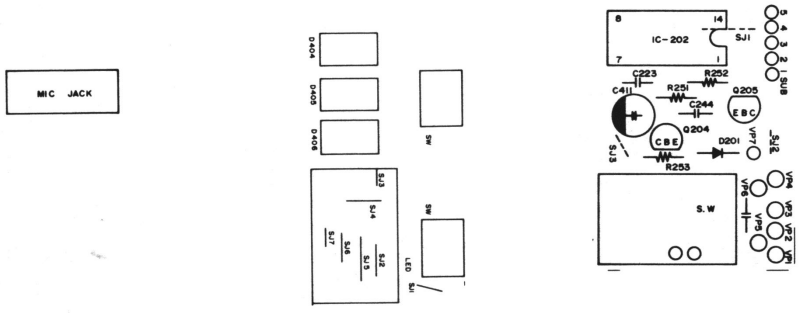

P.C.B Bottom View

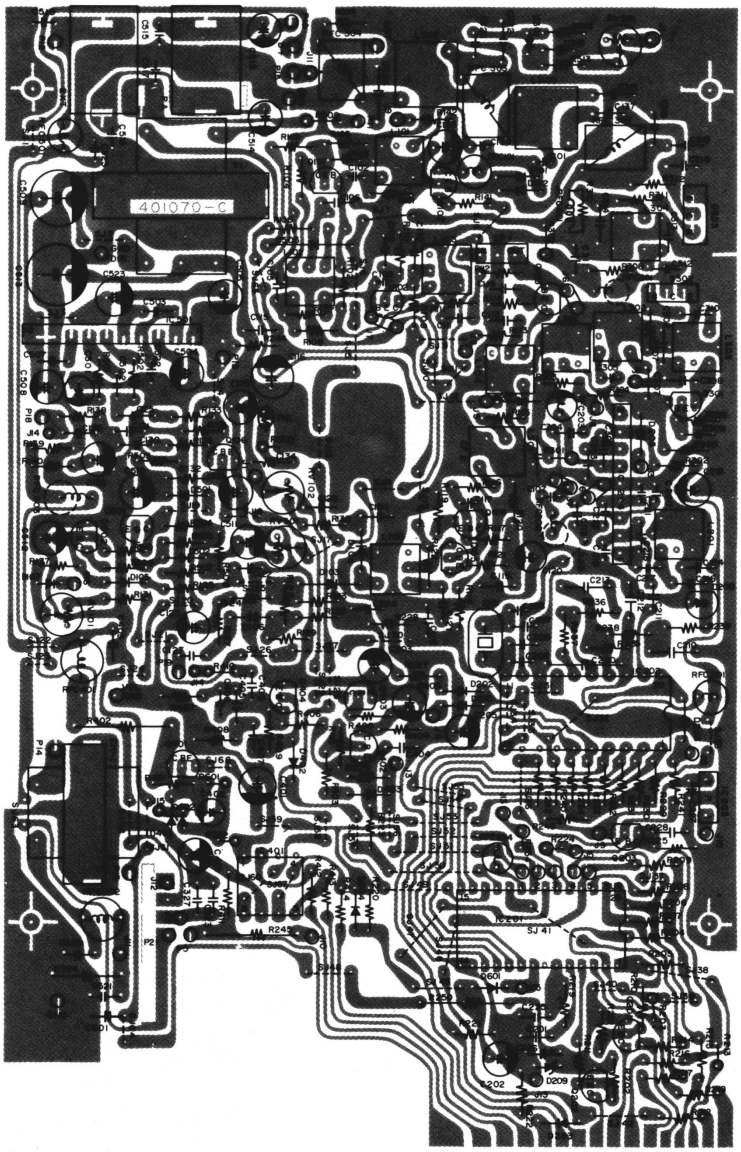

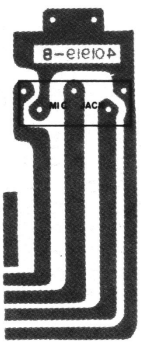

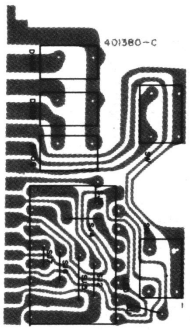

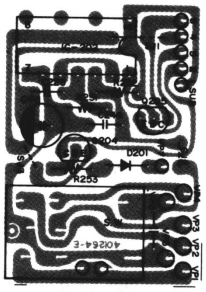

COPPER PATTERN

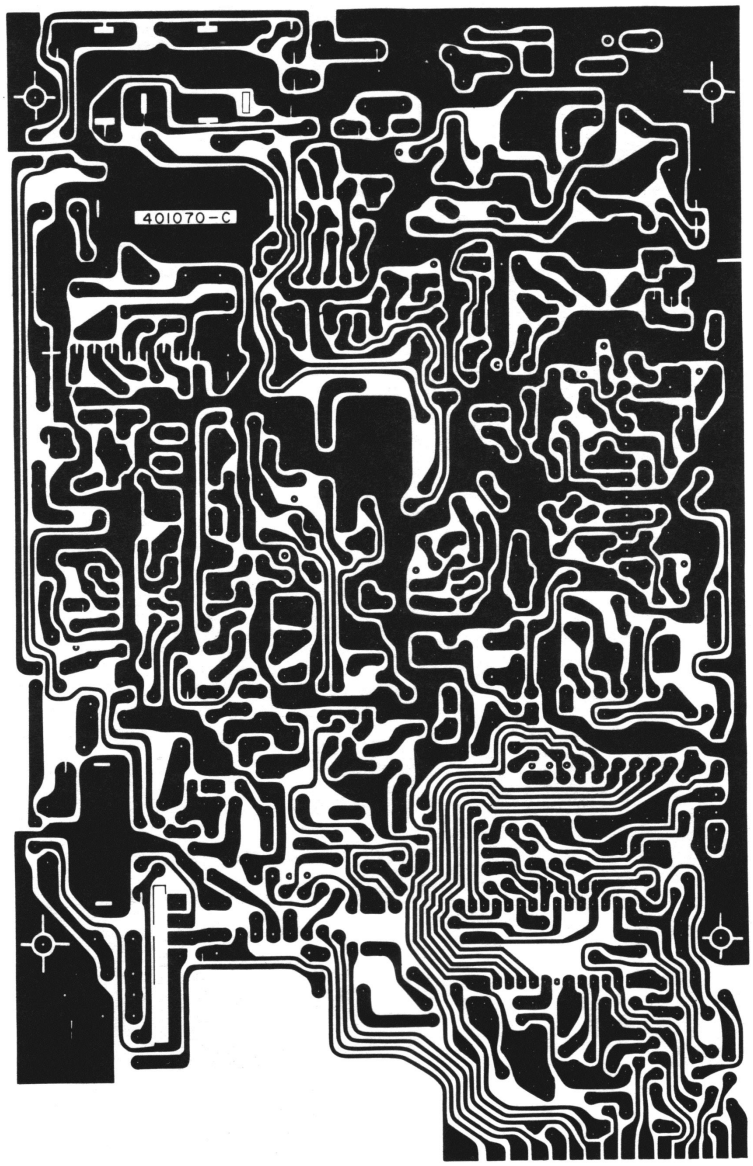

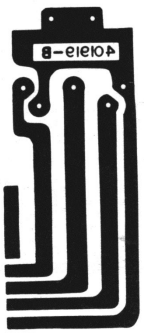

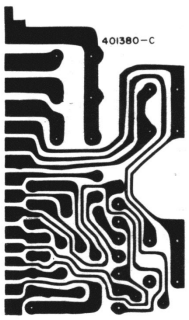



Wiring Diagram

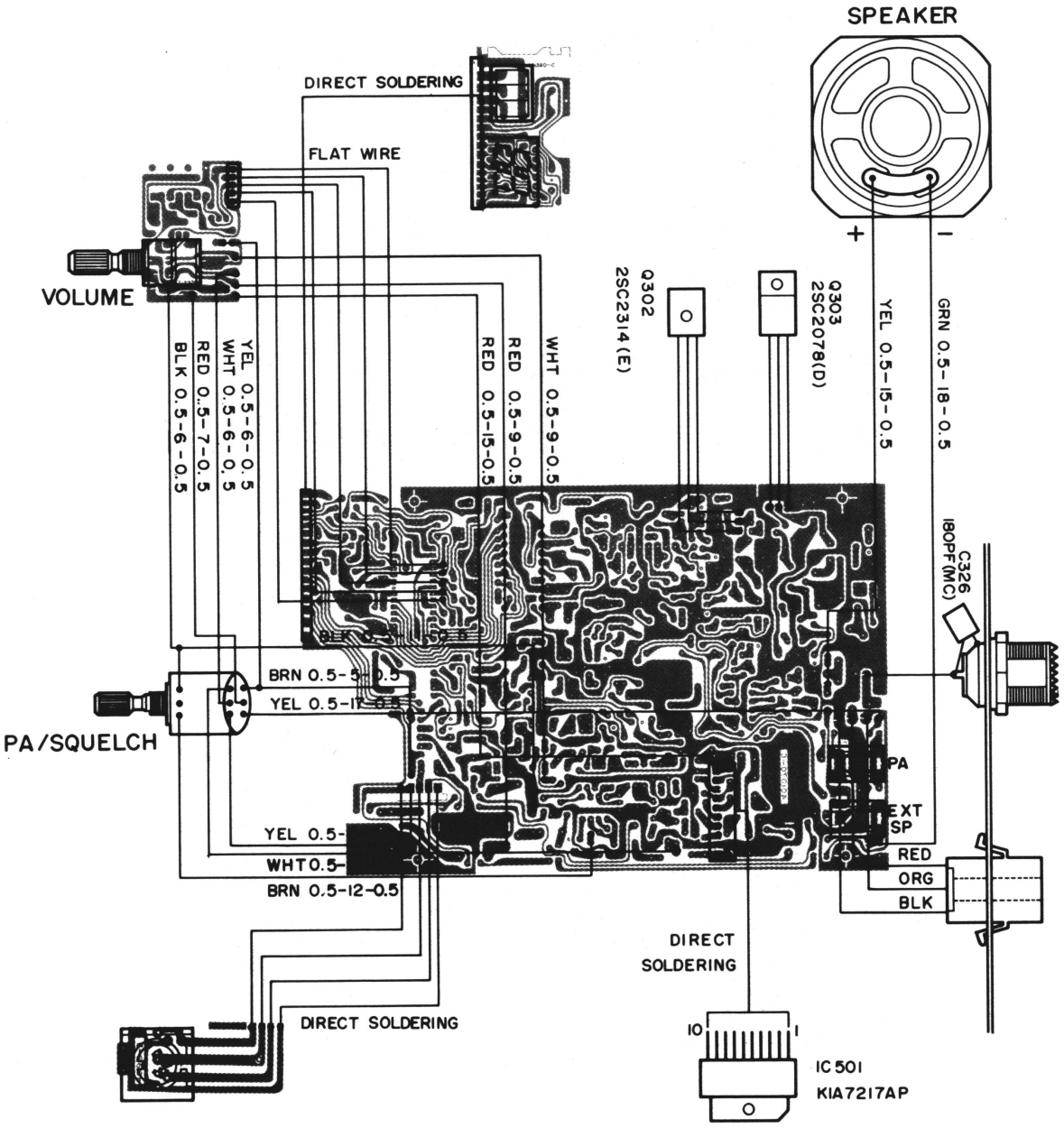

P.C.B Wiring Diagram

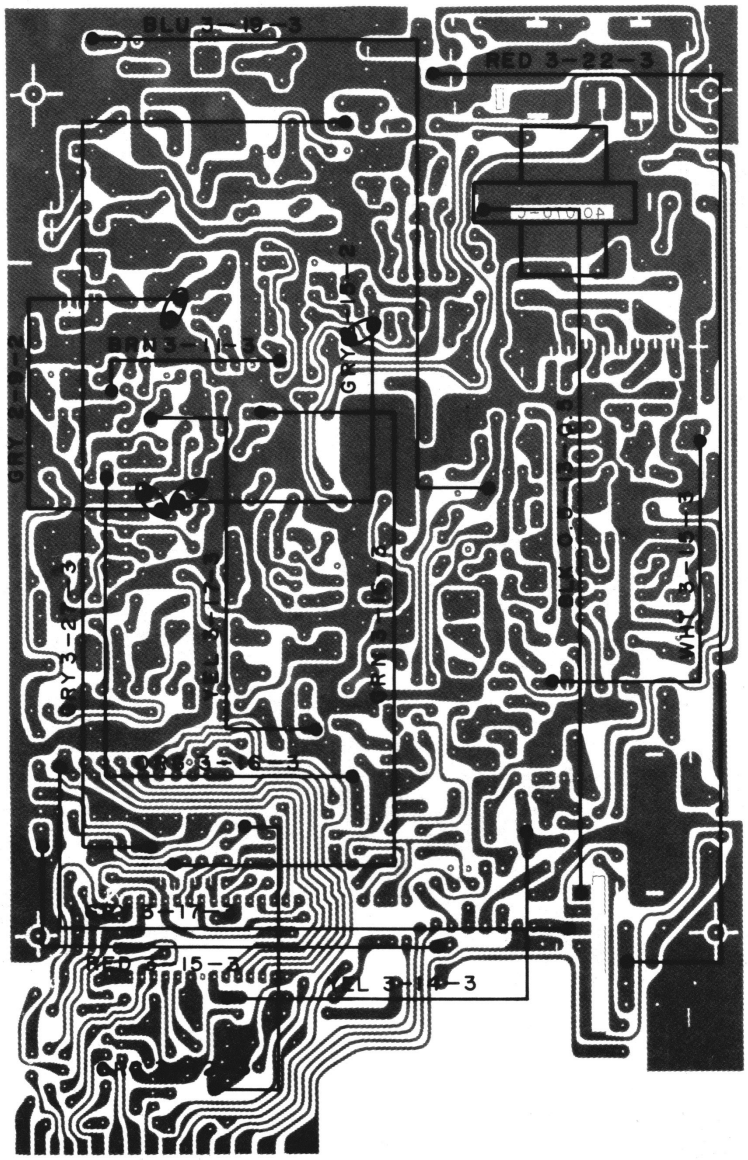

LM6416E

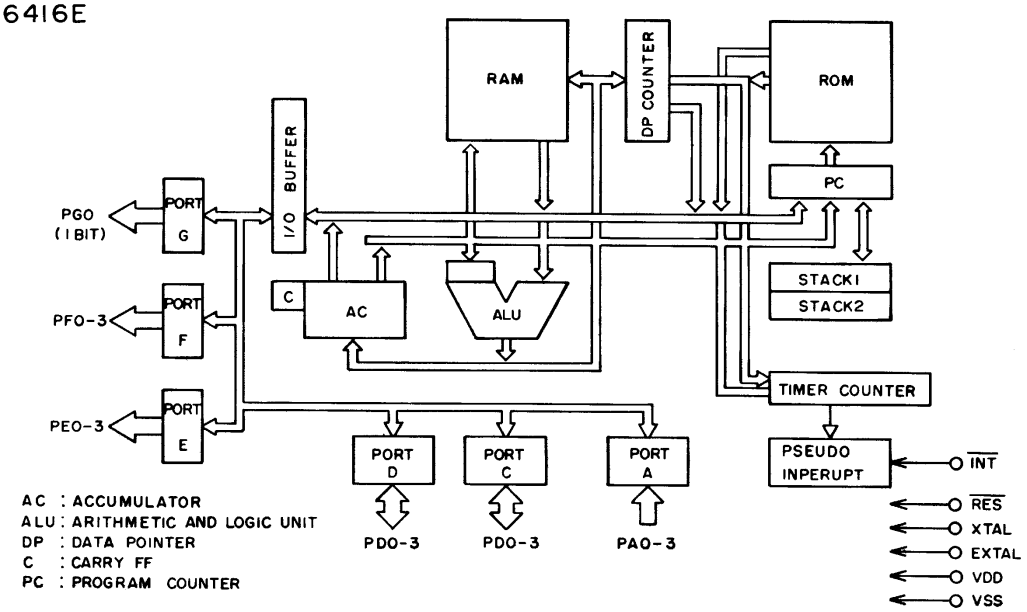

LC 7131

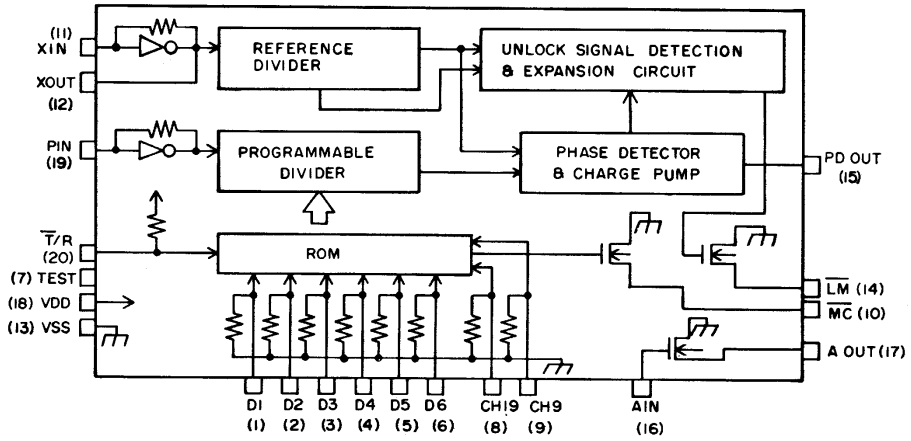

TA7310P

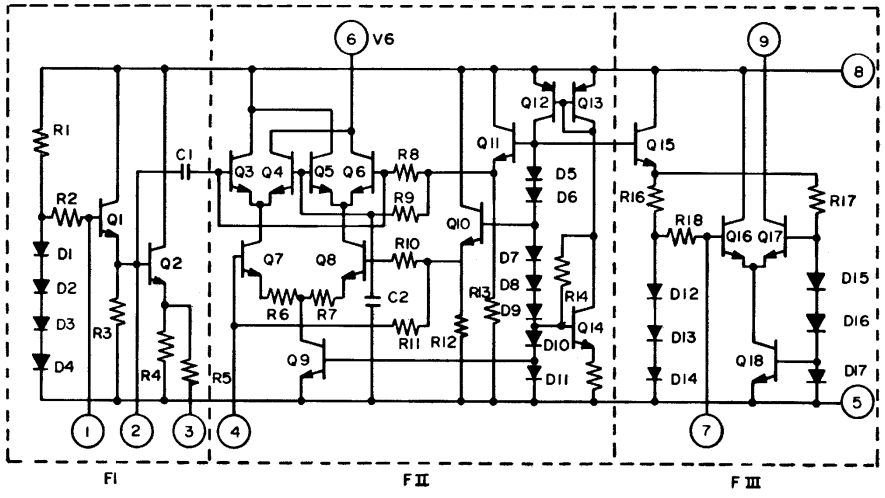

KIA 7217AP

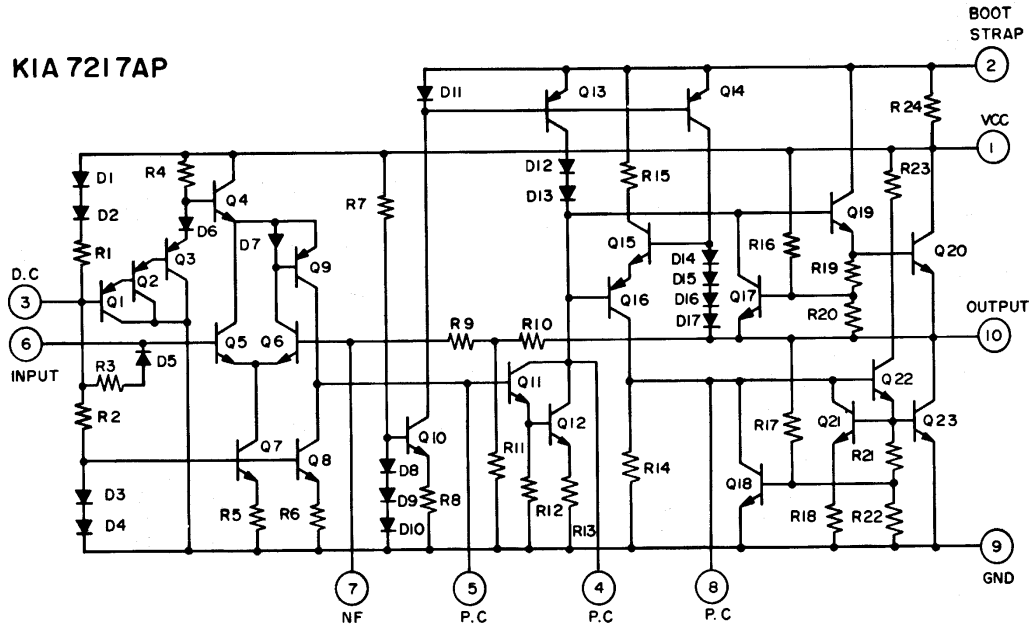

D.C : DECOUPLING
P.C : PHASE COMPENSATION

TL 489 CP

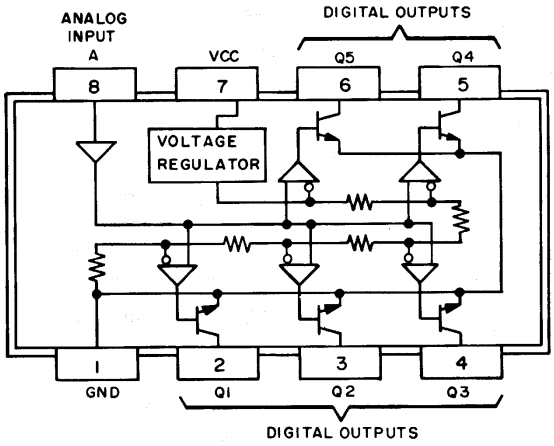

LOGIC DIAGRAM (1/2 OF DEVICE SHOWN)

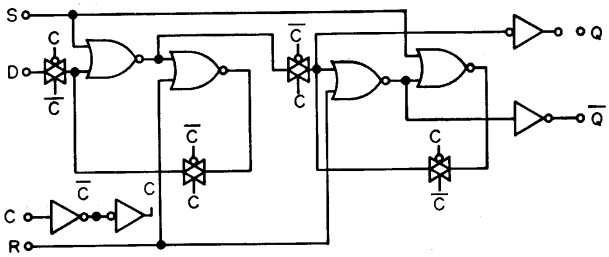

MC 78L08CT

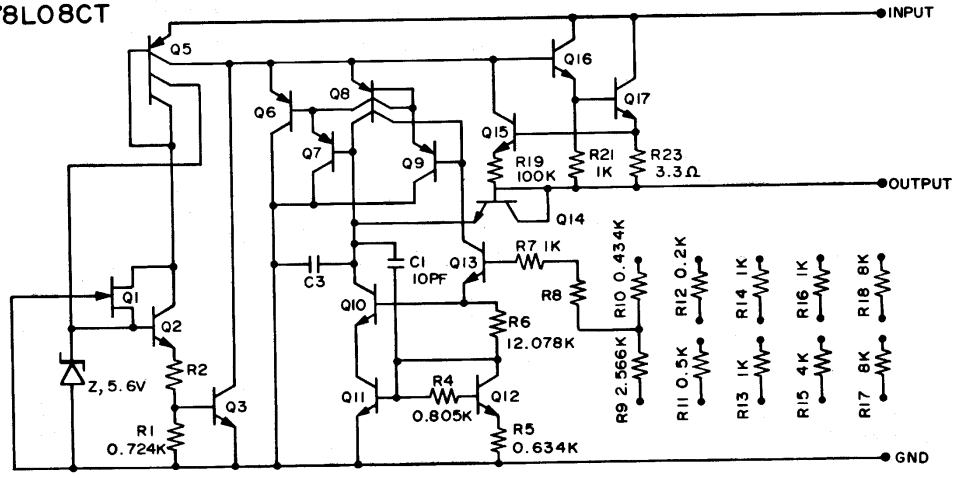

INTEGRATED CIRCUIT

KIA7217AP

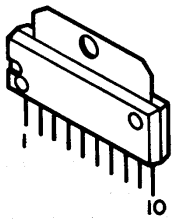

TA7310P

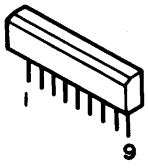

LC7131

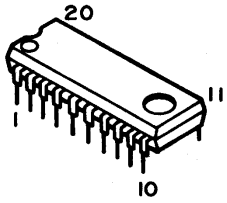

LM6416E

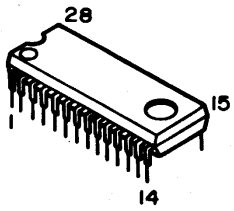

TL489CP

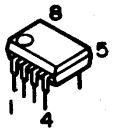

MC78L08CT

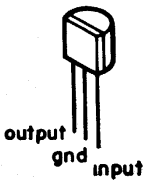

MC14013

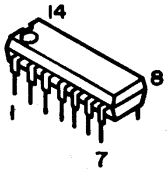

TRANSISTORS

MPS9418
MPS9623
MPS9631
MPS9681
MPS9634



MPS9426



2SC2314



2SC2078



DIODES

IN4002
IS2473
0A90

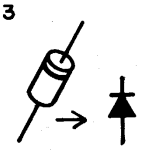

UZP-8.2B
BZX83-C5V6

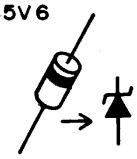

MV2209

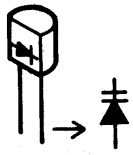

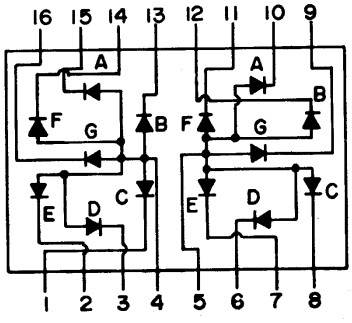

LTD-482G-Y

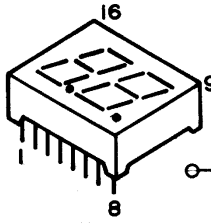

LD-001VR

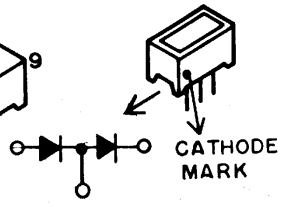

Exploded View Parts List

No.	Part No.	Part Name and Description
1	800-970	Escutcheon ABS 94HB BLK WHT Silk
2	880-880	Spring 4øx4.4øx5m
3	823-870	Knob (Up)
4	823-871	Knob (Down)
5	823-880	Knob (Vol. SQ)
6	813-030	Lens (Front)
7	955-330	Label (Lens)
8	770-790	Shield Plate
9	892-450	Rubber Holder (Bar LED)
10	252-021-6	LED Display LD-001MG GRN
	252-022-7	LED Display LD-001VR RED
	252-023-8	LED Display LD-001YY YEL
11	252-026-1	LED Display LTD-482G-Y
12	434-003-6	Touch S.W
13	401-380-C	P.C.B LED 45x26x1.6T
14	421-513-2	5 Pin DIN Connector Print
15	401-919-B	P.C.B DIN Socket 50x19x1.6T
16	904-400	Insulation Plate
17	701-410	Front Body SPC 35x129x1T
18	450-409-6	Resistor Variable K161110-5M1222-10KC
19	450-612-2	Resistor Variable K122150-50KA
20	992-440	ANT Receptacle (W/NUT Washer)
21	731-790	Holder (ANT MTG)
22	401-264-D	P.C.B SW 39.5x28.5x1.6T
23	701-420	Main Body
24	401-070-C	P.C.B Main 166x106x1.6T
25	420-134-8	Speaker CO65A20-G0062
26	830-043	Cap (Speaker)
27	901-785	Felt (Speaker MTG)
28	904-390	Insulation Plate
29	901-768	Felt Strip 10x110x0.3T
30	715-520	Bottom Cover
31	504-203	3P Plug Ass'y
32	760-870	Heat Sink (Large IC MTG)
33	222-006-4	I.C KIA 7217AP
34	204-009-1	Transistor 2SC 2078 (D)
35	760-740	Heat Sink (TR MTG)
36	441-004-5	Bushing (For T.R 2SC 2078)
37	760-704	Heat Sink (IC MTG)
38	420-707-6	Jeck Earphone
39	793-150	Name Plate
40	670-025	Rivet Blind
41	901-721	Plate Insulation Fiber
42	715-530	Upper Cover
43	720-916	Bracket (Set MTG)
44	660-138	Washer Rubber 7x1.5 BLK
45	600-051	Securing Screw
46	720-049	Bracket (MIC MIG)
47	440-010-5	MICA (For I.C KIA 7217AP)
48	440-004-0	MICA (For T.R 2SC2078)
49	441-010-0	Bushing (For I.C KIA 7217AP)
50	760-430	Heat Sink (T.R MTG)
51	750-215	Lug Terminal
52	623-265	(+) Tapping Screw (B.H)
53	651-024	Nut
54	662-305	Washer (Spring)
55	661-086	(+) Machine Screw (F.H)
56	663-082	(+) Taptite Screw (B.H)
57	611-086	(+) Machine Screw (F.H)
58	613-305	(+) Machine Screw (B.H)
59	623-168	(+) Tapping Screw (F.H)
60	624-066	(+) Tapping Screw (R.H)
61	625-007	(+) Tapping Screw (T.H)
62	664-411	Washer (Lock "B" Type)
63	664-518	Washer (Lock "B" Type)
64	440-005-1	MICA (For T.R 2SC2314)
65	204-016-7	Transistor 2SC2314 (E)

Exploded View

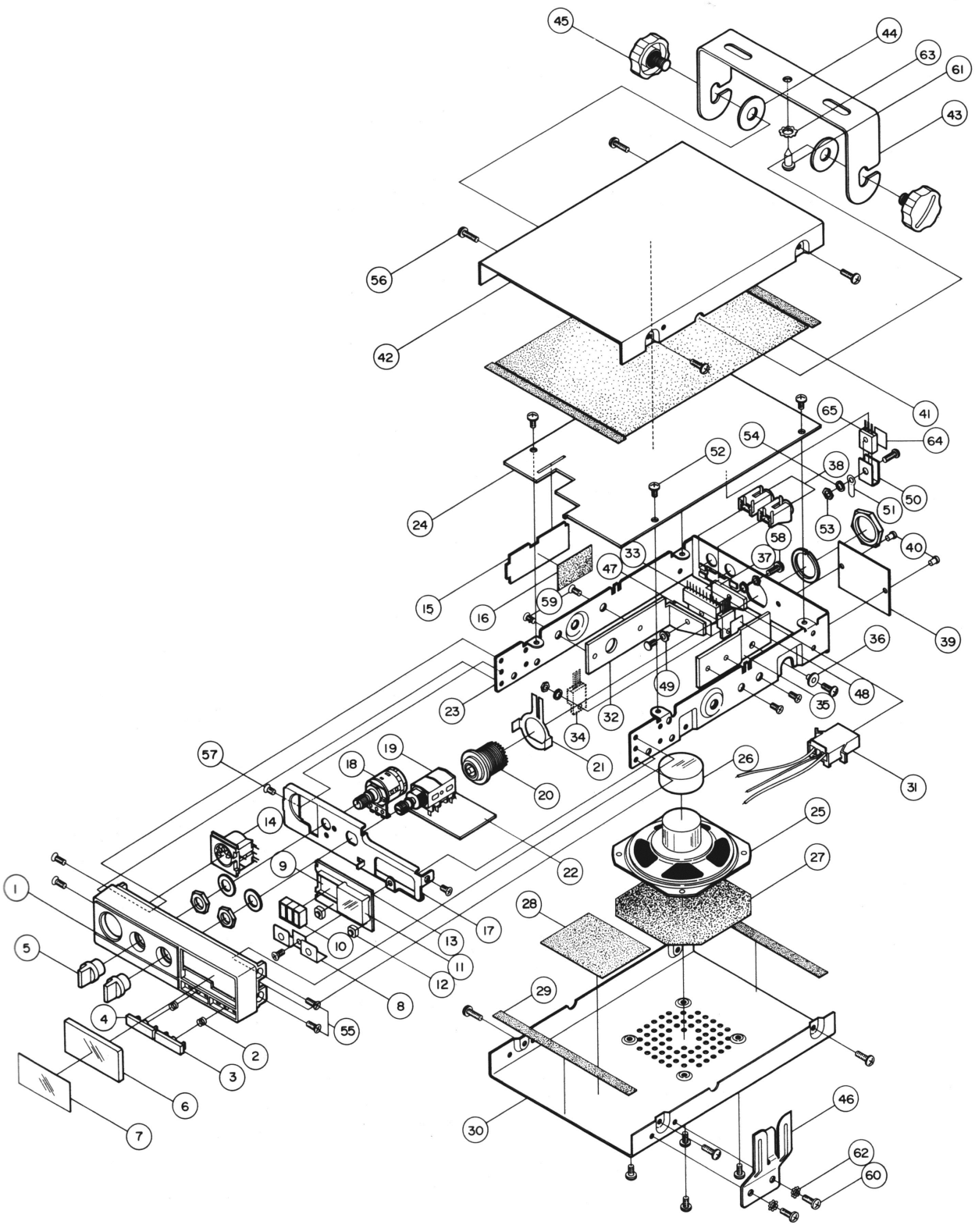

Schematic Diagram

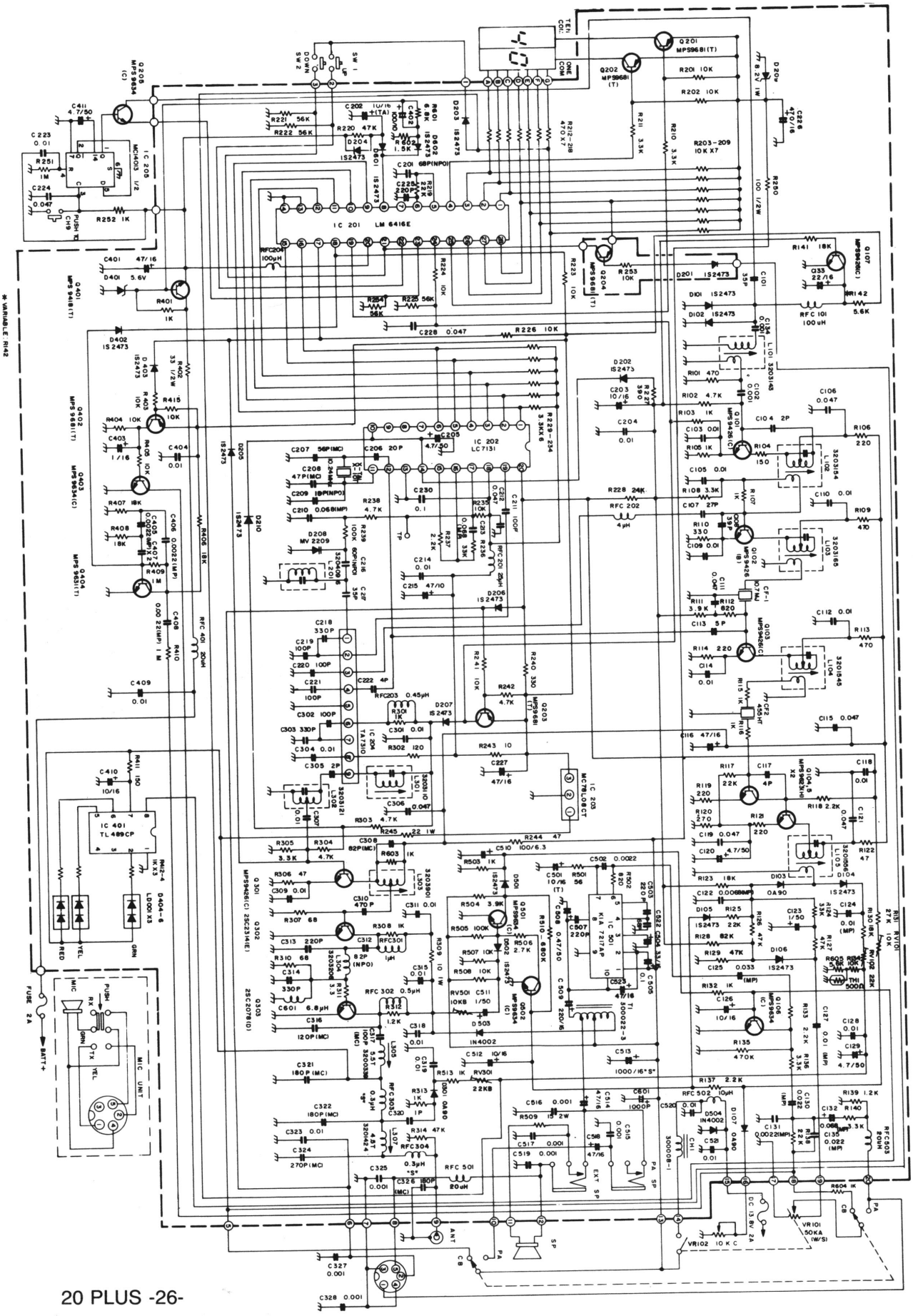

PARTS LIST 20 PLUS

SYMBOL	DESCRIPTION	PART NO.
	SPEAKER C065A20-G0062	580 080 9 001
	BOTTOM COVER SPC VINYL SHEET 147X170X0.8T	252 061 9 001
	UPPER COVER SPC VINYL SHEET 147X170X0.8T	253 140 9 001
	ESCUTCHEON (COBRA 20PLUS) ABS94HB BLK WH SILK	380 565 9 001
	LENS (FRONT) ACRYL SMOKE WHT SINK	753 027 9 001
	KNOB (UP) ABS 94HB BLK/W WHT SILK	751 323 9 001
	KNOB (DWN) ABS 94HB BLK/W SILK	751 323 9 002
	KNOB (VOL/SQ) ABS 94HB WHT DOT	751 323 9 003
Q303	XSTOR 2SC 2078(D)	172 075 9 001
IC301	I.C KIA 7217AP	307 331 9 001
D404	LED DISPLAY LD-001MG GRN	158 079 9 002
D405	LED DISPLAY LD-001VR RED	158 079 9 003
D406	LED DISPLAY LD-001YY YEL	158 079 9 004
	LED DISPLAY LTD-482G-Y	158 079 9 005
	FLAT WIRE 5 PIN 40MM	428 130 9 001
	TOUCH SW EVQ-QSR-05K	088 159 9 001
VR102	RES., VARIABLE (VR) K161110-5M1222-10KC	008 863 9 001
VR101	RES., VARIABLE (VR) K122150-50KA R01 15MM SHAFT	008 863 9 002
	3P PLUG ASSEMBLY	777 056 9 001
C206, 205, 403, 501, 502	XSTOR MSP9634(C)	176 128 9 001
C202	XSTOR MPS9426(B)	177 052 9 001
Q101, 103, 107, 301	XSTOR MPS9426(C)	176 115 9 001
Q201-204, 402	XSTOR MPS9681(T)	177 049 9 001
Q401	XSTOR MPS9418(T)	176 115 9 004
Q104, 105	XSTOR MPS9623(H)	176 125 9 001
Q404	XSTOR MPS9631(T)	176 132 9 001
Q302	XSTOR 2SC2314(E)	176 120 9 001
IC204	I.C TA7310P	307 133 9 004
IC203	I.C MC78L08CT	307 426 9 001
IC205	I.C 14013BCP	308 383 9 001
IC202	I.C LC7131	307 272 9 002
IC201	I.C LM6416E	307 426 9 002
IC401	I.C. TL 489CP	307 426 9 003

PARTS LIST 20 PLUS

SYMBOL	DESCRIPTION	PART NO.
D401	DIODE BZX83-C5V6	152 160 9 001
D209	DIODE UZP-8.2B 1W	152 160 9 002
D208	DIODE VARICAP MV2209	154 009 9 001
D101, 102, 104-106, 201-207, 210, 402, 403, 501, 502, 601	DIODE SI 1S2473	151 035 9 001
D602	DIODE 1S2473 "F" TYPE	151 059 9 001
D103, 107, 301	DIODE GE UA90	150 020 9 001
D503, 504	DIODE SI 1N4002	151 082 9 001
X101	CRYSTAL 10.240MHz HC-18/U	132 036 9 001
CF2	CERAMIC FILTER CFU 455HT	143 014 9 001
CF1	CERAMIC FILTER 10.7MJ	140 006 9 002
CH1	TRANSFORMER CHOKE	042 041 9 001
T1	TRANSFORMER OPT	042 051 9 001
RFC502	COIL RF CHOKE 10UH CORE	047 012 9 003
RFC301	COIL CHOKE 1UH BOBBIN	041 134 9 007
RFC401, 503, 501	COIL, RF CHOKE, 20μF CORE	047 039 9 002
RFC302	COIL, RF CHOKE, 0.5μF SPRING	041 134 9 004
RFC201	INDUCTOR 0.25 μH MOLD TYPE	047 012 9 001
RFC203	INDUCTOR 0.45μH MOLD TYPE	047 049 9 002
RFC101, 204	COIL CHOKE 100μH MO TYPE	047 027 9 001
RFC202	COIL CHOKE 4μH BOBBIN TYPE	047 012 9 004
RFC303, 304	COIL AM TX ANT 27MHz A	046 039 9 012
L305	COIL AM TX ANT 27MHzB	046 039 9 013
L307	COIL IFT 27MHz TX ANT TUNING -C(4.5T)	047 049 9 003
L104	COIL IFT 455kHz - A	047 049 9 004
L105	COIL IFT 455kHz - B	047 049 9 005
L301	IFT 27MHz RF AMP-A	047 039 9 006
L302	IFT AM AMP 27MHz C	047 039 9 007
L101	27MHz RX ANT	047 039 9 009
L102	27MHz RF AMP (RX)	047 039 9 010
L103	10.6MHz RF 1ST MIXER (RX)	047 039 9 011
L304	27MHz RF-C (TX)	046 039 9 012
L303	COIL RF PRE AMP TX	047 049 9 006
	RECEPTACLE ASSEMBLY (DC POWER CORD)	428 131 9 001
	MIC ASSEMBLY COBRA – PLUS	561 009 9 001
	PUSH SW HPW0208-01-010	088 155 9 002
	SECURING SCREW M6 (P=1) X 9	634 166 9 001
	BRACKET (SET MTG) APC 30X235X1.5T BLK PNTG	250 200 9 001
	MANUAL INSTRUCTION (COBRA 20PLUS)	480 499 9 001