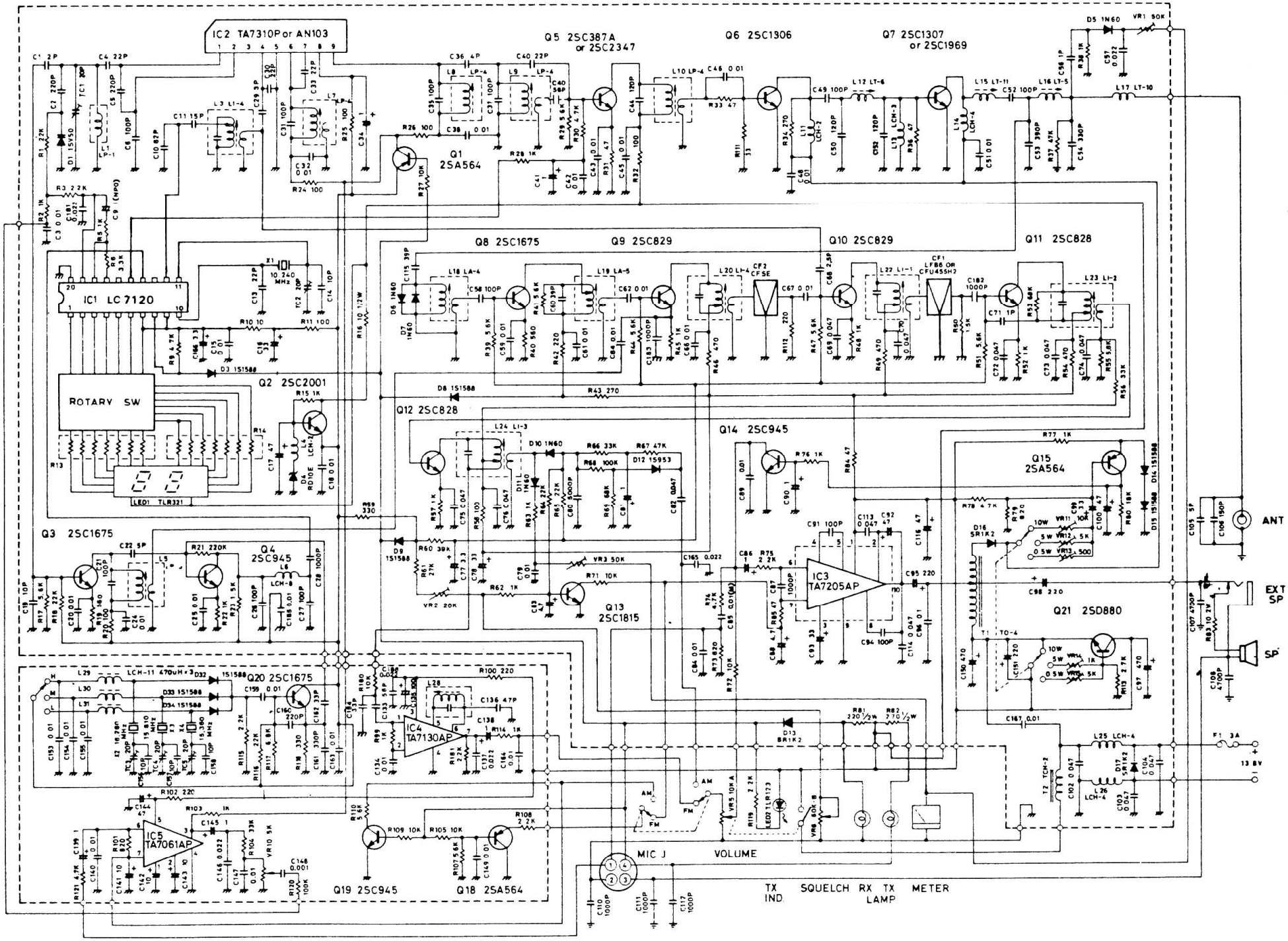HAM INTERNATIONAL UK - 120FM