B1: PH-286AB (TOP VIEW)

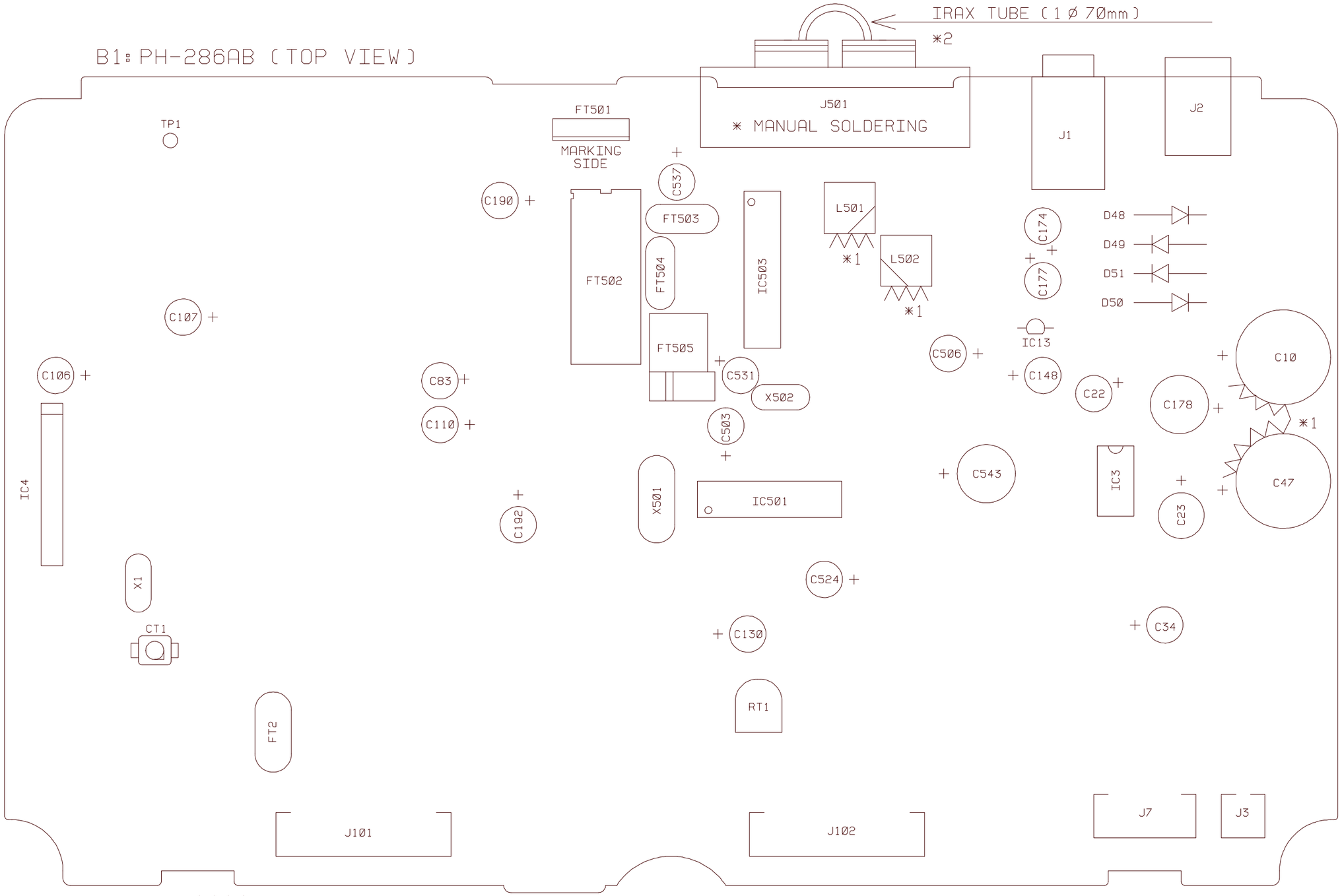

*1: YELLOW BOND LOCK

*2: IRAX TUBE cut to 70mm, and put in both terminals of J501, and lock is done.

3: Do not adjustment of the core of FT502 and FT505.

4: Make a clearance between the parts and PCB Less than 1mm.

5: Must be straight mount the C10 and C47.

REVISIONS																					
	REV. CODE	△	△	△	△	△	△	△	△	△	△	△	△	△	△	△	△	△	△	△	△
	DATE																				
	LOT#/RN#																				
	REVISED BY																				
	CHECKED BY																				

DESIGN. BY	DRAWN. BY	UNIDEN NO.	MODEL NO.
'01. 7. 16	'01. 10. 2	UB-304AL	UBC278CLT
Y. HOSHI	Y. HOSHI	TITLE MAIN ASS'Y	
CHECK. BY	APPRO. BY	PARTS ASS'Y TOP VIEW 1/2	
		DRAWING NO.	
REV. NO.		UNIDEN CORP.	

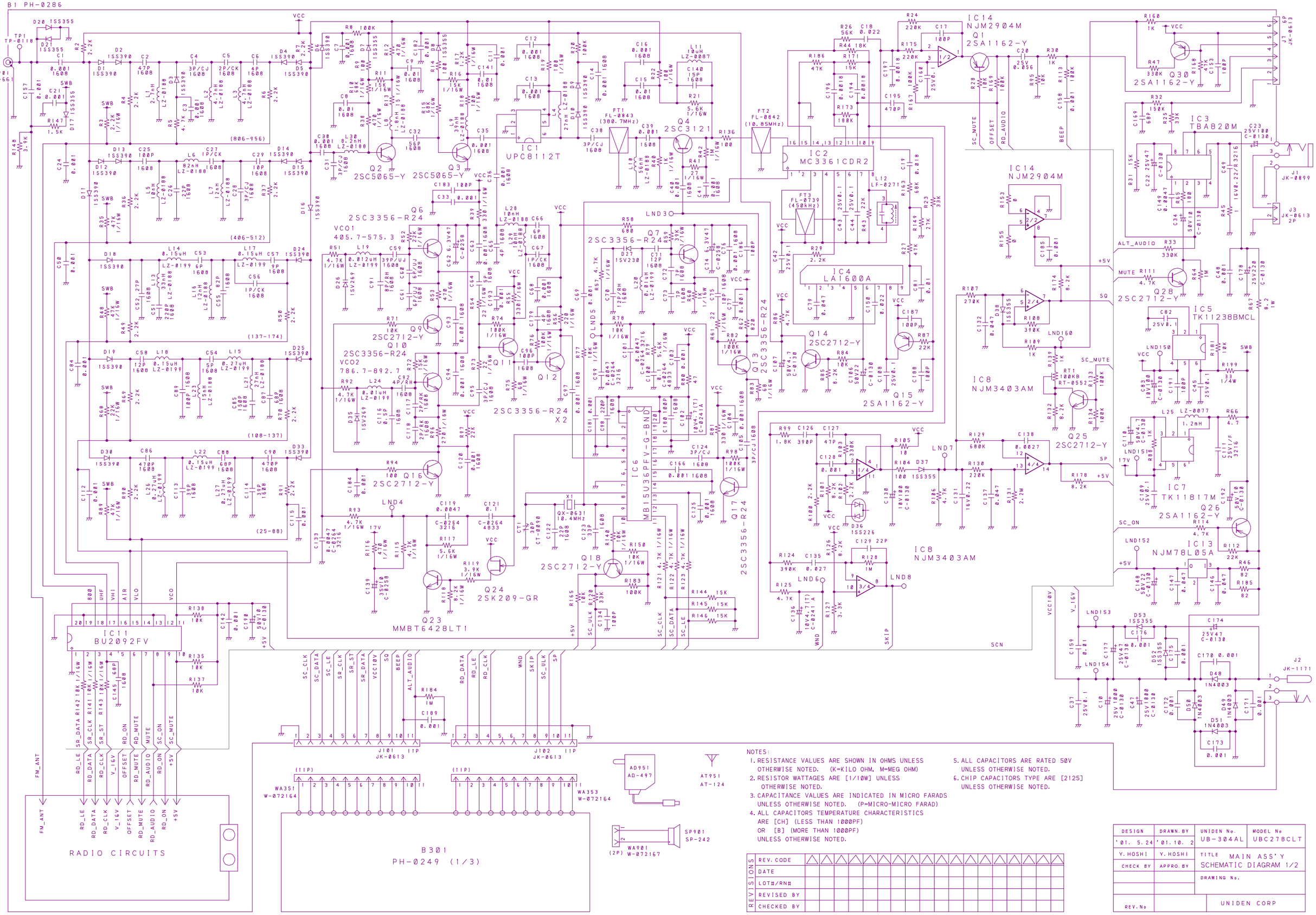
B1 PH-0286
IC1 UPC8112T
IC2 MC3361CDR2
IC3 TBA820M
IC4 LA1600A
IC5 TK11238BMCL
IC7 TK11817M
IC8 NJM3403AM
IC11 BU2092FV
IC13 NJM78L05A
IC14 NJM2904M
IC6 MB15U36PFV-G-BND
Q4 2SC3121
Q23 MMBT6428LT1
Q24 2SK209-GR
Q25 2SC2712-Y
Q26 2SA1162-Y
Q28 2SC2712-Y
Q30 2SA1162-Y
VCO1 405.7-575.3
VCO2 786.7-892.7
B301 PH-0249 (1/3)
RADIO CIRCUITS
NOTES:
1. RESISTANCE VALUES ARE SHOWN IN OHMS UNLESS OTHERWISE NOTED. (K=KILO OHM, M=MEG OHM)
2. RESISTOR WATTAGES ARE [1/10W] UNLESS OTHERWISE NOTED.
3. CAPACITANCE VALUES ARE INDICATED IN MICRO FARADS UNLESS OTHERWISE NOTED. (P=MICRO-MICRO FARAD)
4. ALL CAPACITORS TEMPERATURE CHARACTERISTICS ARE [CH] (LESS THAN 1000PF) OR [B] (MORE THAN 1000PF) UNLESS OTHERWISE NOTED.
5. ALL CAPACITORS ARE RATED 50V UNLESS OTHERWISE NOTED.
6. CHIP CAPACITORS TYPE ARE [2125] UNLESS OTHERWISE NOTED.
DESIGN '01. 5. 24
DRAWN. BY '01. 10. 2
UNIDEN No. UB-304AL
MODEL No UBC278CLT
Y. HOSHI
CHECK BY
APPRO. BY
TITLE MAIN ASS'Y SCHEMATIC DIAGRAM 1/2
DRAWING No.
REV. No
UNIDEN CORP
REVISIONS
REV. CODE
DATE
LOT#/RN#
REVISED BY
CHECKED BY

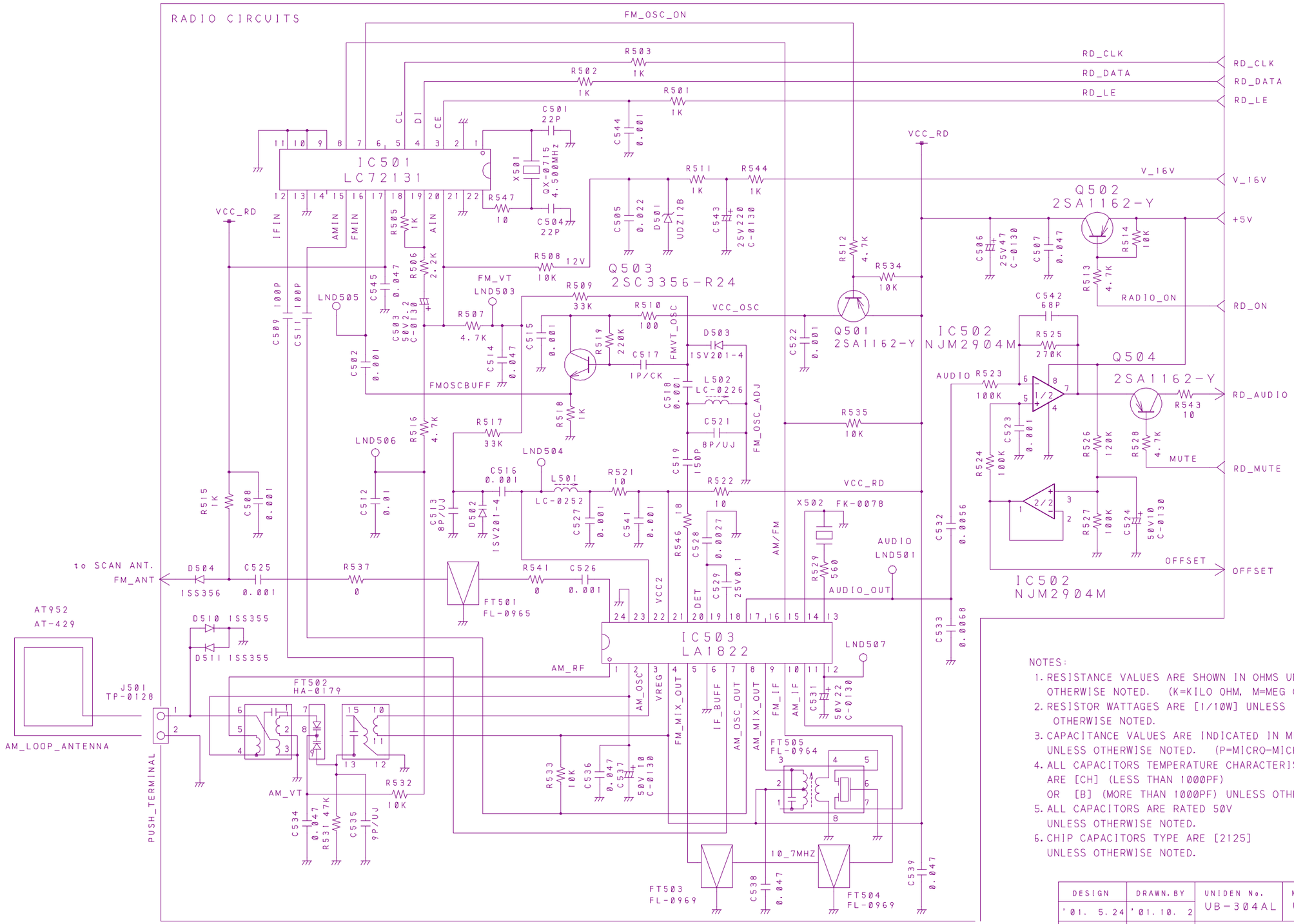

NOTES:

1. RESISTANCE VALUES ARE SHOWN IN OHMS UNLESS OTHERWISE NOTED. (K=KILO OHM, M=MEG OHM)
2. RESISTOR WATTAGES ARE [1/10W] UNLESS OTHERWISE NOTED.
3. CAPACITANCE VALUES ARE INDICATED IN MICRO FARADS UNLESS OTHERWISE NOTED. (P=MICRO-MICRO FARAD)
4. ALL CAPACITORS TEMPERATURE CHARACTERISTICS ARE [CH] (LESS THAN 1000PF) OR [B] (MORE THAN 1000PF) UNLESS OTHERWISE NOTED.
5. ALL CAPACITORS ARE RATED 50V UNLESS OTHERWISE NOTED.
6. CHIP CAPACITORS TYPE ARE [2125] UNLESS OTHERWISE NOTED.

REVISIONS																		
	REV. CODE	△	△	△	△	△	△	△	△	△	△	△	△	△	△	△	△	△
	DATE																	
	LOT#/RN#																	
	REVISED BY																	
	CHECKED BY																	

DESIGN	DRAWN. BY	UNIDEN No.	MODEL No.
'01. 5. 24	'01. 10. 2	UB-304AL	UBC278CLT
Y. HOSHI	Y. HOSHI	TITLE MAIN ASS'Y SCHEMATIC DIAGRAM 2/2	
CHECK. BY	APPRO. BY		
		DRAWING No.	
REV. No		UNIDEN CORP.	

B301 PH-0249 (1/3)

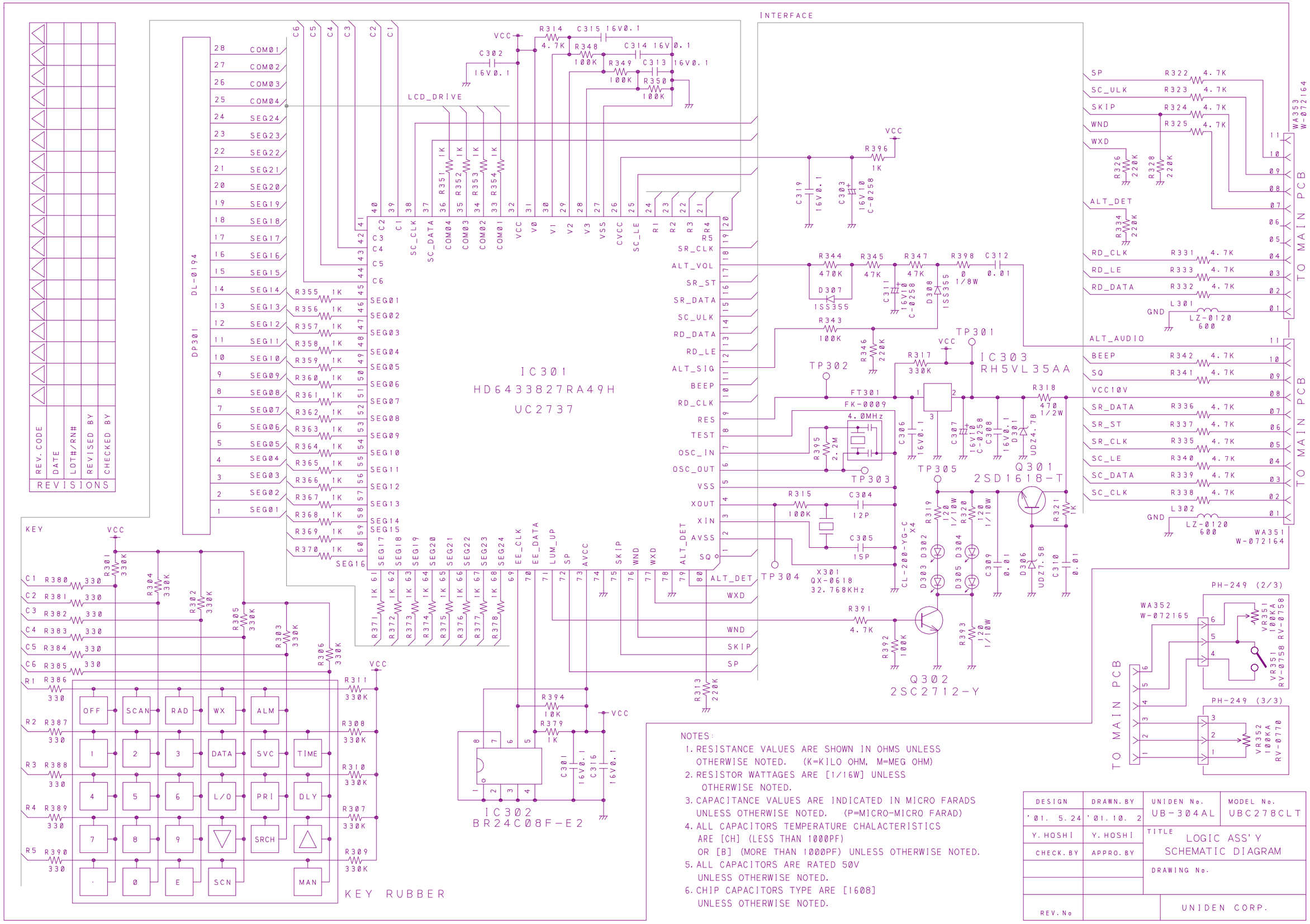

NOTES:

1. RESISTANCE VALUES ARE SHOWN IN OHMS UNLESS OTHERWISE NOTED. (K=KILO OHM, M=MEG OHM)
2. RESISTOR WATTAGES ARE [1/16W] UNLESS OTHERWISE NOTED.
3. CAPACITANCE VALUES ARE INDICATED IN MICRO FARADS UNLESS OTHERWISE NOTED. (P=MICRO-MICRO FARAD)
4. ALL CAPACITORS TEMPERATURE CHALACTERISTICS ARE [CH] (LESS THAN 1000PF) OR [B] (MORE THAN 1000PF) UNLESS OTHERWISE NOTED.
5. ALL CAPACITORS ARE RATED 50V UNLESS OTHERWISE NOTED.
6. CHIP CAPACITORS TYPE ARE [1608] UNLESS OTHERWISE NOTED.

DESIGN	DRAWN. BY	UNIDEN No.	MODEL No.
'01. 5.24	'01. 10. 2	UB-304AL	UBC278CLT
Y. HOSHI	Y. HOSHI	TITLE LOGIC ASS'Y SCHEMATIC DIAGRAM	
CHECK. BY	APPRO. BY		
		DRAWING No.	
REV. No		UNIDEN CORP.	

C10	25V 1000 C-0130
C22	25V 47 C-0130
C23	25V 100 C-0130
C34	50V 10 C-0130
C47	25V 1000 C-0130
C83	10V 100 C-0130
C106	50V 22 C-0130
C107	50V 4.7 C-0130
C110	50V 4.7 C-0130
C130	10V 100 C-0130
C148	50V 22 C-0130
C174	25V 47 C-0130
C177	25V 47 C-0130
C178	25V 220 C-0130
C190	50V 10 C-0130
C192	50V 10 C-0130
C503	50V 2.2 C-0130
C506	25V 47 C-0130
C524	50V 10 C-0130
C531	50V 22 C-0130
C537	50V 10 C-0130
C543	25V 220 C-0130

CT1	30P CT-0090

D48	1N4003
D49	1N4003
D50	1N4003
D51	1N4003

FT2	FL-0842
FT501	FL-0965
FT502	HA-0179
FT503	FL-0969

FT504	FL-0969
FT505	FL-0964

IC3	TBA820M
IC4	LA1600A
IC13	NJM78L05A
IC501	LC72131
IC503	LA1822

J1	JK-0899 3P
J2	JK-1171 3P
J3	JK-0613 2P
J7	JK-0613 6P
J101	JK-0613 11P
J102	JK-0613 11P
J501	TP-0128

L501	LC-0252
L502	LC-0226

RT1	100KB RT-0552

TP1	TP-0118

X1	10.4MHz QX-0631

X501	4.500MHz QX-0715
X502	FK-0078

NOTES:
1. RESISTANCE VALUES ARE SHOWN IN OHMS UNLESS OTHERWISE NOTED. (K-KILO OHM. M-MEG OHM.)
2. RESISTOR WATTAGES ARE 1/10W UNLESS OTHERWISE NOTED.
3. CAPACITANCE VALUES ARE INDICATED IN MICRO FARADS UNLESS OTHERWISE NOTED. (P-MICRO-MICRO FARAD)
4. ALL CAPACITORS TEMPERATURE CHARACTERISTICS ARE CH (LESS THAN 1000PF) OR B (MORE THAN 1000PF) UNLESS OTHERWISE NOTED.
5. ALL CAPACITORS ARE RATED 50V UNLESS OTHERWISE NOTED.
6. ALL CAPACITORS SIZE ARE 2125 UNLESS OTHERWISE NOTED.
7. CHIP PARTS ARE NOT SPECIFIED IN THIS DRAWING PLEASE REFER TO THE PARTS LIST FOR THE CHIP PARTS.

DESIGN.BY	DRAWN.BY	UNIDEN NO.	MODEL NO.
	01/10/02	UB-304AL	UBC278CLT
	Y.HOSHI	TITLE MAIN ASS'Y	
CHECK.BY	APPRO.BY	PARTS ASS'Y TOP VIEW 2/2	
		DRAWING NO.	
REV. NO.		UNIDEN CORP.	

B1: PH-286AB (TOP VIEW)

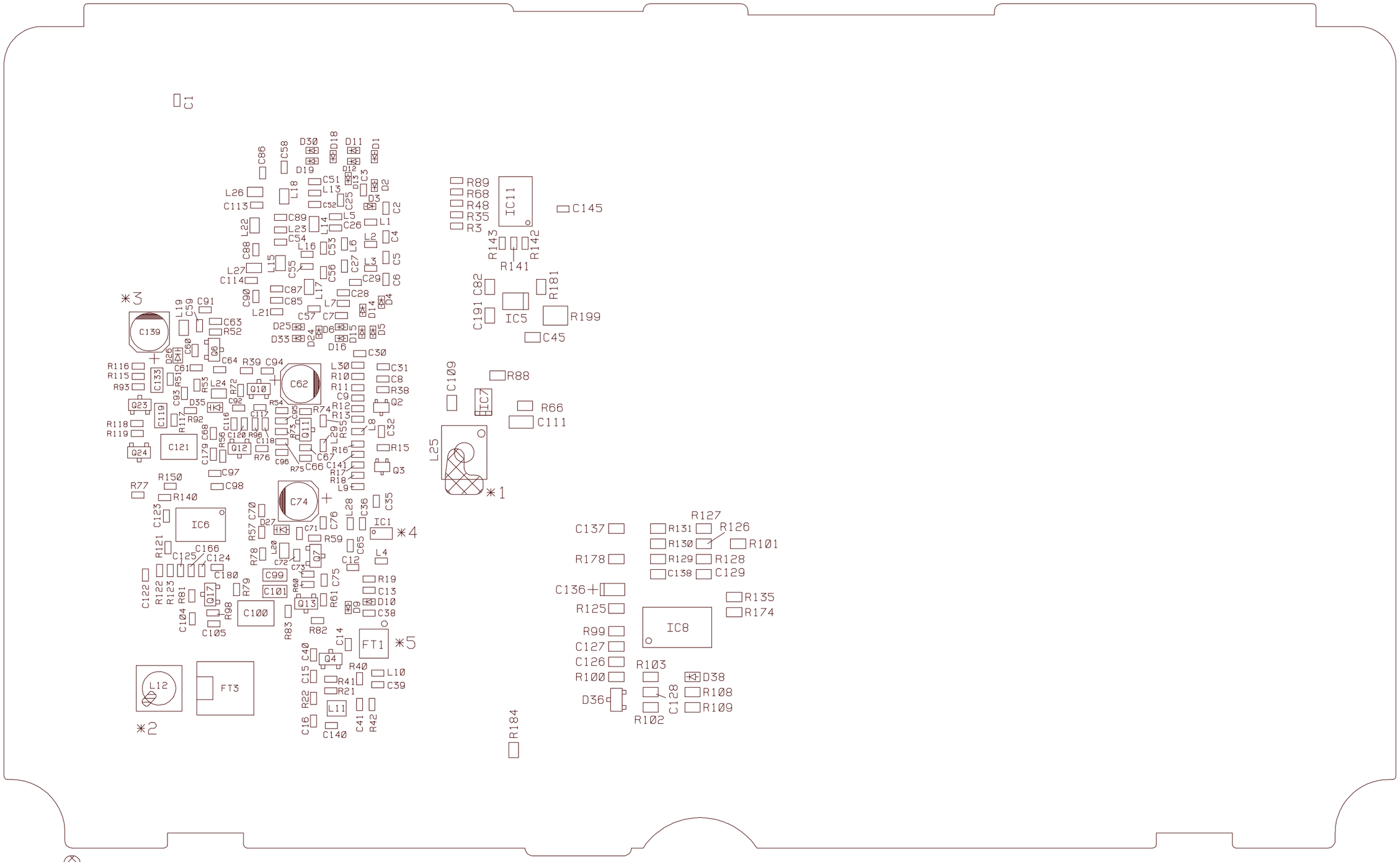

*1: YELLOW BOND LOCK

*2: SCREW LOCK (GREEN)

*3: BOND LOCK (#1222C)

*4: IC1

*5: FT1

REVISIONS																					
	REV. CODE	△	△	△	△	△	△	△	△	△	△	△	△	△	△	△	△	△	△	△	△
	DATE																				
	LOT#/RN#																				
	REVISED BY																				
	CHECKED BY																				

DESIGN. BY	DRAWN. BY	UNIDEN NO.	MODEL NO.
'01. 7.16	'01.10. 2	UB-304AL	UBC278CLT
Y. HOSHI	Y. HOSHI	TITLE MAIN ASS'Y	
CHECK. BY	APPRO. BY	CHIP LAYOUT TOP VIEW 1/2	
		DRAWING NO.	
REV. NO.		UNIDEN CORP.	

C1	0.001 1608
C2	47P 1608
C3	0.001 1608
C4	3P/CJ 1608
C5	2P/CK 1608
C6	4P 1608
C7	0.001 1608
C8	0.01 1608
C9	0.01 1608
C12	0.001 1608
C13	0.001 1608
C14	0.001 1608
C15	0.01 1608
C16	0.001 1608
C25	100P 1608
C26	22P 1608
C27	1P/CK 1608
C28	3P/CJ 1608
C29	10P 1608
C30	0.001 1608
C31	3P/CJ 1608
C32	56P 1608
C35	0.001 1608
C36	0.001 1608
C38	3P/CJ 1608
C39	0.001 1608
C40	0.001 1608
C41	0.001 1608
C45	0.1 25V
C51	220P 1608
C52	27P 1608
C53	6P 1608
C54	5P 1608
C55	82P 1608
C56	1P/CK 1608
C57	9P 1608
C58	12P 1608
C59	39P/UJ 1608
C60	6P/UJ 1608
C61	6P/UJ 1608
C62	6.3V 47 C-0258
C63	0.001 1608
C64	5P 1608
C65	4P 1608
C66	6P 1608
C67	1P/CK 1608
C68	0.001 1608
C70	12P/RH 1608
C71	12P 1608
C72	7P 1608
C73	7P 1608
C74	6.3V 47 C-0258
C75	10P 1608
C76	0.001 1608
C82	0.1 25V
C85	150P 1608
C86	470P 1608
C87	68P 1608
C88	68P 1608
C89	100P 1608
C90	470P 1608
C91	8P/RH 1608
C92	4P/RH 1608
C93	0.001 1608
C94	0.001 1608
C95	3P/CJ 1608
C96	100P 1608
C97	0.001 1608
C98	220P 1608

C99	0.0047 C-0264 3216
C100	0.1 C-0264 4833
C101	0.0047 C-0264 3216
C104	0.001 1608
C105	3P/CJ 1608
C109	0.1 25V
C111	1/F 25V 3216
C113	39P 1608
C114	39P 1608
C116	0.5P 1608
C117	2P/RK 1608
C118	2P/RK 1608
C119	0.0047 C-0264 3216
C120	0.001 1608
C121	0.1 C-0264 4833
C122	22P 1608
C123	33P 1608
C124	3P/CJ 1608
C125	0.001 1608
C126	390P
C127	47P
C128	0.001
C129	22P
C133	0.0047 C-0264 3216
C136	10V 4.7(T) C-0241 A
C137	0.047
C138	0.0027
C139	35V 10 C-0258
C140	15P 1608
C141	0.01 1608
C145	68P 1608
C166	0.001 1608
C179	4P 1608
C180	100P 1608
C191	100P

D1	1SS390
D2	1SS390
D3	1SS390
D4	1SS390
D5	1SS390
D6	1SS390
D9	1SS390
D10	1SS390
D11	1SS390
D12	1SS390
D13	1SS390
D14	1SS390
D15	1SS390
D16	1SS390
D18	1SS390
D19	1SS390
D24	1SS390
D25	1SS390
D26	1SV269
D27	1SV230
D30	1SS390
D33	1SS390
D35	1SV269
D36	1SS226
D38	1SS355

FT1	FL-0843
FT3	FL-0739

IC1	UPC8112T
IC5	TK11238BMCL
IC6	MB15U36PFV-G-BND
IC7	TK11806M
IC8	NJM3403AM
IC11	BU2092FV

L1	2.7nH LZ-0188
L2	4.7nH LZ-0188
L3	4.7nH LZ-0188
L4	27nH LZ-0188
L5	10nH LZ-0188
L6	82nH LZ-0188
L7	12nH LZ-0188
L8	1.8nH LZ-0188
L9	39nH LZ-0188
L10	56nH LZ-0188
L11	10uH LZ-0087
L12	LF-0271
L13	33nH LZ-0188
L14	0.15uH LZ-0199
L15	0.27uH LZ-0199
L16	12nH LZ-0188
L17	0.15uH LZ-0199
L18	0.15uH LZ-0199
L19	0.012uH LZ-0199
L20	0.01uH LZ-0199
L21	27nH LZ-0188
L22	0.15uH LZ-0199
L23	15nH LZ-0188
L24	0.01uH LZ-0199
L25	1.2mH LZ-0077
L26	0.27uH LZ-0199
L27	0.27uH LZ-0199
L28	10nH LZ-0188
L29	10nH LZ-0188
L30	8.2nH LZ-0188

Q2	2SC5065-Y
Q3	2SC5065-Y
Q4	2SC3121
Q6	2SC3356-R24
Q7	2SC3356-R24
Q10	2SC3356-R24
Q11	2SC3356-R24
Q12	2SC3356-R24
Q13	2SC3356-R24
Q17	2SC3356-R24
Q23	MMBT6428LT1
Q24	2SK209-GR

R3	2.2K 1/16W
R10	68K 1/16W
R11	15K 1/16W
R12	470 1/16W
R13	15 1/16W
R15	68K 1/16W
R16	15K 1/16W
R17	1.2K 1/16W
R18	100 1/16W
R19	100 1/16W
R21	5.6K 1/16W
R22	100 1/16W
R35	47K 1/16W
R38	470 1/16W
R39	330 1/16W
R40	1K 1/16W
R41	27 1/16W
R42	1M 1/16W
R48	47K 1/16W
R51	4.7K 1/16W
R52	22K 1/16W
R53	470 1/16W
R54	22 1/16W
R55	330 1/16W
R56	220 1/16W
R57	4.7K 1/16W
R59	39K 1/16W
R60	1K 1/16W
R61	22 1/16W
R66	4.7
R68	22K 1/16W
R72	15K 1/16W
R73	22 1/16W
R74	100K 1/16W
R75	68 1/16W
R76	100K 1/16W
R77	10K 1/16W
R78	10K 1/16W
R79	5.6K 1/16W
R81	330 1/16W
R82	100K 1/16W
R83	68 1/16W
R88	1K
R89	47K 1/16W
R92	4.7K 1/16W
R93	4.7K 1/16W
R96	270 1/16W
R98	100K 1/16W
R99	1.8K
R100	2.2K
R101	8.2K
R102	2.2K
R103	330K
R108	390K
R109	1K
R115	4.7K 1/16W
R116	470 1/16W
R117	5.6K 1/16W
R118	8.2K 1/16W
R119	3.9K 1/16W
R121	4.7K 1/16W
R122	4.7K 1/16W
R123	4.7K 1/16W
R125	4.7K
R126	8.2K
R127	3.3K
R128	1M
R129	680K
R130	220K

R131	2.2M
R135	10K
R140	10K 1/16W
R141	10K 1/16W
R142	10K 1/16W
R143	10K 1/16W
R150	10K 1/16W
R174	8.2K
R178	8.2K
R181	10K
R184	1M
R199	33 1/4W

NOTES:
1. RESISTANCE VALUES ARE SHOWN IN OHMS UNLESS OTHERWISE NOTED. (K-KILO OHM. M-MEG OHM.)
2. RESISTOR WATTAGES ARE 1/10W UNLESS OTHERWISE NOTED.
3. CAPACITANCE VALUES ARE INDICATED IN MICRO FARADS UNLESS OTHERWISE NOTED. (P-MICRO-MICRO FARAD)
4. ALL CAPACITORS TEMPERATURE CHARACTERISTICS ARE CH (LESS THAN 1000PF) OR B (MORE THAN 1000PF) UNLESS OTHERWISE NOTED.
5. ALL CAPACITORS ARE RATED 50V UNLESS OTHERWISE NOTED.
6. ALL CAPACITORS SIZE ARE 2125 UNLESS OTHERWISE NOTED.
7. CHIP PARTS ARE NOT SPECIFIED IN THIS DRAWING PLEASE REFER TO THE PARTS LIST FOR THE CHIP PARTS.

DESIGN.BY	DRAWN.BY	UNIDEN NO.	MODEL NO.
	01/10/02	UB-304AL	UBC278CLT
	Y.HOSHI	TITLE MAIN ASS'Y	
CHECK.BY	APPRO.BY	CHIP LAYOUT TOP VIEW 2/2	
		DRAWING NO.	
REV. NO.		UNIDEN CORP.	

B1: PH-286AB (BOTTOM VIEW)

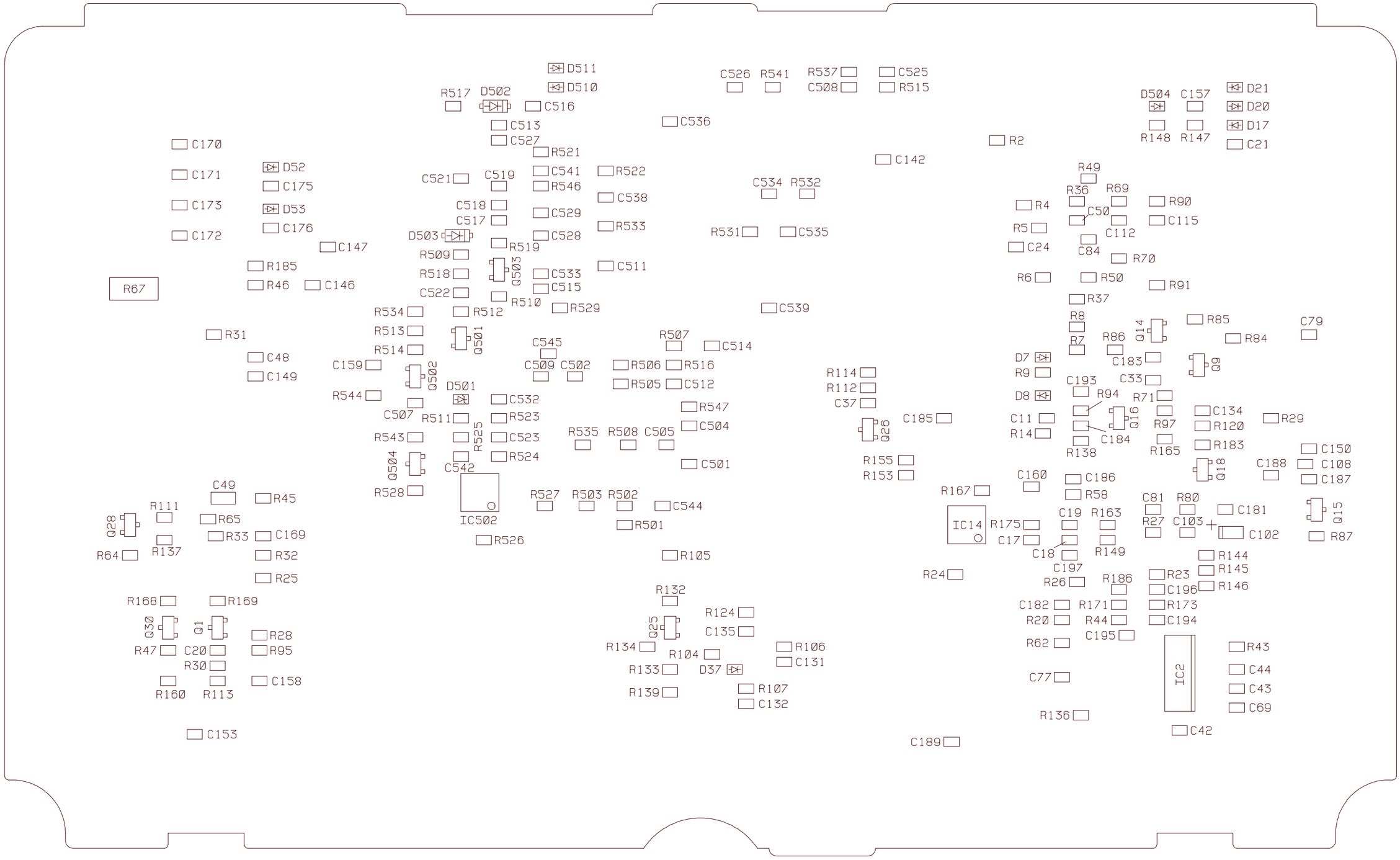

REVISIONS																					
	REV. CODE	△	△	△	△	△	△	△	△	△	△	△	△	△	△	△	△	△	△	△	△
	DATE																				
	LOT#/RN#																				
	REVISED BY																				
	CHECKED BY																				

DESIGN. BY	DRAWN. BY	UNIDEN NO.	MODEL NO.
'01. 7. 16	'01. 10. 2	UB-304AL	UBC278CLT
Y. HOSHI	Y. HOSHI	TITLE MAIN ASS'Y CHIP LAYOUT BOTTOM VIEW 1/2	
CHECK. BY	APPRO. BY		
		DRAWING NO.	
REV. NO.		UNIDEN CORP.	

C11	0.001
C17	100P
C18	0.022
C19	0.018
C20	0.056 25V
C21	0.001
C24	0.001
C33	0.001
C37	0.1 25V
C42	0.1 25V
C43	0.1 25V
C44	0.1 25V
C48	0.001
C49	0.22/R 16V 3216
C50	0.001
C69	0.001
C77	0.001
C79	0.047
C81	0.01
C84	0.001
C102	10V 4.7ITI C-0241 A
C103	0.001
C108	0.1 25V
C112	0.001
C115	0.001
C131	0.22 16V
C132	0.047
C134	100P
C135	0.027
C142	0.001
C146	0.047
C147	0.047
C149	0.0047
C150	0.022
C153	100P
C157	0.001
C158	0.001
C159	0.01
C160	0.1 25V
C169	68P
C170	0.001
C171	0.001
C172	0.001
C173	0.001
C175	0.001
C176	0.001
C181	0.001
C182	0.001
C183	100P
C184	0.001
C185	0.001
C186	100P
C187	100P
C188	100P
C189	0.001
C193	0.001
C194	0.0018
C195	470P
C196	0.0018
C197	0.0018
C501	22P
C502	0.001
C504	22P
C505	0.022
C507	0.047
C508	0.001
C509	100P
C511	100P

C512	0.01
C513	8P/UJ
C514	0.047
C515	0.001
C516	0.001
C517	1P/CK
C518	0.001
C519	150P
C521	8P/UJ
C522	0.001
C523	0.001
C525	0.001
C526	0.001
C527	0.001
C528	0.0027
C529	0.1 25V
C532	0.0056
C533	0.0068
C534	0.047
C535	9P/UJ
C536	0.047
C538	0.047
C539	0.047
C541	0.001
C542	68P
C544	0.001
C545	0.047

D7	1SS355
D8	1SS355
D17	1SS355
D20	1SS355
D21	1SS355
D37	1SS355
D52	1SS355
D53	1SS355
D501	UDZ12B
D502	1SV201-4
D503	1SV201-4
D504	1SS356
D510	1SS355
D511	1SS355

IC2	MC3361CDR2
IC14	NJM2904M
IC502	NJM2904M

Q1	2SA1162-Y
Q9	2SC2712-Y
Q14	2SC2712-Y
Q15	2SA1162-Y
Q16	2SC2712-Y
Q18	2SC2712-Y
Q25	2SC2712-Y
Q26	2SA1162-Y
Q28	2SC2712-Y
Q30	2SA1162-Y
Q501	2SA1162-Y
Q502	2SA1162-Y
Q503	2SC3356-R24

Q504	2SA1162-Y

R2	2.2K
R4	2.2K
R5	4.7K
R6	2.2K
R7	2.2K
R8	100K
R9	100
R14	100
R20	100K
R23	33K
R24	220K
R25	33K
R26	56K
R27	47K
R28	10K
R29	2.2K
R30	1K
R31	15K
R32	150K
R33	330K
R36	2.2K
R37	2.2K
R43	22K
R44	18K
R45	1
R46	82
R47	330K
R49	2.2K
R50	2.2K
R58	680
R62	820
R64	1M
R65	180
R67	8.2 1W
R69	2.2K
R70	2.2K
R71	10K
R80	47
R84	10K
R85	8.2K
R86	4.7K
R87	22K
R90	2.2K
R91	2.2K
R94	100
R95	10K
R97	22K
R104	100
R105	10
R106	4.7K
R107	270K
R111	4.7K
R112	22K
R113	100K
R114	4.7K
R120	33K
R124	390K
R132	8.2K
R133	100K
R134	100K
R136	100
R137	10K
R138	10K
R139	1K

R144	15K
R145	15K
R146	15K
R147	1.5K
R148	3.9K
R149	27K
R153	0
R155	0
R160	1K
R163	68K
R165	10K
R167	100K
R168	47K
R169	100K
R171	15K
R173	180K
R175	220K
R183	100K
R185	82
R186	47K
R501	1K
R502	1K
R503	1K
R505	1K
R506	2.2K
R507	4.7K
R508	10K
R509	33K
R510	100
R511	1K
R512	4.7K
R513	4.7K
R514	10K
R515	1K
R516	4.7K
R517	33K
R518	1K
R519	220K
R521	10
R522	10
R523	100K
R524	100K
R525	270K
R526	120K
R527	100K
R528	4.7K
R529	560
R531	47K
R532	10K
R533	10K
R534	10K
R535	10K
R537	0
R541	0
R543	10
R544	1K
R546	18
R547	10

NOTES:
1. RESISTANCE VALUES ARE SHOWN IN OHMS UNLESS OTHERWISE NOTED. (K-KILO OHM. M-MEG OHM.)
2. RESISTOR WATTAGES ARE 1/10W UNLESS OTHERWISE NOTED.
3. CAPACITANCE VALUES ARE INDICATED IN MICRO FARADS UNLESS OTHERWISE NOTED. (P-MICRO-MICRO FARAD)
4. ALL CAPACITORS TEMPERATURE CHARACTERISTICS ARE CH (LESS THAN 1000PF) OR B (MORE THAN 1000PF) UNLESS OTHERWISE NOTED.
5. ALL CAPACITORS ARE RATED 50V UNLESS OTHERWISE NOTED.
6. ALL CAPACITORS SIZE ARE 2125 UNLESS OTHERWISE NOTED.
7. CHIP PARTS ARE NOT SPECIFIED IN THIS DRAWING PLEASE REFER TO THE PARTS LIST FOR THE CHIP PARTS.

DESIGN.BY	DRAWN.BY	UNIDEN NO.	MODEL NO.
	01/10/02	UB-304AL	UBC278CLT
	Y.HOSHI	TITLE MAIN ASS'Y	
CHECK.BY	APPRO.BY	CHIP LAYOUT BOTTOM VIEW 2/2	
		DRAWING NO.	
REV. NO.		UNIDEN CORP.	

B301: PH-249AA (BOTTOM VIEW)

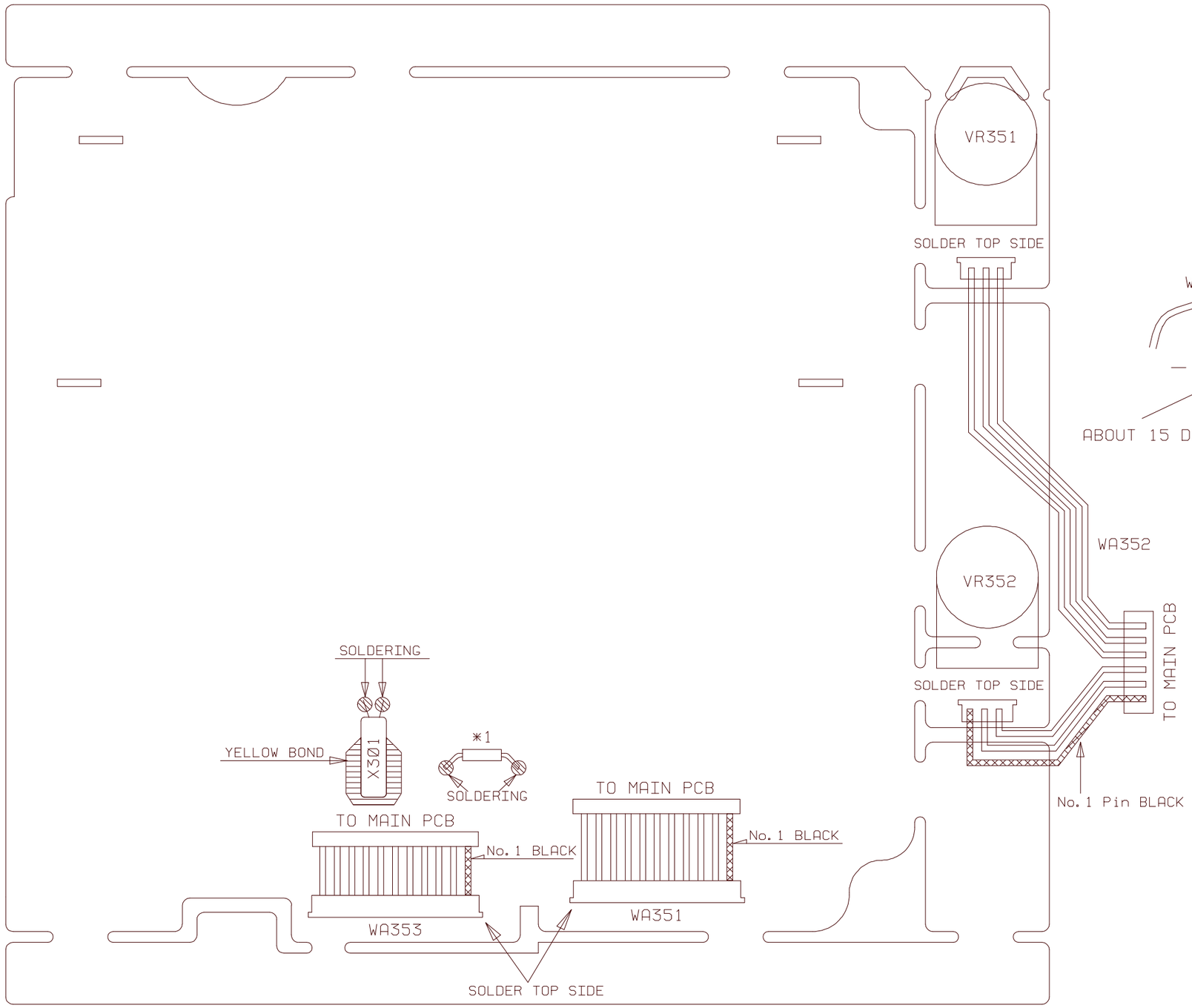

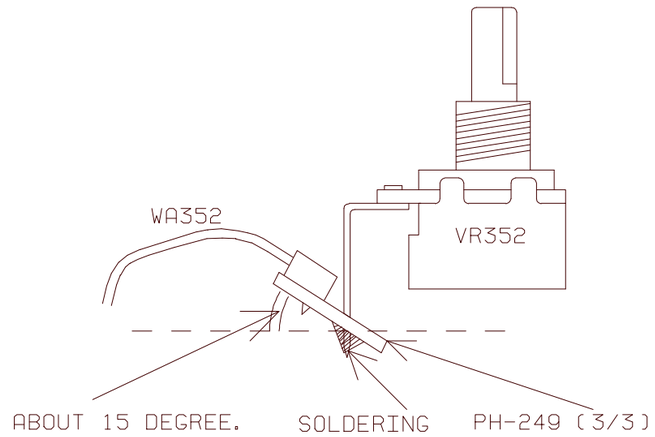

VR351	100KA RV-0758
VR352	100KA RV-0770

WA351	W-072164
WA352	W-072165
WA353	W-072164

X301	32.768KHz QX-0618

*1

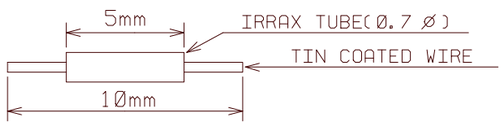

Peel off resist. Then manual soldering.

REVISIONS																					
	REV. CODE	△	△	△	△	△	△	△	△	△	△	△	△	△	△	△	△	△	△	△	△
	DATE																				
	LOT#/RN#																				
	REVISED BY																				
	CHECKED BY																				

DESIGN. BY	DRAWN. BY	UNIDEN NO.	MODEL NO.
'01. 7.16	'01.10. 2	UB-304AL	UBC278CLT
Y. HOSHI	Y. HOSHI	TITLE LOGIC ASS'Y	
CHECK. BY	APPRO. BY	PARTS ASS'Y BOTTOM VIEW	
		DRAWING NO.	
REV. NO.		UNIDEN CORP.	

B301: PH-249AA (TOP VIEW)

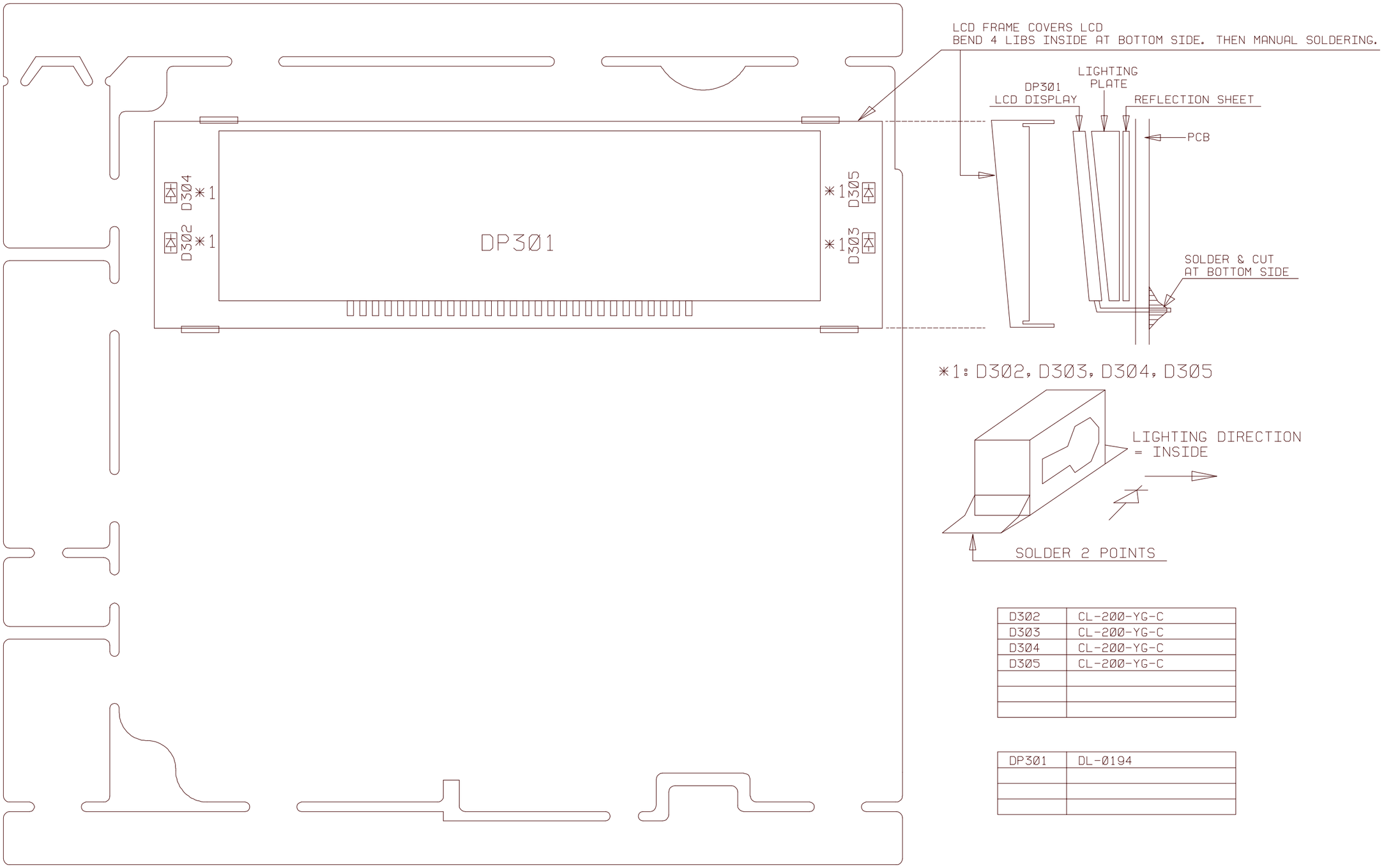

D302	CL-200-YG-C
D303	CL-200-YG-C
D304	CL-200-YG-C
D305	CL-200-YG-C

DP301	DL-0194

REVISIONS																					
	REV. CODE	△	△	△	△	△	△	△	△	△	△	△	△	△	△	△	△	△	△	△	△
	DATE																				
	LOT#/RN#																				
	REVISED BY																				
	CHECKED BY																				

DESIGN. BY	DRAWN. BY	UNIDEN NO.	MODEL NO.
'01. 7. 16	'01. 10. 2	UB-304AL	UBC278CLT
Y. HOSHI	Y. HOSHI	TITLE LOGIC ASS'Y	
CHECK. BY	APPRO. BY	PARTS ASS'Y TOP VIEW	
		DRAWING NO.	
REV. NO.		UNIDEN CORP.	

B301: PH-249AA (BOTTOM VIEW)

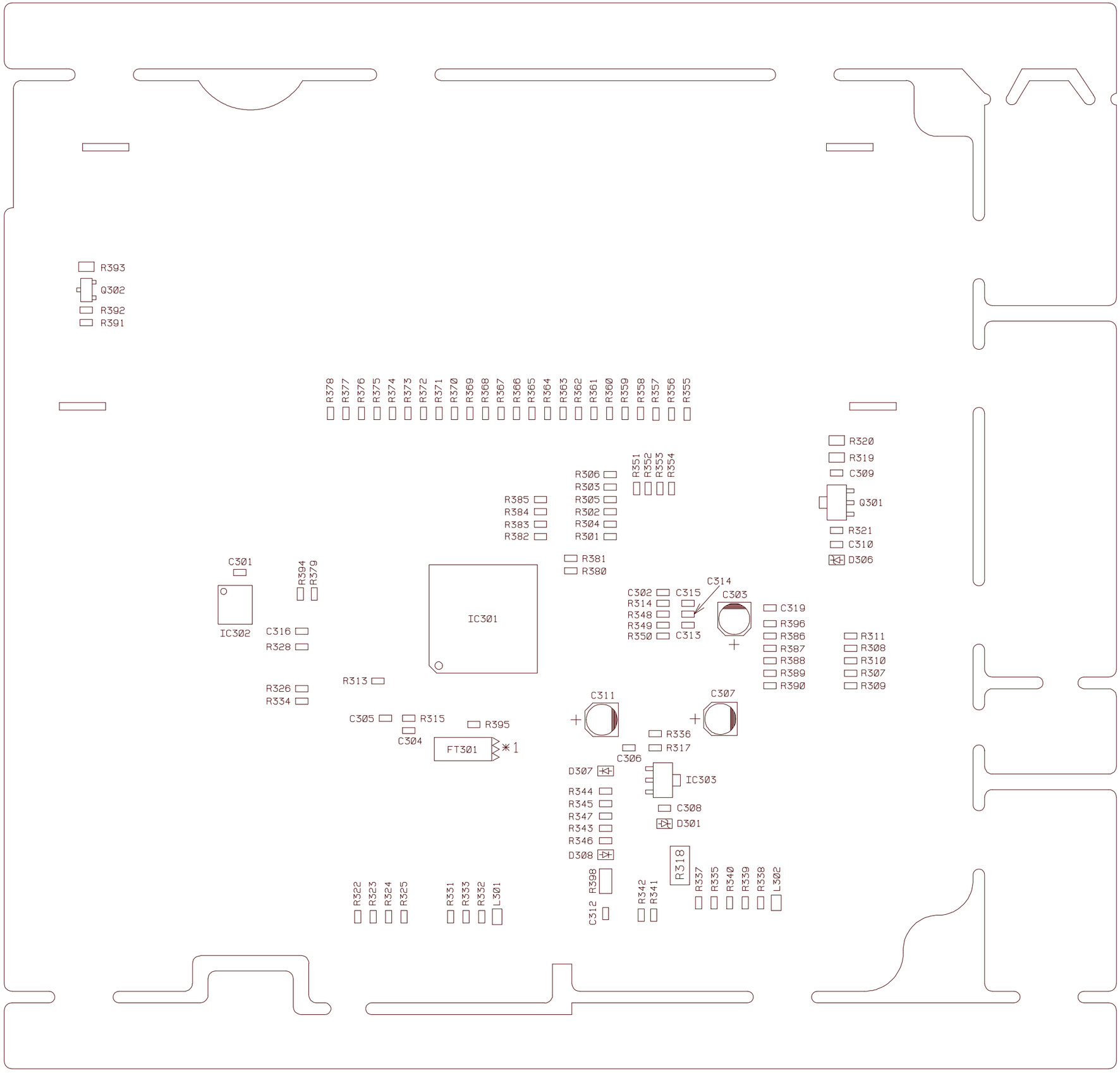

REVISIONS	
REV. CODE	
DATE	
LOT#/RN#	
REVISED BY	
CHECKED BY	

*1: YELLOW BOND LOCK

DESIGN. BY	DRAWN. BY	UNIDEN NO.	MODEL NO.
'01. 7. 16	'01. 10. 2	UB-304AL	UBC278CLT
Y. HOSHI	Y. HOSHI	TITLE LOGIC ASS'Y	
CHECK. BY	APPRO. BY	CHIP LAYOUT BOTTOM VIEW 1/2	
		DRAWING NO.	
REV. NO.		UNIDEN CORP.	

C301	0.1 16V
C302	0.1 16V
C303	16V 10 C-0258
C304	12P
C305	15P
C306	0.1 16V
C307	16V 10 C-0258
C308	0.1 16V
C309	0.01
C310	0.01
C311	16V 10 C-0258
C312	0.01
C313	0.1 16V
C314	0.1 16V
C315	0.1 16V
C316	0.1 16V
C319	0.1 16V

D301	UDZ4.7B
D306	UDZ7.5B
D307	1SS355
D308	1SS355

FT301	FK-0009

IC301	HD6433827RA49H UC2737
IC302	BR24C08F
IC303	RH5VL35AA

L301	600 LZ-0120

L302	600 LZ-0120

Q301	2SD1618-T
Q302	2SC2712-Y

R301	330K
R302	330K
R303	330K
R304	330K
R305	330K
R306	330K
R307	330K
R308	330K
R309	330K
R310	330K
R311	330K
R313	220K
R314	4.7K
R315	100K
R317	330K
R318	470 1/2W
R319	120 1/10W
R320	120 1/10W
R321	1K
R322	4.7K
R323	4.7K
R324	4.7K
R325	4.7K
R326	220K
R328	220K
R331	4.7K
R332	4.7K
R333	4.7K
R334	220K
R335	4.7K
R336	4.7K
R337	4.7K

R338	4.7K
R339	4.7K
R340	4.7K
R341	4.7K
R342	4.7K
R343	100K
R344	470K
R345	47K
R346	220K
R347	47K
R348	100K
R349	100K
R350	100K
R351	1K
R352	1K
R353	1K
R354	1K
R355	1K
R356	1K
R357	1K
R358	1K
R359	1K
R360	1K
R361	1K
R362	1K
R363	1K
R364	1K
R365	1K
R366	1K
R367	1K
R368	1K
R369	1K
R370	1K
R371	1K
R372	1K
R373	1K
R374	1K
R375	1K
R376	1K
R377	1K
R378	1K
R379	1K
R380	330

R381	330
R382	330
R383	330
R384	330
R385	330
R386	330
R387	330
R388	330
R389	330
R390	330
R391	4.7K
R392	100K
R393	120 1/10W
R394	10K
R395	2.2M
R396	1K
R398	0 1/8W

NOTES:
1. RESISTANCE VALUES ARE SHOWN IN OHMS UNLESS OTHERWISE NOTED. (K-KILO OHM. M-MEG OHM.)
2. RESISTOR WATTAGES ARE 1/16W UNLESS OTHERWISE NOTED.
3. CAPACITANCE VALUES ARE INDICATED IN MICRO FARADS UNLESS OTHERWISE NOTED. (P-MICRO-MICRO FARAD)
4. ALL CAPACITORS TEMPERATURE CHARACTERISTICS ARE CH (LESS THAN 1000PF) OR B (MORE THAN 1000PF) UNLESS OTHERWISE NOTED.
5. ALL CAPACITORS ARE RATED 50V UNLESS OTHERWISE NOTED.
6. ALL CAPACITORS SIZE ARE 1608 UNLESS OTHERWISE NOTED.
7. CHIP PARTS ARE NOT SPECIFIED IN THIS DRAWING PLEASE REFER TO THE PARTS LIST FOR THE CHIP PARTS.

DESIGN.BY	DRAWN.BY	UNIDEN NO.	MODEL NO.
	01/10/02	UB-304AL	UBC278CLT
	Y.HOSHI	TITLE LOGIC ASS'Y	
CHECK.BY	APPRO.BY	CHIP LAYOUT BOTTOM VIEW 2/2	
		DRAWING NO.	
REV. NO.		UNIDEN CORP.	