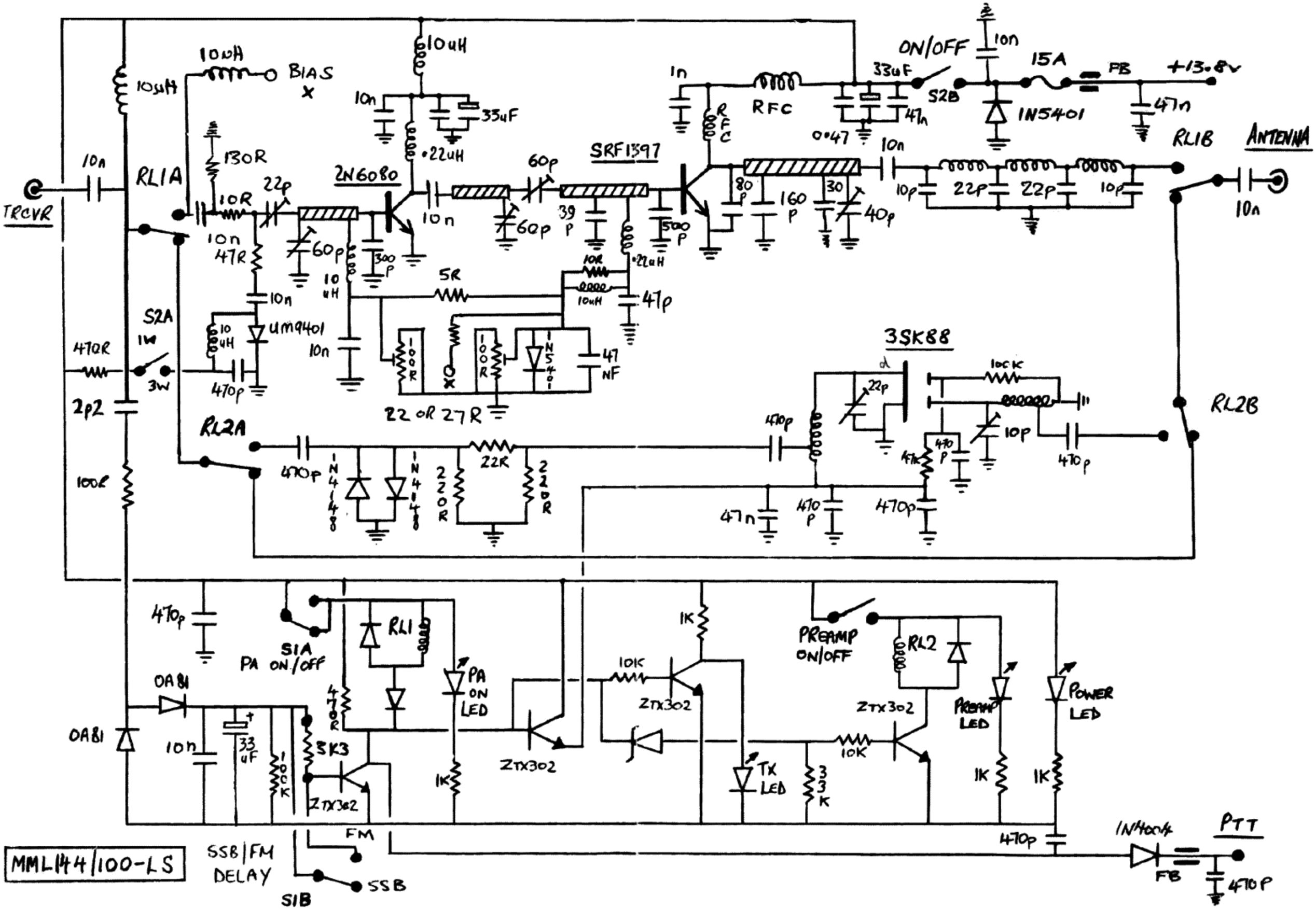
TRCVR
RL1A
10uH
BIAS
130R
10R
22p
2N6080
10uH
33uF
.22uH
60p
SRF1897
39 p
500 p
RFC
ON/OFF
33uF
S2B
15A
FB
+13.8v
IN5401
47n
0.47
RL1B
ANTENNA
80 p
160 p
30
40p
10p
22p
22p
10p
10n
47R
5R
10uH
47p
S2A
1W
3W
470R
2p2
470p
um9401
100R
NE 401
47 NF
22 OR 27R
3SK88
10CK
10p
470 p
47k
470p
RL2A
470p
IN4148
22K
220R
220R
100Ω
47n
470 p
470p
470p
RL1
SIA
PA ON/OFF
PA ON LED
OA81
OA81
10n
33 uF
100 K
3K3
ZTX302
FM
SSB/FM DELAY
SIB
SSB
1K
ZTX302
10K
ZTX302
TX LED
3 3 K
PREAMP ON/OFF
RL2
ZTX302
10K
PREAMP LED
POWER LED
1K
1K
470p
1N4004
PTT
FB
470P
MML144/100-LS